EVO-9500A

SERVICE MANUAL

US Model
Canadian Model

SPECIFICATIONS

System

Video recording system	Rotary two-head flying erase head Herical scanning FM system
Audio recording system	Standard: Rotary head FM system (monaural) PCM: PCM system (2 channels)
Video signal	NTSC color, EIA standards
Usable cassettes	8 mm format video cassettes
Tape speed	Approx. 1.43cm/sec. (SP mode)
Maximum recording/ playback time	2 hours (SP mode) (with Sony P6-120MP 8mm video cassette)
Fast-forward and rewind time	Approx. 3 min. (with Sony P6-90MP 8mm video cassette)

Inputs and Outputs

Video input	VIDEO IN (1) BNC connector Input signal: 1 Vp-p, 75 ohms, unbalanced, sync negative
S VIDEO input	S VIDEO IN (1) 4-pin mini-DIN Luminance signal: 1 Vp-p, 75 ohms, unbalanced, sync negative Chrominance signal: 0.286 Vp-p, 75 ohms, unbalanced
Video output	VIDEO OUT, BNC connector (1), phono jack (1) Output signal: 1 Vp-p, 75 ohms, unbalanced, sync negative
S VIDEO output	S VIDEO OUT (1) 4-pin, mini-DIN Luminance signal: 1 Vp-p, 75 ohms, unbalanced, sync negative Chrominance signal: 0.286 Vp-p, 75 ohms, unbalanced
Horizontal resolution	Standard system: 240 lines (SP color mode) Hi8 system: 400 lines
Video S/N	More than 45 dB (Color mode)
Audio input	AUDIO IN (2) phono jack Input level: −7.5 dBs (0dBs = 0.775 Vrms) Input impedance: more than 47 kilohms
Audio output	AUDIO OUT Stereo output: phono jack (2) Standard impedance: −7.5 dBs at load impedance 47 kilohms monaural output: phono jack (1) Standard impedance: −5 dBs at load impedance 47 kilohms Output impedance: less than 2.2 kilohms

— Continued on next page —

Hi8 VIDEO CASSETTE RECORDER

SONY®

MICROFILM

Frequency response	Standard track: 30Hz-15kHz PCM track: 20Hz-15kHz
Audio S/N	More than 60 dB (SP mode)
Microphone input (monaural)	MIC (1) minijack −65 dBs, for low-impedance microphone
Headphones output	HEADPHONES (1) stereo minijack for headphones
External sync input	VIDEO IN (BNC connector, used also as a video input) Input signal: 1 Vp-p, video signal
CONTROL P input	Phono jack (1) Input impedance: 47 kilohms
CONTROL P output	Phono jack (1)

General

Power requirement	AC 120V, 60Hz
AC outlet	Total 400 W max. (unswitched)
Power consumption	25 W
Operating temperature	5°C to 40°C (41°F to 104°F)
Storage temperature	−20°C to +60°C (−4°F to +140°F)
Dimensions	Approx. 355 × 116 × 387 mm (w/h/d) (14 × 4 5/8 × 15 1/4 inches)
Weight	Approx. 6.5 kg (14 lb 5 oz)
Supplied accessory	Cleaning cassette (1)

Accessories not supplied

Remote Commander RM-S52 (wireless)
Remote control unit RM-S18 (wired)
Connecting cables
RFU adaptor RFU-89UCKA

Design and specifications are subject to change without notice.

SAFETY CHECK-OUT

After correcting the original service problem, perform the following safety checks before releasing the set to the customer:

1. Check the area of your repair for unsoldered or poorly-soldered connections. Check the entire board surface for solder splashes and bridges.
2. Check the interboard wiring to ensure that no wires are "pinched" or contact high-wattage resistors.
3. Look for unauthorized replacement parts, particularly transistors, that were installed during a previous repair. Point them out to the customer and recommend their replacement.
4. Look for parts which, though functioning, show obvious signs of deterioration. Point them out to the customer and recommend their replacement.
5. Check the line cord for cracks and abrasion. Recommend the replacement of any such line cord to the customer.
6. Check the B+ voltage to see it is at the values specified.
7. Check the antenna terminals, metal trim, "metallized" knobs, screws, and all other exposed metal parts for AC leakage. Check leakage as described below.

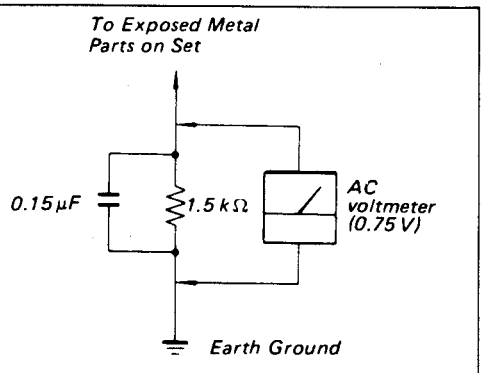

Fig. A. Using an AC voltmeter to check AC leakage.

LEAKAGE TEST

The AC leakage from any exposed metal part to earth ground and from all exposed metal parts to any exposed metal part having a return to chassis, must not exceed 0.5 mA (500 microampers). Leakage current can be measured by any one of three methods.

1. A commercial leakage tester, such as the Simpson 229 or RCA WT-540A. Follow the manufacturers' instructions to use these instruments.
2. A battery-operated AC milliammeter. The Data Precision 245 digital multimeter is suitable for this job.
3. Measuring the voltage drop across a resistor by means of a VOM or battery-operated AC voltmeter. The "limit" indication is 0.75 V, so analog meters must have an accurate low-voltage scale. The Simpson 250 and Sanwa SH-63Trd are examples of a passive VOM that is suitable. Nearly all battery operated digital multimeters that have a 2 V AC range are suitable. (See Fig. A)

SAFETY-RELATED COMPONENT WARNING!!

COMPONENTS IDENTIFIED BY MARK ⚠ OR DOTTED LINE WITH MARK ⚠ ON THE SCHEMATIC DIAGRAMS AND IN THE PARTS LIST ARE CRITICAL TO SAFE OPERATION. REPLACE THESE COMPONENTS WITH SONY PARTS WHOSE PART NUMBERS APPEAR AS SHOWN IN THIS MANUAL OR IN SUPPLEMENTS PUBLISHED BY SONY.

ATTENTION AU COMPOSANT AYANT RAPPORT À LA SÉCURITÉ!

LES COMPOSANTS IDENTIFIÉS PAR UNE MARQUE ⚠ SUR LES DIAGRAMMES SCHÉMATIQUES ET LA LISTE DES PIÈCES SONT CRITIQUES POUR LA SÉCURITÉ DE FONCTIONNEMENT. NE REMPLACER CES COMPOSANTS QUE PAR DES PIÈCES SONY DONT LES NUMÉROS SONT DONNÉS DANS CE MANUEL OU DANS LES SUPPLÉMENTS PUBLIÉS PAR SONY.

TABLE OF CONTENTS

Section	Title	Page
1.	GENERAL	
	Location and Function of Parts and Controls	6
	Playing Back a Tape	8
	Remote Control Operation	9
	Tape Duplication System	9
	Hi8 (High Eight) Video System	10
2.	DISASSEMBLY	
2-1.	Removal of Cabinet	11
2-2.	Removal of Front Panel	11
2-3.	Removal of FB-169, HE-2 and MJ-25 Boards	11
2-4.	Opening of IF-20 Board	11
2-5.	Removal of Mechanism Block	12
2-6.	Removal of Power Supply Block	12
2-7.	Removal of Cassette Compartment Window Assembly	12
2-8.	Opening of MB-19 and MD-23 Boards	13
2-9.	Opening of HK-4 Board	13
2-10.	Opening of SE-10 Board	13
2-11.	Removal of Reel Motor	13
2-12.	Removal of RS-31 Board	14
2-13.	Removal Cassette Compartment	14
2-14.	Removal of Multi-cover and Roller Axle	14
2-15.	Internal View	15
3.	DIAGRAM	
3-1.	Circuit Boards Location	17
3-2.	Overall Block Diagram	19
3-3.	REC/PB Head Amp Block Diagram	23
3-4.	Y Process Block Diagram	25
3-5.	Chroma Process Block Diagram	27
3-6.	Video IN/OUT Block Diagram	31
3-7.	Servo Block Diagram	35
3-8.	System Control Block Diagram	38
3-9.	System Control — Video Block Interface	41
3-10.	System Control — Servo (Capstan Motor) Block Interface	41
3-11.	System Control — Servo (Drum Motor) Block Interface	41
3-12.	SYSTEM Control — Servo (Reel Motor) Block Interface	43
3-13.	System Control — Servo (ATF Servo) Block Interface	43
3-14.	System Control — Servo (STILL) Block Interface	45
3-15.	System Control — Servo (Head Selecting) Block Interface	45
3-16.	System Control — Servo (Others) Block Interface	45
3-17.	System Control — MD Block Interface	47
3-18.	Mode Control Microcomputer — Peripheral Circuit Interface (IC001 (CXP80116) on SE-10 board)	49
3-19.	System Control — PCM Audio Block Interface	51
3-20.	Servo — Video Block Interface	51
3-21.	PCM Audio — Video Block Interface	51
3-22.	PCM Audio — Servo Interface	52
3-23.	PCM Audio — Audio Block Interface	52
3-24.	Function Control Block Diagram	55
3-25.	Timer Microcomputer (IC001 (CXP5046) on FB-169 Board) Interface	56
3-26.	AFM/PCM Block Diagram	59
3-27.	Audio IN/OUT Block Diagram	62
3-28.	Power Block Diagram	65
4.	PRINTED WIRING BOARDS AND SCHEMATIC DIAGRAMS	
4-1.	Frame Schematic Diagram	68
4-2.	Printed Wiring Boards and Schematic Diagrams	75
	• FR-40, RP-73 (SP), RP-73 (LP) Boards	76
	• HK-4 (C Video Process) Board	85
	• HK-4 (Y Video Process) Board	93
	• HK-4 (Y/C/AFM Mix) Board	102
	• SE-10 (Servo, System Control) Board	111
	• SE-10 (ATF Servo, Head Select), IG-4 Boards	119
	• MD-23, TS-74 (R), TS-74 (L) Boards	126
	• RS-31, LD-1, MS-4, LS-9 Boards	132
	• MB-19 Board	138
	• PD-19, PA-27 Boards	144
	• IF-20 (Sharpness, Noise Cancel) Board	151
	• IF-20 (Comb Filter) Board	160
	• IF-20 (Video Y/C Out), JB-5, JB-4, TR-40, Boards	169
	• IF-20 (Audio In/Out) Board	178
	• FB-169, TC-20, MJ-25, HE-2 Boards	186
	• Power Block Board	192
4-3.	Semiconductors	197
5.	EXPLODED VIEWS	
5-1.	Front Panel and Cabinet Assemblies	199
5-2.	PC Boards and Power Supply Assemblies	200
5-3.	Mechanical Deck Boards Assembly	201
5-4.	Cassette Compartment Assembly (1)	202
5-5.	Cassette Compartment Assembly (2)	203
5-6.	Threading Ring and Tape Path Assemblies	204
5-7.	Reel Chassis Assembly	205
5-8.	Head Drum and Threading Ring Assemblies	206
5-9.	Mechanism Control Chassis Assembly	207
6.	ELECTRICAL PARTS LIST	208
	Hardware List	264
7.	MECHANICAL ADJUSTMENT	
7-1.	Periodic Check and Maintenace	265
7-1-1.	Maintenance After Repairs	265
7-1-2.	Periodic Check	266
7-1-3.	Servicing Tools	267
7-1-4.	How to Use the Cleaning Tape	269
7-1-5.	Others	269
7-2.	Replacement of Major Parts	270
7-2-1.	Replacement of the Fly Wheel	272
7-2-2.	Replacement of the Rotary Upper Drum	273
7-2-3.	Replacement of the Drum Assembly	275
7-2-4.	Replacement of the Threading Ring Assembly	277

Section	Title	Page
7-2-5.	Replacement of the Pinch Roller Arm Assembly	279
7-2-6.	Replacement of the Capstan Motor	281
7-2-7.	Replacement of the Threading Motor Assembly	282
7-2-8.	Replacement of the Reel Motor	283
7-2-9.	Replacement of the No. 3 and No. 4 Guides	284
7-2-10.	Replacement of the Entrance Guide (P) Assembly (No. 2 Guide Assembly)	285
7-2-11.	Replacement of the Slant Guide Assembly	286
7-2-12.	Replacement of the No. 5 Guide Block Complete Assembly	287
7-2-13.	Replacement of the S Reel Table Assembly	288
7-2-14.	Replacement of the T Reel Table Assembly	289
7-2-15.	Replacement of the Pinch Press Arm Assembly	290
7-2-16.	Replacement of the Tension Regulator Arm Assembly	290
7-2-17.	Replacement of the Tension Regulator Band Assembly	292
7-2-18.	Replacement of the L Slider Assembly	293
7-2-19.	Replacement of the L-Switch ASSEMBLY	295
7-2-20.	Replacement of the Plunger Solenoid	297
7-2-21.	Replacement of the M-Switch Assembly	298
7-2-22.	Replacement of the M Slider	300
7-2-23.	Installation of the Block Plate Assembly	302
7-2-24.	Parallelism Adjustment of the Cassette Holder Block	303
7-3.	Torque and Back Tension Adjustment	304
7-3-1.	Check of the Main Brake Torque	304
7-3-2.	Check of the Soft Brake Torque	306
7-3-3.	Check of the Rew Brake Torque	308
7-3-4.	Check by the FWD, RVS Take-up Torque Cassette	308
7-3-5.	FWD Back Tension Adjustment	309
7-4.	Tape Path Adjustment	311
7-4-1.	Connection of the Track Shift Tool	311
7-4-2.	Preparation for Adjustment	313
7-4-3.	Tape Path System Adjustment Table	315
7-4-4.	Tape Entrance Side Adjustment	317
7-4-5.	Tape Exit Side Adjustment	320
7-4-6.	Check After Adjustment	323

8. ELECTRICAL ADJUSTMENT

8-1.	Power Supply Alignment	328
8-1-1.	Equipment Required	328
8-1-2.	+5V Adjustment	328
8-1-3.	REG +5V Adjustment	328
8-1-4.	REG +9V Adjustment	328
8-2.	Servo System Alignment	329
8-2-1.	Equipment Required	329
8-2-2.	DS Clock Check	329
8-2-3.	Capstan FG Duty Adjustment	330
8-2-4.	Reel FG Adjustment	330
8-2-5.	Drum Free Speed Adjustment	330
8-2-6.	Capstan Free Speed Adjustment	331
8-2-7.	Switching Position Adjustment	331
8-2-8.	ATF BPF Balance Adjustment	332
8-2-9.	STILL Adjustment	332
8-2-10.	SP Slow Adjustment	333
8-2-11.	LP Slow Adjustment	333
8-2-12.	SP Slow fH Adjustment	334
8-2-13.	LP Slow fH Adjustment	334
8-2-14.	Slow Tracking Adjustment	335
8-3.	Video Signal System Alignment	336
8-3-1.	Equipment Required	336
8-3-2.	SP PB Frequency Response Adjustment	337
8-3-3.	LP PB Frequency Response Adjustment	337
8-3-4.	Flying Erase Confirmation	338
8-3-5.	SubCarrier Frequency Adjustment	338
8-3-6.	PB C Comb Filter Adjustment	338
8-3-7.	SYNC AGC Adjustment	339
8-3-8.	AGC Output Level Adjustment	339
8-3-9.	Video Output Level Adjustment	339
8-3-10.	STD Mode PB Y Level Adjustment	339
8-3-11.	PB De-emphasis Adjustment	340
8-3-12.	Hi8 Mode PB Y Level Adjustment	340
8-3-13.	STD Mode Y FM Carrier Adjustment	340
8-3-14.	STD Mode Y FM Deviation Adjustment	340
8-3-15.	Hi8 Mode Y FM Carrier Adjustment	341
8-3-16.	Hi8 Mode Y FM Deviation Adjustment	341
8-3-17.	378fH VCO Adjustment	342
8-3-18.	Chroma Emphasis fo Adjustment	342
8-3-19.	Carrier Balance Adjustment	343
8-3-20.	REC Y RF Level Adjustment	343
8-3-21.	REC C RF Level Adjustment	343
8-3-22.	SP REC Current Adjustment	344
8-3-23.	DOC Level Adjustment	345
8-3-24.	E-E Y Signal Level Adjustment	346
8-3-25.	E-E C Signal Level Adjustment	346
8-3-26.	JOG Direct Y Signal Level Adjustment	346
8-3-27.	JOG Direct C Signal Level Adjustment	346
8-3-28.	Chroma Cancel (1H) Adjustment	347
8-3-29.	Chroma Cancel (2H) Adjustment	347
8-3-30.	DC Offset Adjustment	347
8-3-31.	C Comb Cancel Adjustment	348
8-3-32.	Ys Level Adjustment	348
8-3-33.	Noise Cancel +6 dB Amplifier Adjustment	349
8-3-34.	Limiter Cancel Adjustment	349
8-3-35.	Y Output Level Adjustment	349
8-3-36.	CNR Chroma Output Level Adjustment	350
8-3-37.	Yx Filter DIP Point Adjustment	350
8-3-38.	Yx Filter C Control Level Adjustment	351
8-3-39.	Video Output Level Adjustment	351
8-3-40.	REF V Adjustment	352
8-3-41.	Picture Splitting Adjustment	352
8-4.	Audio Signal System Alignment	353
8-4-1.	Equipment Required	353
8-4-2.	PCM Master Clock Adjustment	353
8-4-3.	PCM Playback VCO Free-Frequency Adjustment	353
8-4-4.	D/A Converter Level Adjustment	354
8-4-5.	NR Decode Level Adjustment	354
8-4-6.	A/D Converter Offset Adjustment	354
8-4-7.	PCM REC Level Adjustment	354
8-5.	Adjustment Related Parts Arrangement Diagrams	356

SECTION 1
GENERAL

This section is extracted from instruction manual.

Location and Function of Parts and Controls

Refer to the pages indicated in ( ) for details.

Front Panel

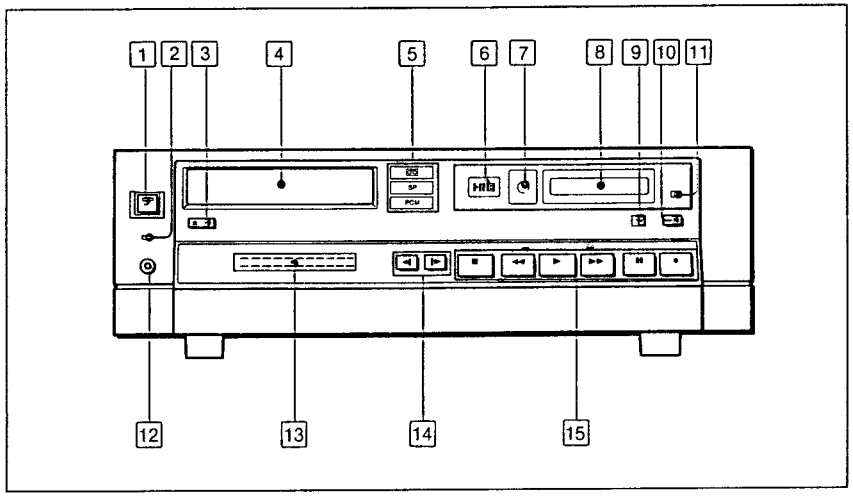

1 POWER ON/OFF switch and indicator
Press to turn on the power. The indicator lights up when the power is on.

2 STANDBY indicator
Lights up when the power cord is connected to a wall outlet, and goes out when the power of the VCR is on.

3 ⏏ EJECT button
Press to remove the cassette.

4 Cassette compartment

5 Indicators

[cassette]	Lights up when a cassette is in the cassette compartment.
SP	Lights up when the power is on, and goes out when the tape speed is in the LP (long play) mode or no signal is recorded on the tape.
PCM	Lights up when PCM sound is recorded on the tape or during PCM audio recording. (18) Also lights up when PCM sound is played back.

6 Hi8 indicator
Lights up when the power is on, and goes out when a tape recorded in the standard system is inserted or when the system used in recording cannot be determined.

7 Remote sensor (18)
Point the RM-S52 Remote Commander (not supplied) here.

8 Time counter display
Displays the item selected by the TC COUNTER selector.

9 TC (time code) COUNTER (reel counter) selector (18)

TC	Displays 8mm time code. " --:--:-- " will be displayed when no time code is recorded on the tape.
COUNTER	Displays the counter which increases as the tape advances. The display is reset to " 0000 " when you newly insert a cassette or when you unplug and plug in the power cord.

10 RESET (counter reset) button (18)
Press to reset the counter to " 0000 ".

11 TIMER REC indicator
Lights up when the TIMER switch is set to REC with the power cord connected to a wall outlet and shows that the recording/playback cannot be operated.
It goes out when you unplug the power cord from a wall outlet.

12 HEADPHONES jack (stereo minijack)

13 Audio level meters

Recording	Audio recording level of the sound which is selected with the AUDIO OUTPUT SELECT switch (inside the front panel) is shown. **When AUDIO OUTPUT SELECT is set to STD or MIX** The monaural sound being recorded is displayed on both channels even when one of the REC LEVEL controls (L or R) is set to " 0 ".
Playback	Audio playback level of the sound which is selected with the AUDIO OUTPUT SELECT switch is shown.

14 SLOW button
Press for a slow-motion playback.

◄▮	Rewinds the picture at 1/5 normal speed. (Enters the stop mode approx. 40 seconds after to prevent damage to the tape.)
▮►	Advances the picture at 1/5 normal speed.

15 Tape transport buttons and indicators
The indicator lights up during the corresponding operation.

■	STOP (no indicator)
◄◄	REW (rewind)
►	PLAY (playback)
►►	FF (fast-forward)
▮▮	PAUSE
●	REC (recording)

Inside the Front Panel

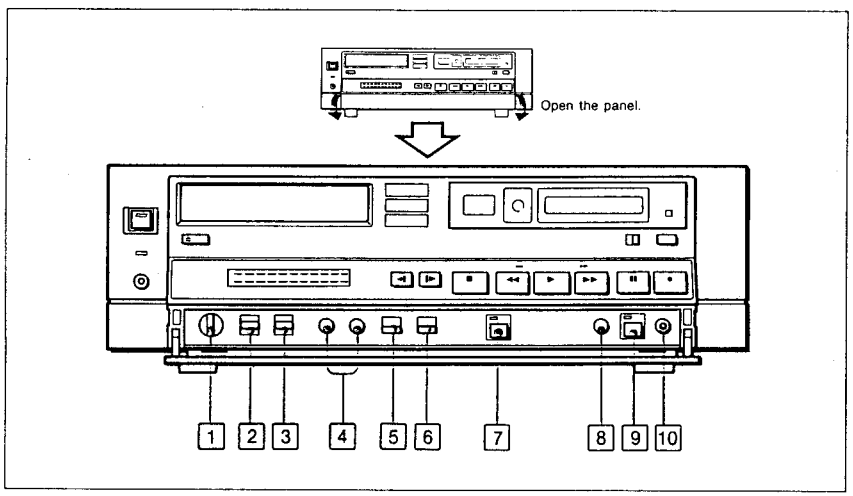

1 PHONE LEVEL (headphone level) control

2 AUDIO OUTPUT SELECT switch ⓲
Select the sound to be monitored through headphones or the speaker of a video monitor.
PCM: To hear the PCM sound only.
MIX : To hear the PCM and standard sound mixed.
STD : To hear the standard sound only. (monaural)

3 TIMER switch
Set to REC or PLAY to start/stop recording or playback at a specified time when an external timer is connected.
Normally set to OFF.

4 REC LEVEL controls

5 AUTO REPEAT switch
Set to ON to repeat playback automatically from the beginning of the tape to the end of a recording.
Normally set to OFF.

6 INPUT SELECT switch
Select the ordinary video input signal or the S video input signal.

7 8 mm TIME CODE WRITE button and indicator
Press to record the time code on the tape. The indicator blinks during preroll prior to time code recording. During time code recording, the indicator on the button lights.

8 SLOW ADJ (slow adjust) control
Turn to adjust the picture if streaks appear during the slow-motion playback.

9 AUDIO DUB (audio dubbing) button and indicator
Press to record additional music or narration.

10 MIC (microphone) jack (minijack)
Connect a microphone with a miniplug.

Rear Panel

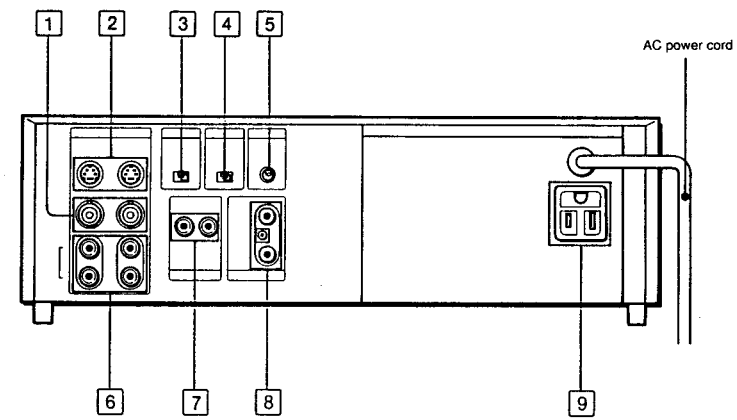

1 VIDEO IN/OUT (input/output) connectors (BNC type)

2 S VIDEO IN/OUT (input/output) connectors (4-pin mini-DIN)
Accept or supply S video signals. Use a commercially available S VIDEO connecting cable.

3 SYNC INT/EXT (sync signal internal/external) selector
Set to EXT to play back in synchronization with the external device. Normally set to INT.

4 EDIT switch

5 STILL ADJ (still adjust) control
Turn to adjust a still picture.

6 AUDIO IN/OUT (input/output) jacks (phono type, stereo)

7 CONTROL P IN/OUT (input/output) jacks (phono type) ⓮, ⓯
Connect the RM-S18 wired remote control unit (not supplied). Also using the CONTROL P connection, you can operate a number of EVO-9500A units simultaneously.

8 VIDEO/AUDIO OUT (output) jacks (phono type)
Supply the video and audio (monaural) output signals. To connect a TV without video and audio inputs, use the commercially available RFU-89UCKA RFU adaptor.

9 AC OUT connectors
These supply power to other equipment whose power consumption is 400W or less in total, regardless whether the POWER switch of this VCR is ON or OFF.
Do not connect to equipment whose power consumption is over 400W.

Using the Tape Counter

You can switch the 8mm time code display and the counter display using the TC COUNTER selector as follows:

Item to be displayed	TC COUNTER
8mm time code recorded on the tape	TC COUNTER
Counter for tape travel	TC COUNTER

To reset the counter display to "0000"

Press the RESET button.
It is useful to reset the counter at the beginning of the tape, and write down the content and the counter reading.

What is the "--:--:--:--" indication?

It will be displayed when you set the TC COUNTER selector to TC in the stop, fast-forward, or rewind mode, or while playing back a tape without the 8mm time code.

What is a Time Code ?

Each scene recorded on a tape can be numbered in units of frame (1/30 second) by the hour, minute, second and frame.
This is a time code.
The time code is automatically recorded on a tape during recording with this VCR, or it can be recorded separately by using the 8 mm TIME CODE WRITE button.
You can use the recorded time code to locate the playback starting or ending points.

Important
The time code used in this unit is the special 8 mm format time code for institutional products.
- This unit can read the time code recorded with the EVO-720, EVO-9100, EVO-9700, EVO-9800 and EVV-9000.
- This unit cannot read the RC time code (rewritable consumer time code). If you want to record the time code on your tape that this unit can read, use the TIME CODE WRITE button on this unit.
  In this case, however, the RC time code that was recorded on the tape will be erased.

To record the 8 mm time code
See page 24 and 25.

Monitoring the Picture of a Video Camera

Connect a video camera to the VIDEO (or S VIDEO) IN connector of the VCR and make the appropriate settings for the picture of the camera.
The picture is automatically switched to that of the camera when the VCR enters the rewind or stop mode.
This is useful together with the AUTO REPEAT function (page 20) when showing a "how to" tape in a public place, for example.

Playing Back an Audio Dubbed Tape

You can select the monitor sound recorded on the PCM track of the tape, such as narration or music, with the AUDIO OUTPUT SELECT switch.
For recording, see "Audio Dubbing" on page 32.

Audio recording pattern on a video tape

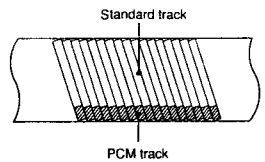

Playing back a stereo-recorded tape

Set the AUDIO OUTPUT SELECT switch to PCM.
You can monitor the stereo sound recorded on the PCM track of the tape.
When monitoring the monaural sound, set the switch to STD.

To select the monitor sound

Track to be played back	AUDIO OUTPUT SELECT
PCM only	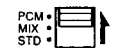
PCM and standard, mixed	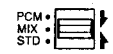
Standard only	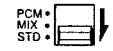

When a TV without video/audio inputs is connected
Connect your stereo system to this VCR to monitor the stereo sound.

If the sound is not heard or the PCM indicator blinks
When you set the AUDIO OUTPUT SELECT switch to PCM while playing back a tape recorded on a video camera recorder or a video cassette deck without the PCM function, the sound may not be heard or heard only intermittently, or the PCM indicator may blink. If this happens, set the AUDIO OUTPUT SELECT switch to STD.
The PCM indicator may still blink, but it does not affect the sound.

Others Remote Control Operation

Using the RM-S52 wireless Remote Commander (not supplied)

You can control the EVO-9500A from a distance.

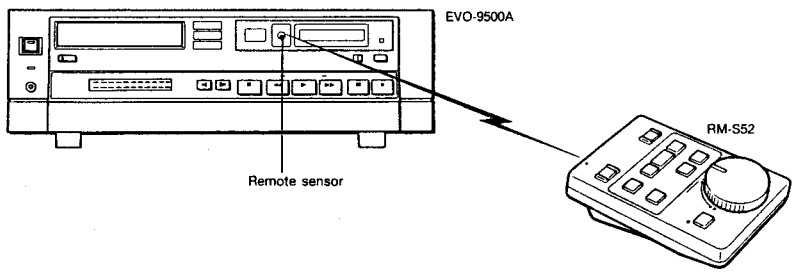

For details, refer to the instruction manual of the RM-S52.

Using the RM-S18 wired remote control unit (not supplied)

You can control up to 50 EVO-9500As at the same time.

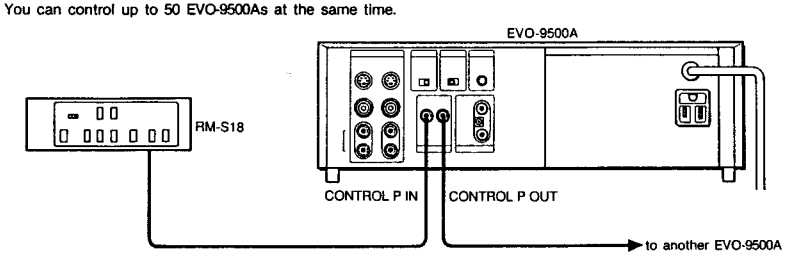

For details, refer to the instruction manual of the RM-S18.

Notes

When the RM-S18 is connected to the CONTROL P IN jack of the VCR, you can no longer control the VCR with the RM-S52.

Tape Duplication System

You can make a tape duplication system by connecting a number of EVO-9500As with the RM-S18 wired remote control unit (not supplied) as illustrated.
Using this system, you can produce a number of recorded tapes at a time.

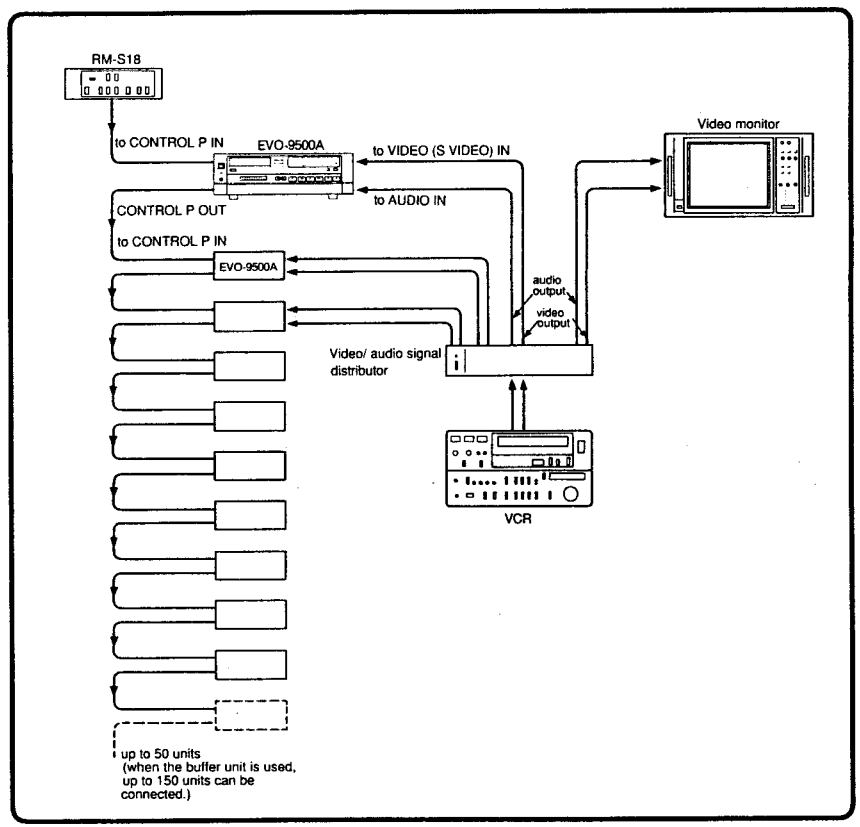

For detailed connection and operation, consult your Sony dealer.

Hi8 (High Eight) Video System

Features of the Hi8 Video System

The 8 mm video system employs a high-grade metal powder tape which allows the video cassette recorder to record a large amount of information and enhance picture quality. The Hi8 video system has been developed, taking advantage of the 8 mm video system. The main characteristics of the Hi8 are as follows:

Super High Quality Picture

The information capacity is a key element for picture improvement. It can be increased by shifting up to the FM carrier frequency range. In the Hi8 video system, the FM carrier frequency range of the luminance signal is shifted up to 5.7—7.7 MHz. This is higher than the 4.2—5.4 MHz range of the standard 8 mm video system. Thanks to this, the horizontal resolution is improved to more than 400 lines.

Use of High-Grade Tape Corresponding to the Hi8 Video System

Metal evaporated tape is ideal for video systems because it has large magnetic energy that allows for high-density recording. The Hi8 video cassette recorder uses such high-grade tape for the Hi8 video system, covering a wide frequency range, to achieve a high-quality video signal for recording/playback.

S VIDEO (Separated Luminance/ Chrominance Signal) Input/Output Connectors

Conventionally, video equipment uses the composite video signal containing the luminance (Y) signal and the chrominance (C) signal mixed. The composite video signal is liable to produce interference resulting in picture quality loss. On the contraty, the S VIDEO connector transmits or receives the video signal separated into the luminance signal and the chrominance signal. Flickers and color blur in the picture are minimized with the separated video signal, and sharpness is enhanced to such an extent that hair-fine stripes are clearly visible. The S VIDEO connector also assures an excellent editing quality with minimum picture quality loss.

Difference in Frequency Allocation

Standard video system

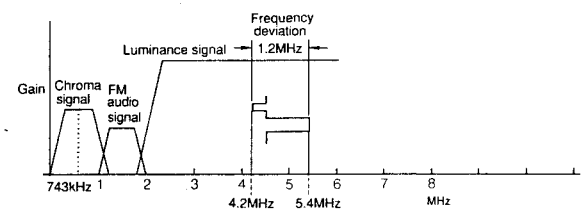

Hi8 video system

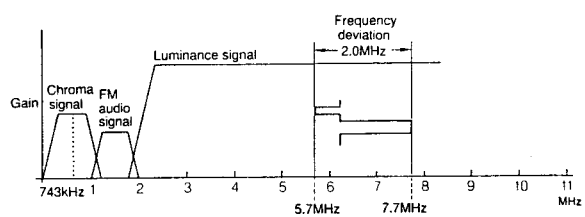

Hi8 Cassette Tape

The newly developed Hi8 ME and Hi8 MP cassette tapes with high durability feature characteristics best suiting Hi8 video system recording/playback. Hi8 cassettes have a detection hole on the bottom of the cassette shell to automatically set Hi8 VCRs in the Hi8 video system mode for recording.

Cassette	Detection hole A	Detection hole B
Hi8ME Hi8	open	closed
Hi8MP Hi8	closed	open
Standard MP 8	closed	closed

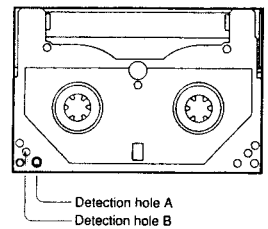

Automatic Switching of the System According to the Cassette Tape

The VCR switches the recording/playback system (Hi8 system or standard system) automatically according to the cassette tape being used.

Recording

When using a Hi8 cassette tape for recording, the VCR senses the detection holes on the cassette shell (see above), and automatically performs the recording in the SP (standard play) mode of the Hi8 video system. When using a standard 8mm tape, the recording is performed using the standard 8mm video system.

Ⓐ Recording in the Hi8 video system

Ⓑ Recording in the standard 8 mm video system

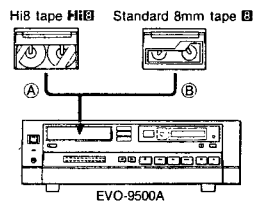

Playback

In playback, the VCR can detect the system mode used in recording by verifying the recorded signal, and plays back the tape in the appropriate mode.

Ⓐ Playback in the Hi8 video system

Ⓑ Playback in the standard 8 mm video system

Ⓒ Playback in the standard 8 mm video system

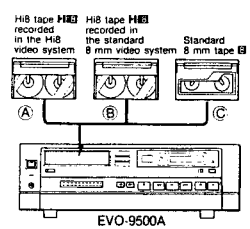

SECTION 2
DISASSEMBLY

2-1. REMOVAL OF CABINET

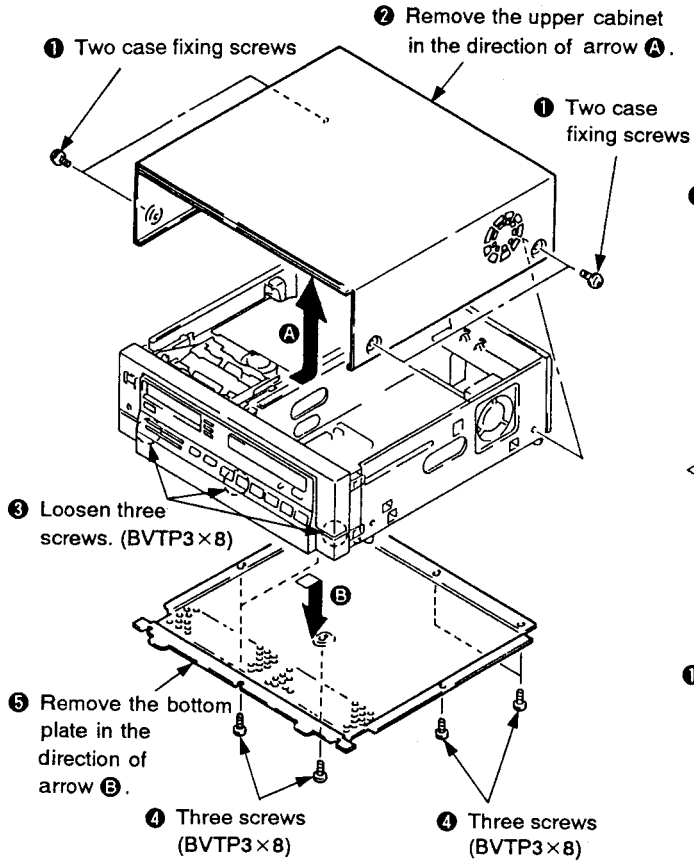

2-2. REMOVAL OF FRONT PANEL

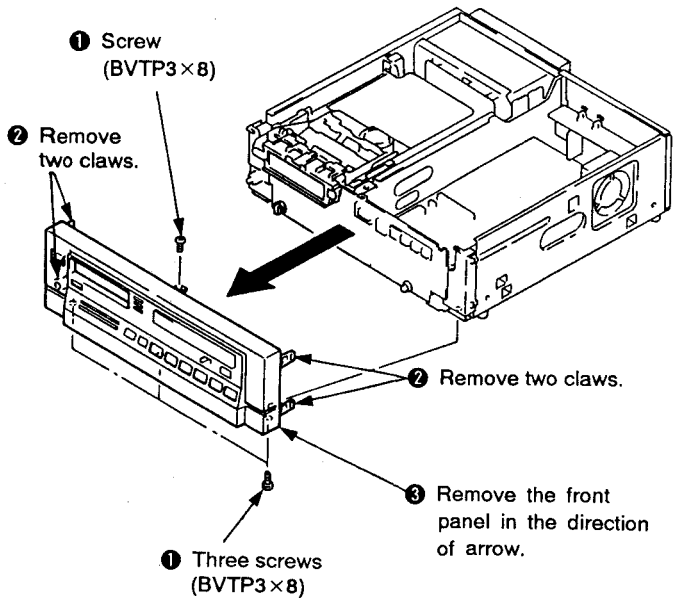

2-3. REMOVAL OF FB-169, HE-2 AND MJ-25 BOARDS

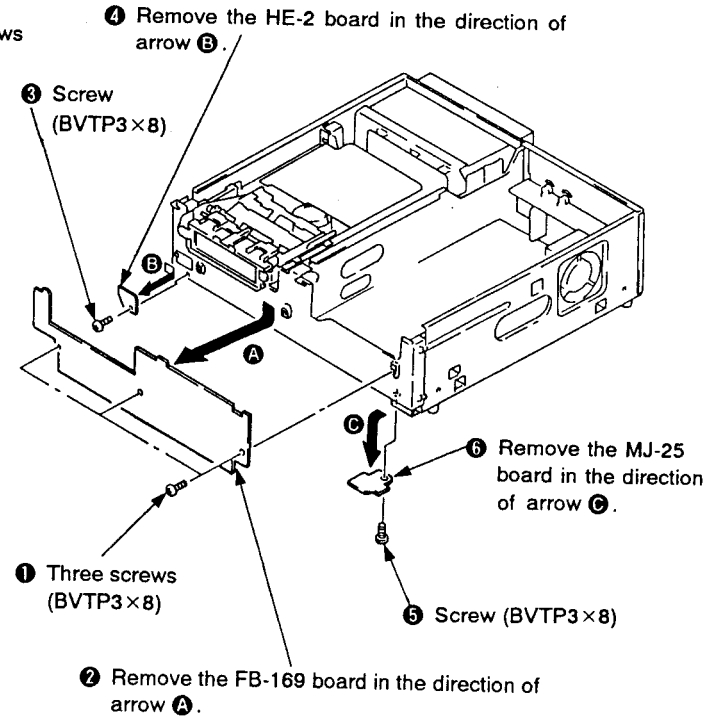

2-4. OPENING OF IF-20 BOARD

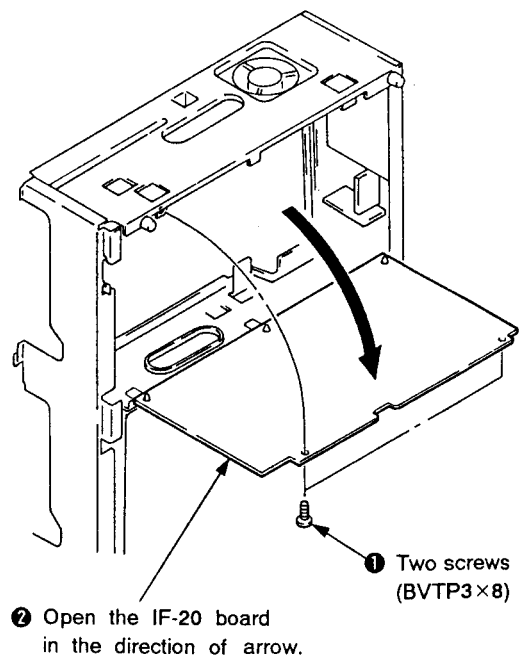

2-5. REMOVAL OF MECHANISM BLOCK

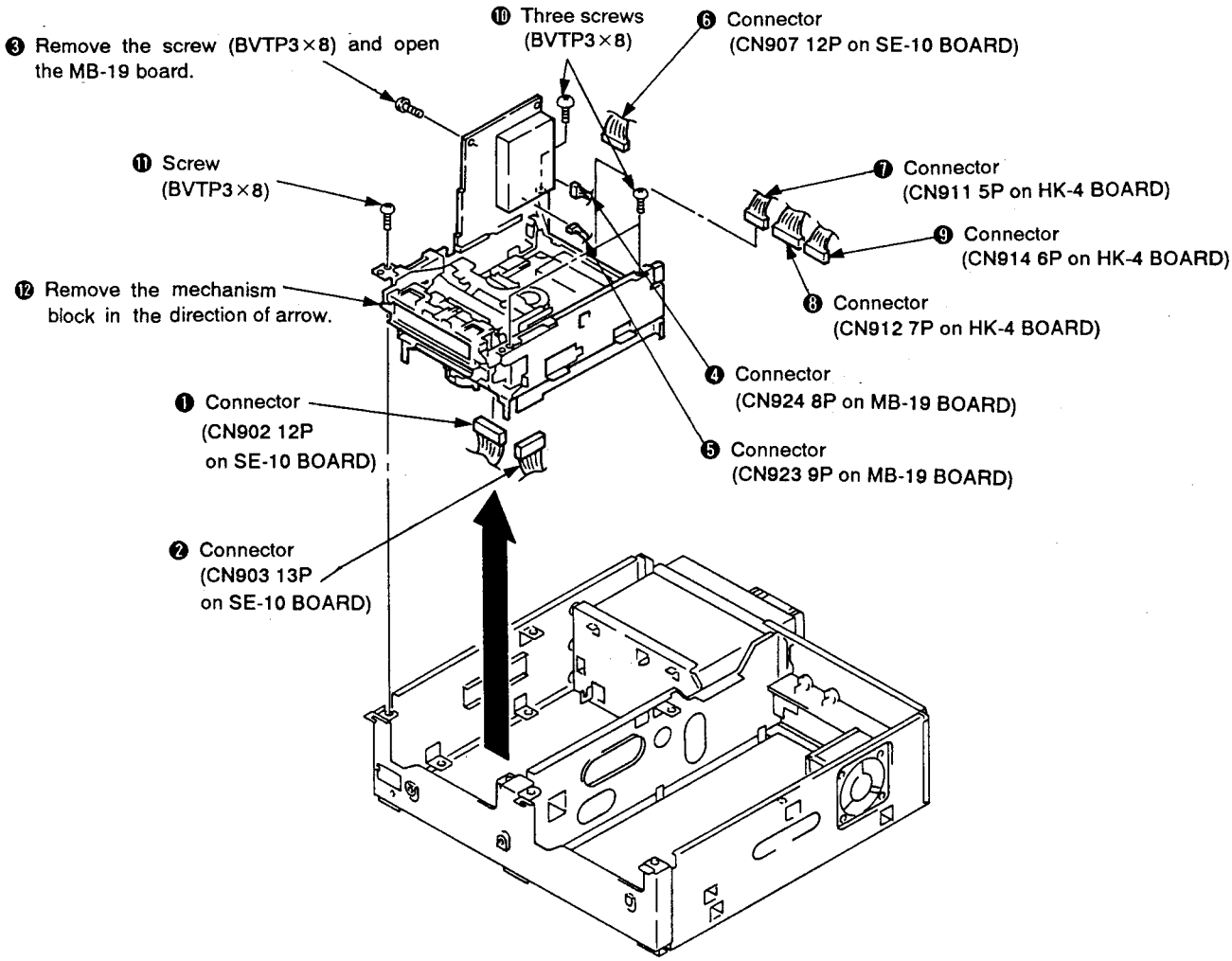

2-6. REMOVAL OF POWER SUPPLY BLOCK

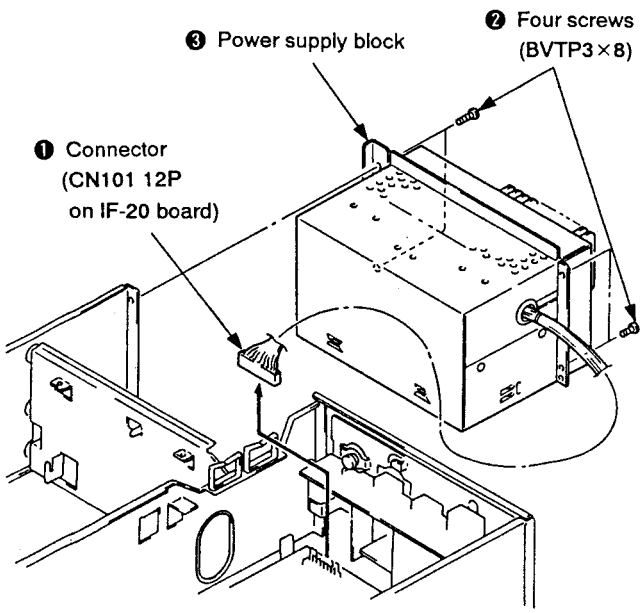

2-7. REMOVAL OF CASSETTE COMPARTMENT WINDOW ASSEMBLY

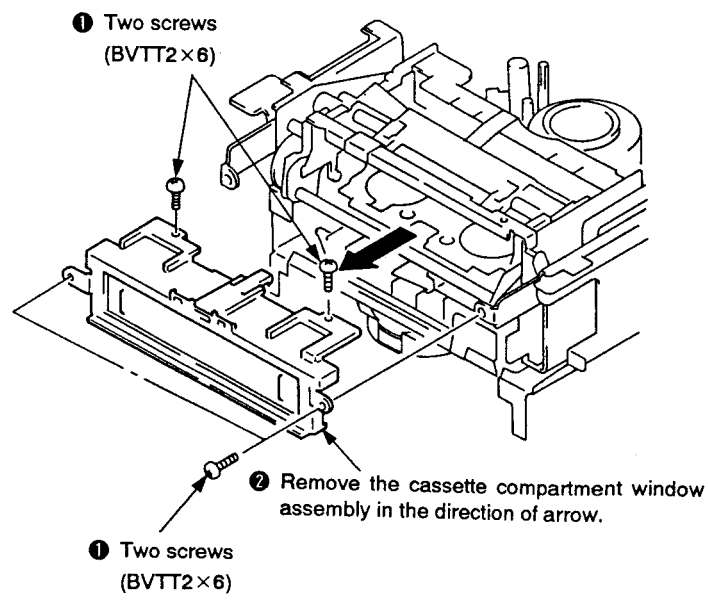

2-8. OPENING OF MB-19 AND MD-23 BOARDS

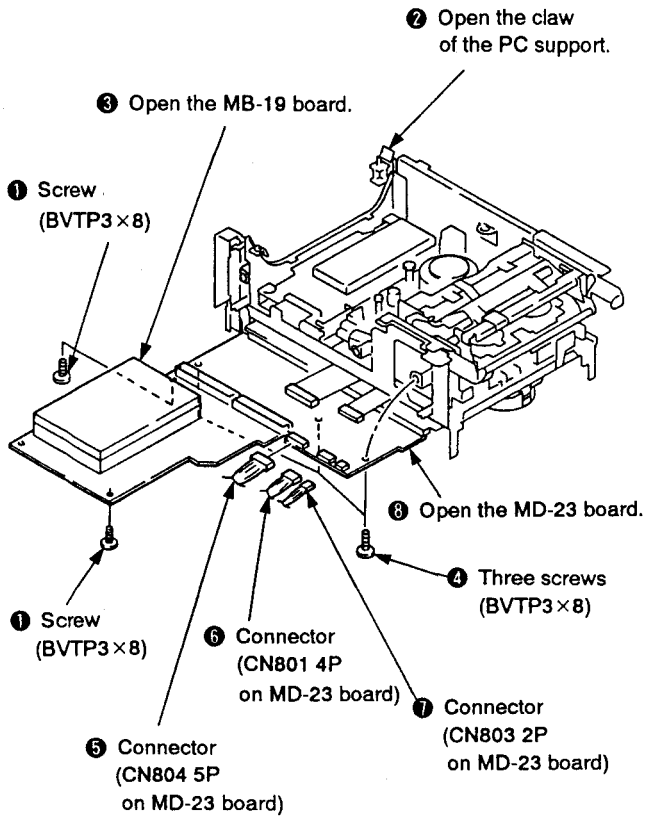

2-9. OPENING OF HK-4 BOARD

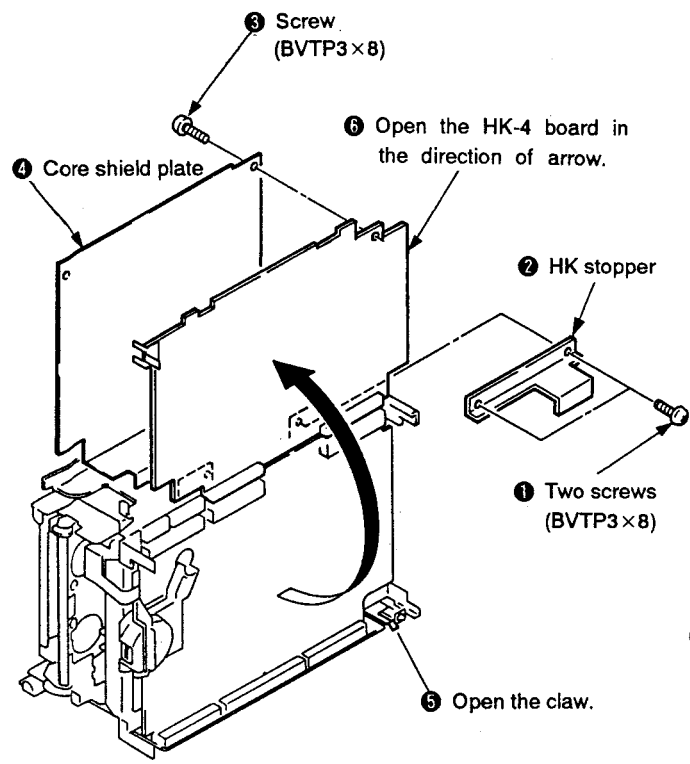

2-10. OPENING OF SE-10 BOARD

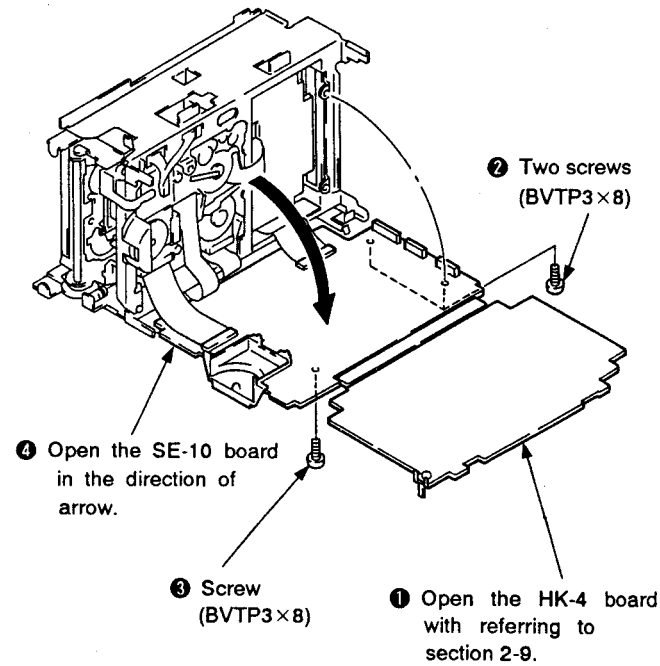

2-11. REMOVAL OF REEL MOTOR

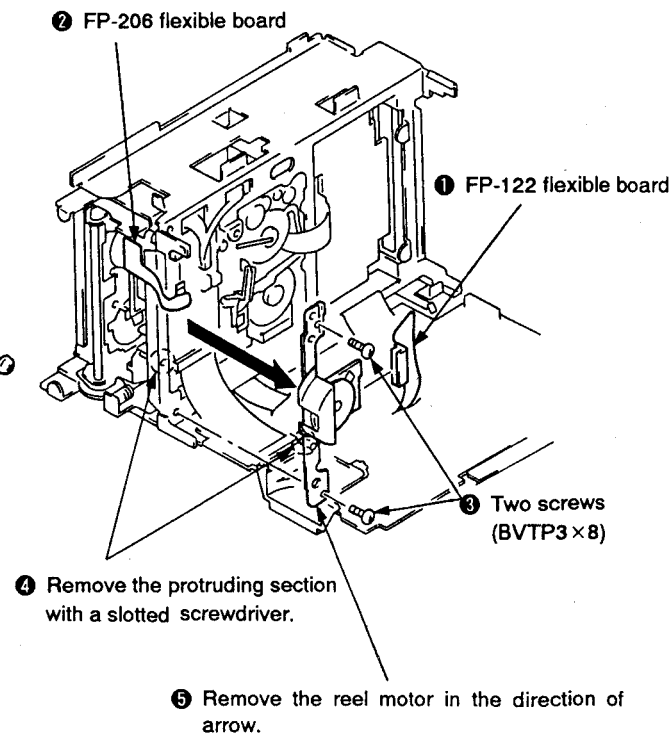

2-12. REMOVAL OF RS-31 BOARD

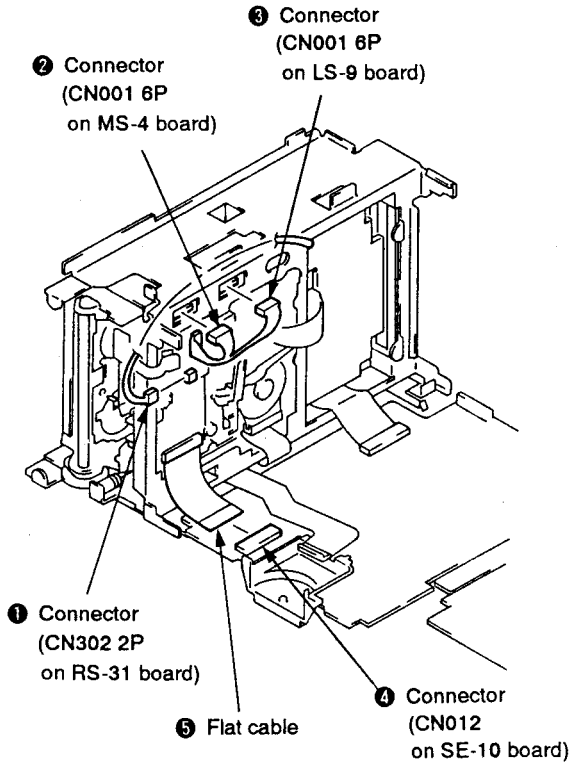

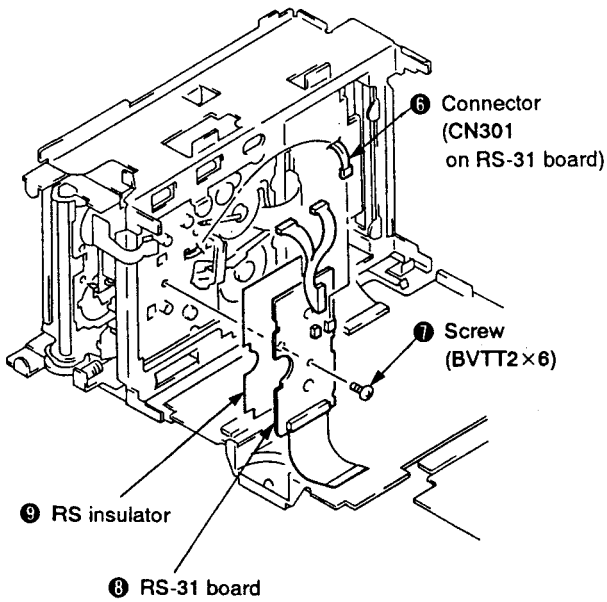

2-13. REMOVAL CASSETTE COMPARTMENT ASSEMBLY

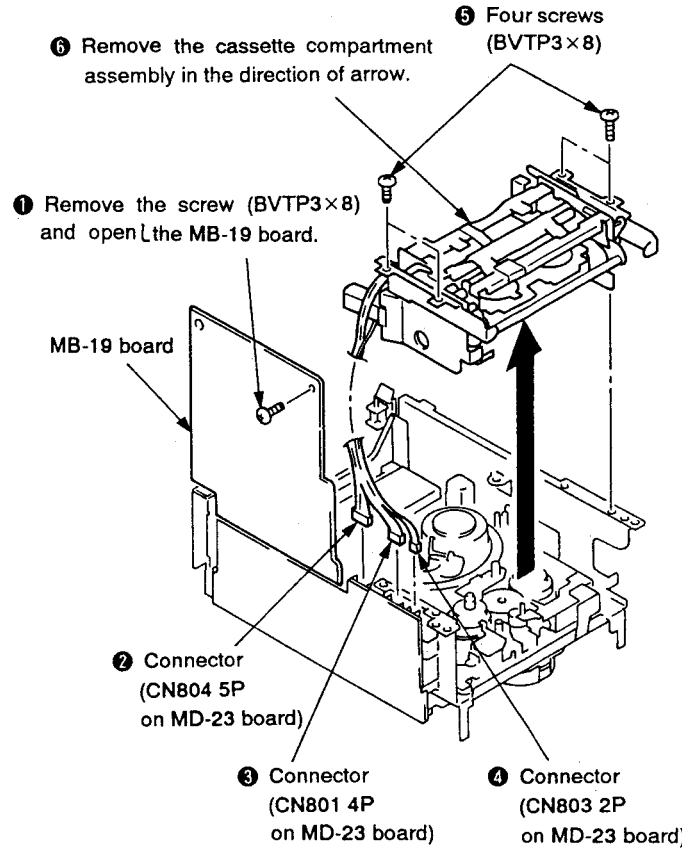

2-14. REMOVAL OF MULTI-COVER AND ROLLER SHAFT

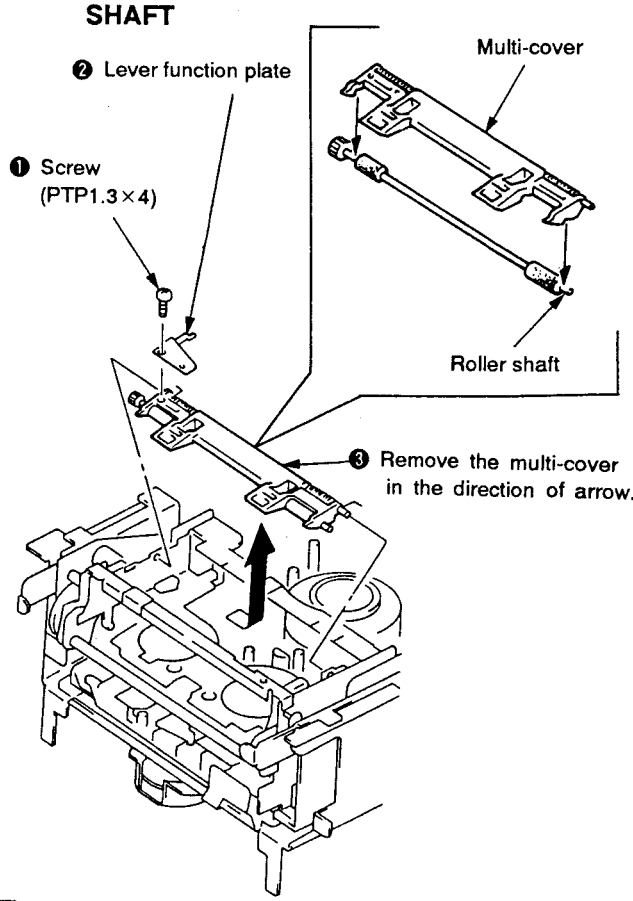

2-15. INTERNAL VIEW

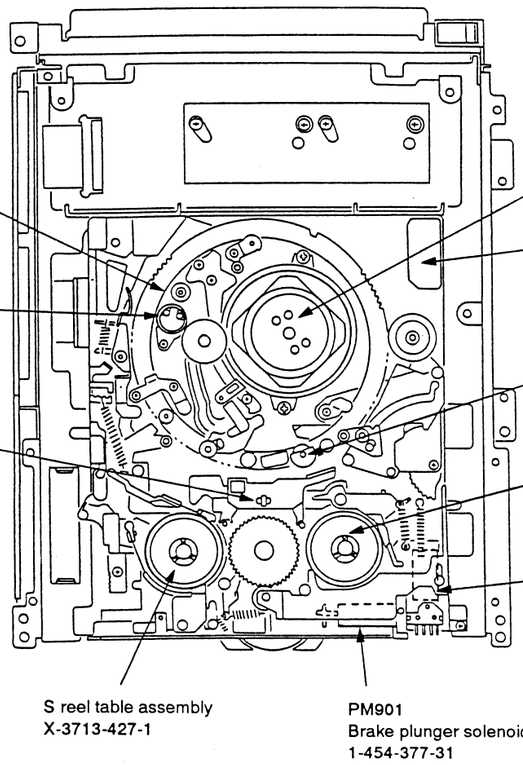

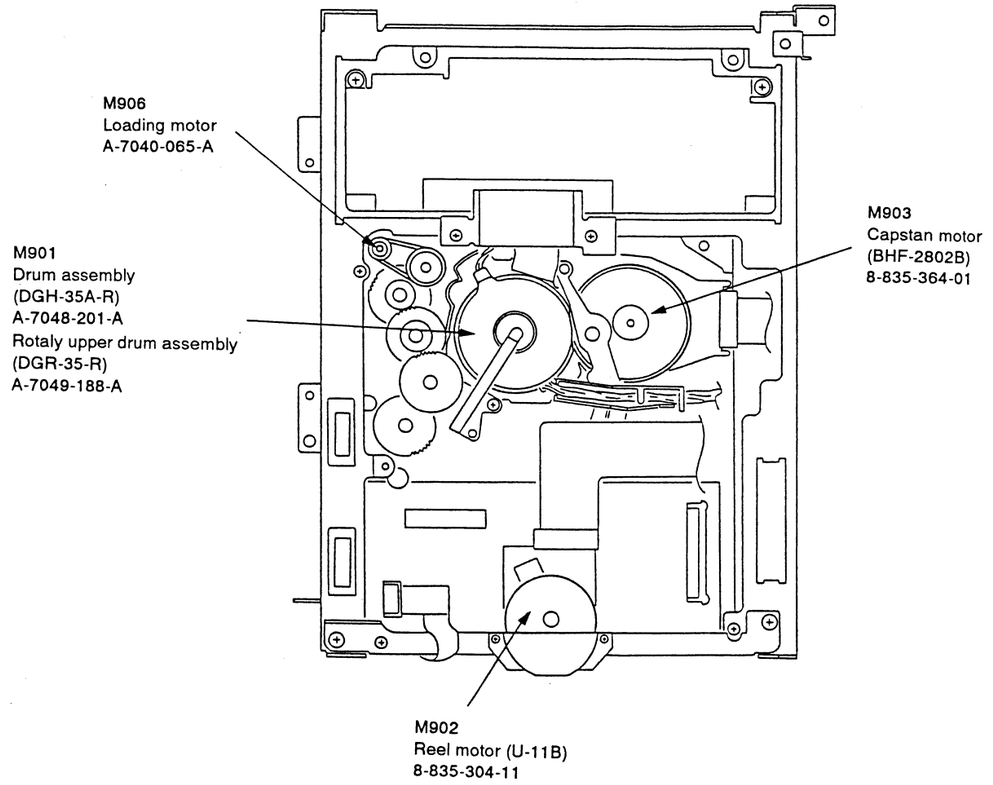

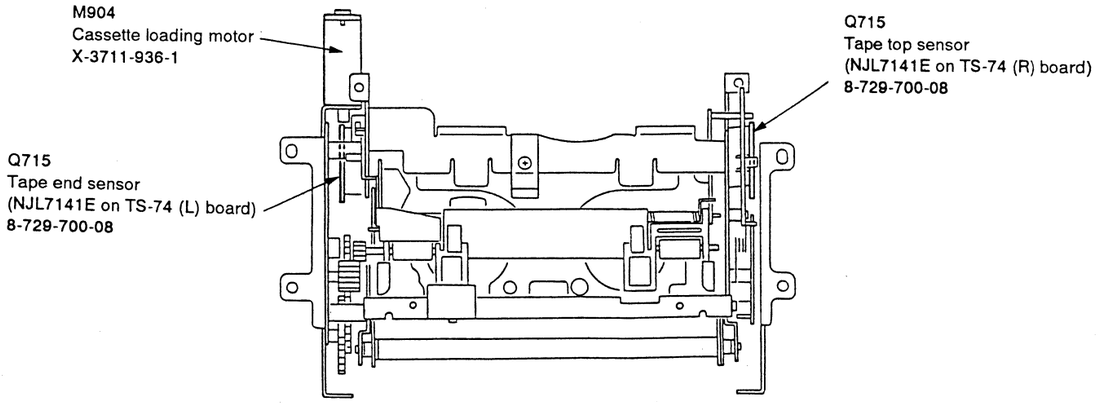

SECTION 3
DIAGRAM

3-1. CIRCUIT BOARDS LOCATION

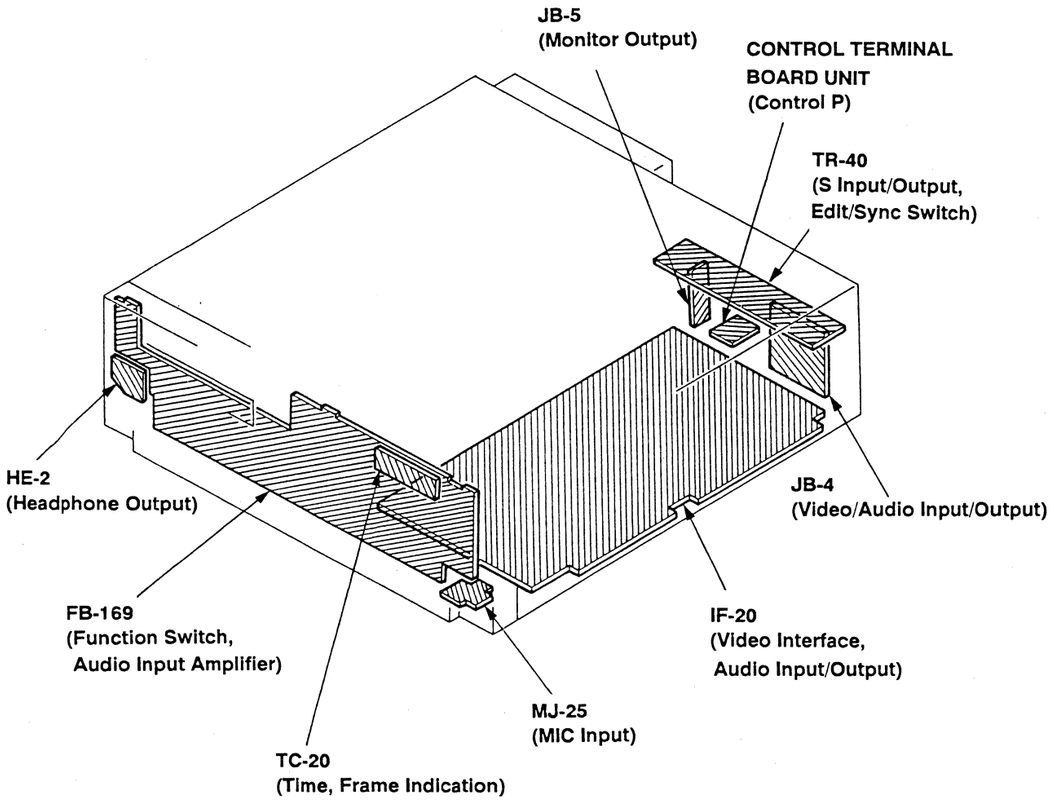

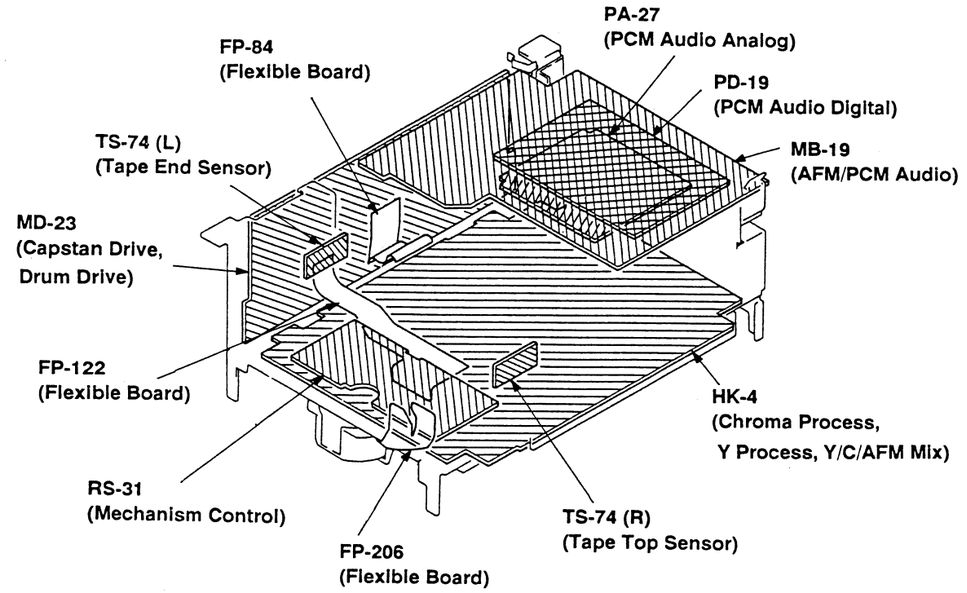

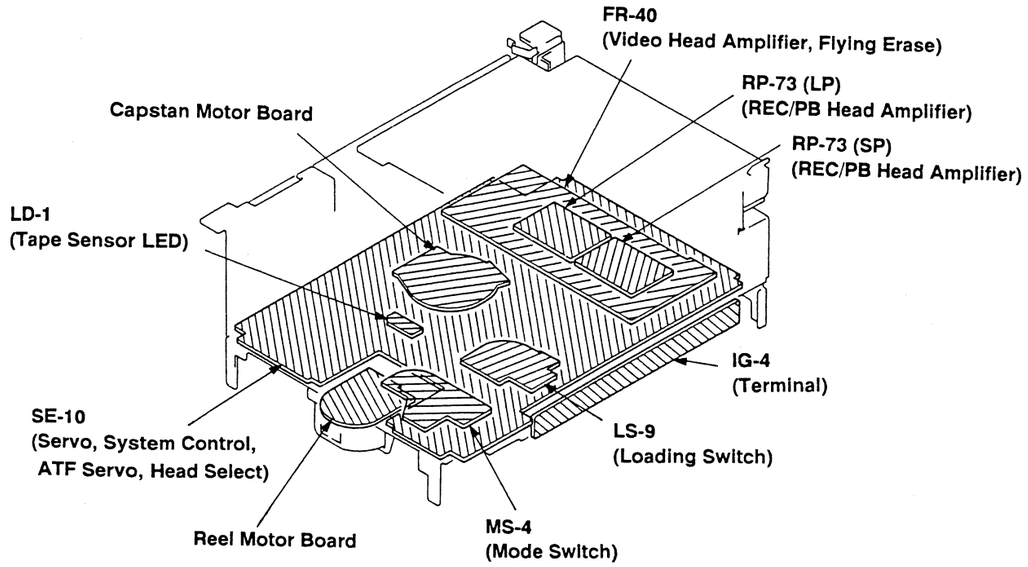

3-2. OVERALL BLOCK DIAGRAM

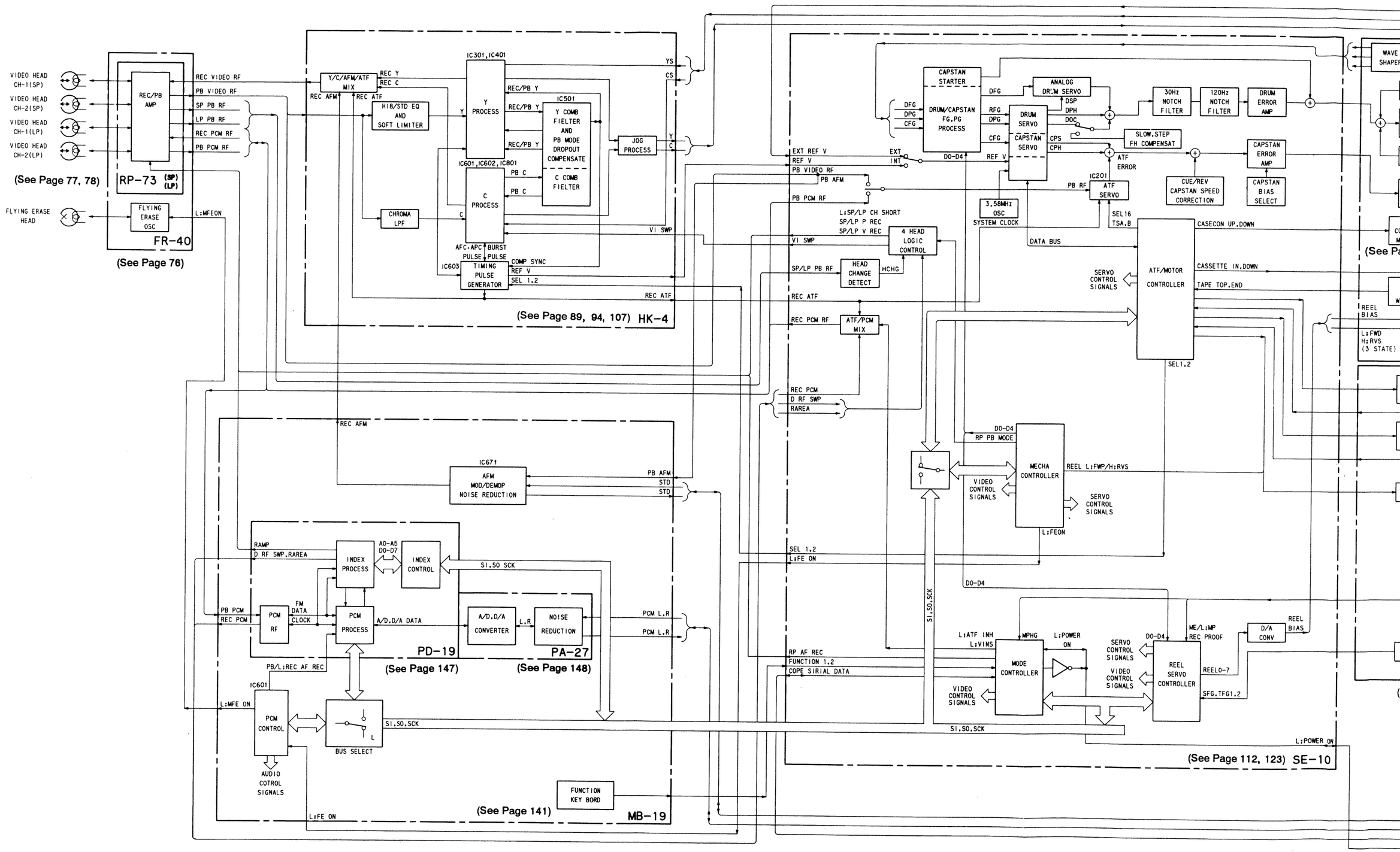

OVERALL
EVO-9500A

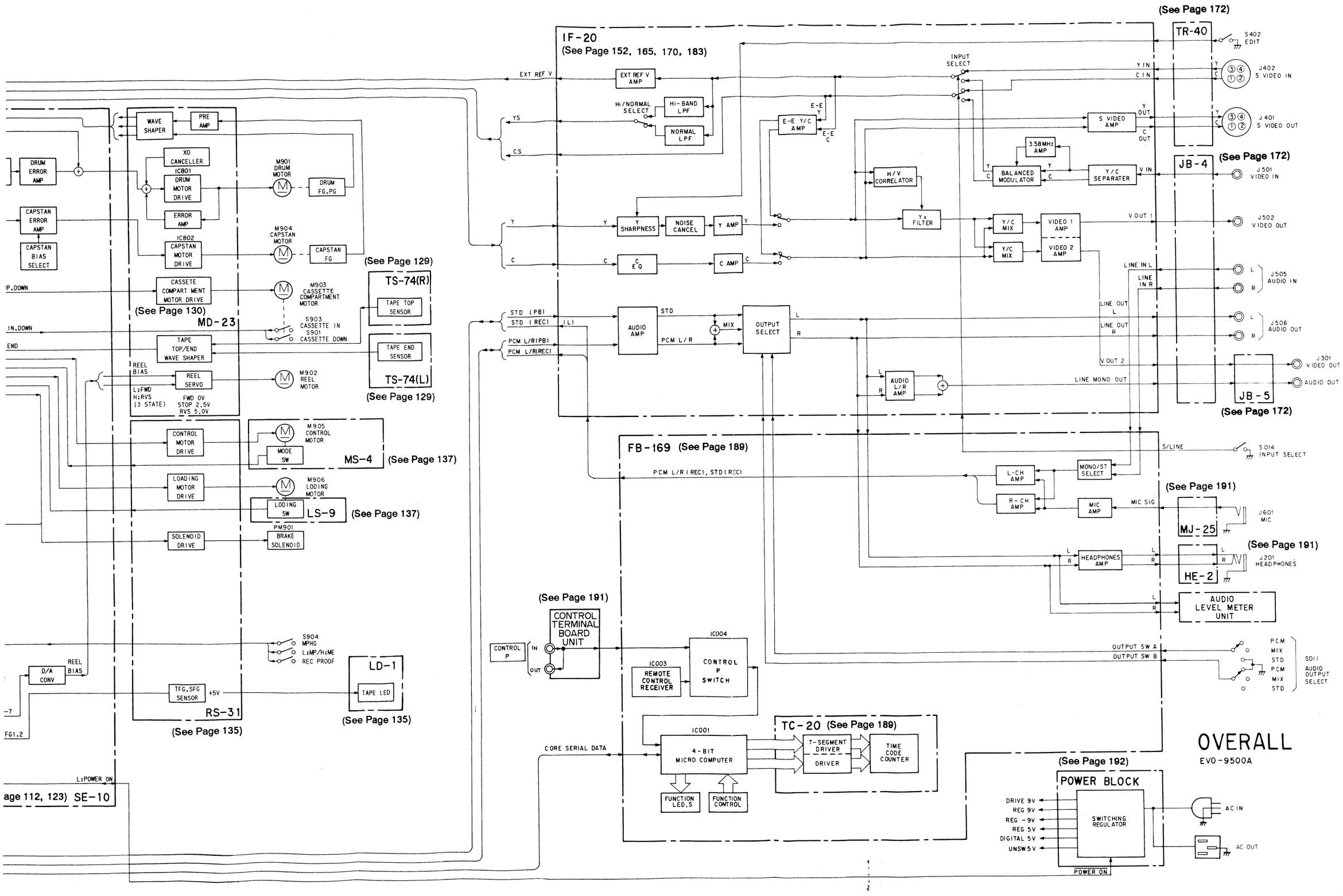

3. REC/PB HEAD AMP BLOCK DIAGRAM

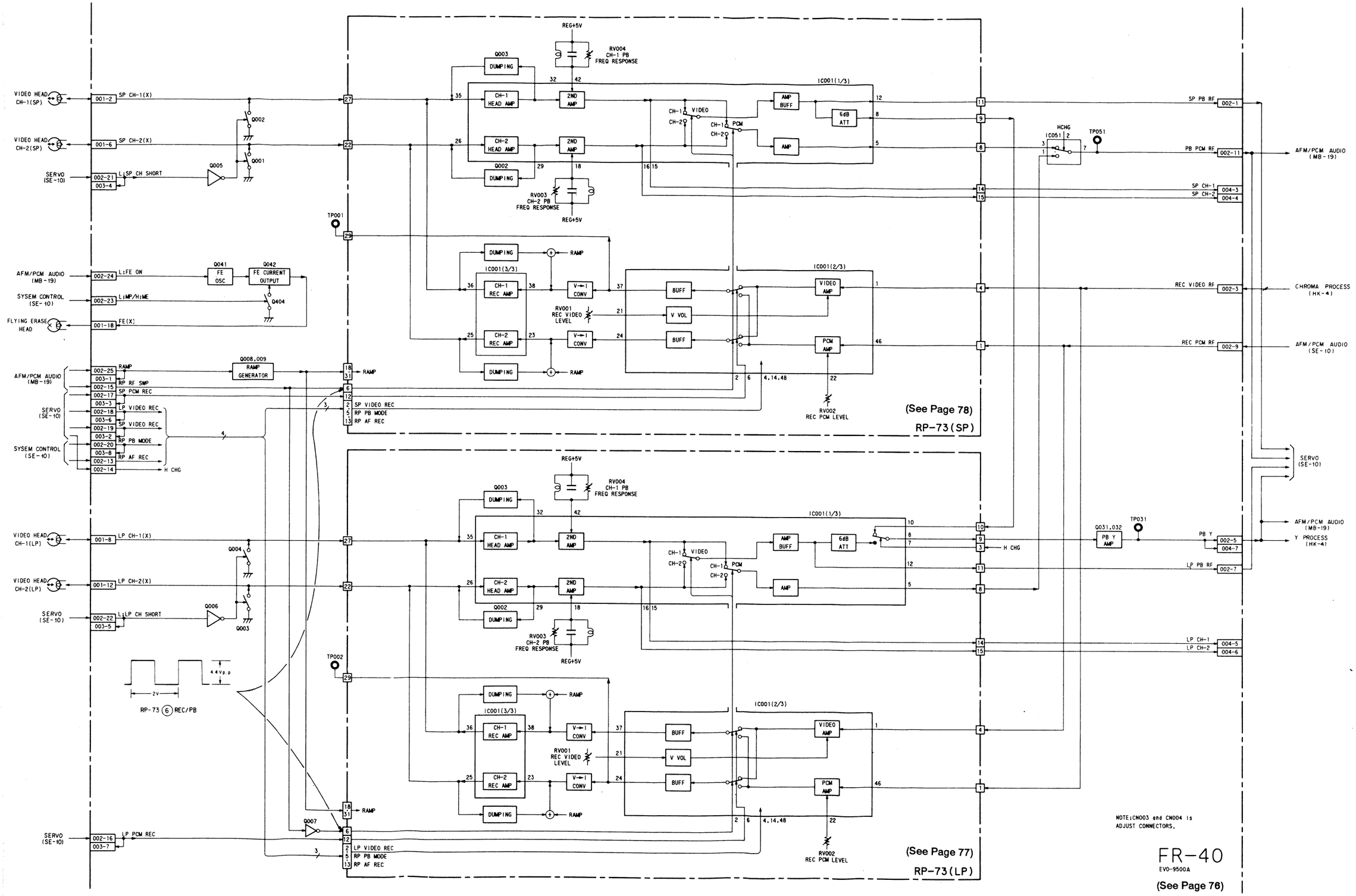

3-4. Y PROCESS B

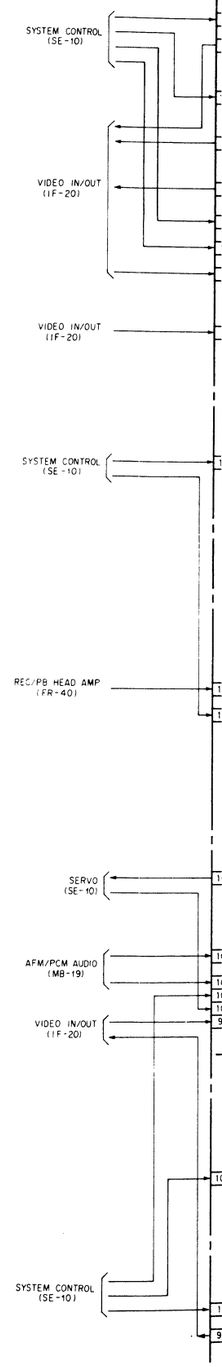

3-4. Y PROCESS BLOCK DIAGRAM

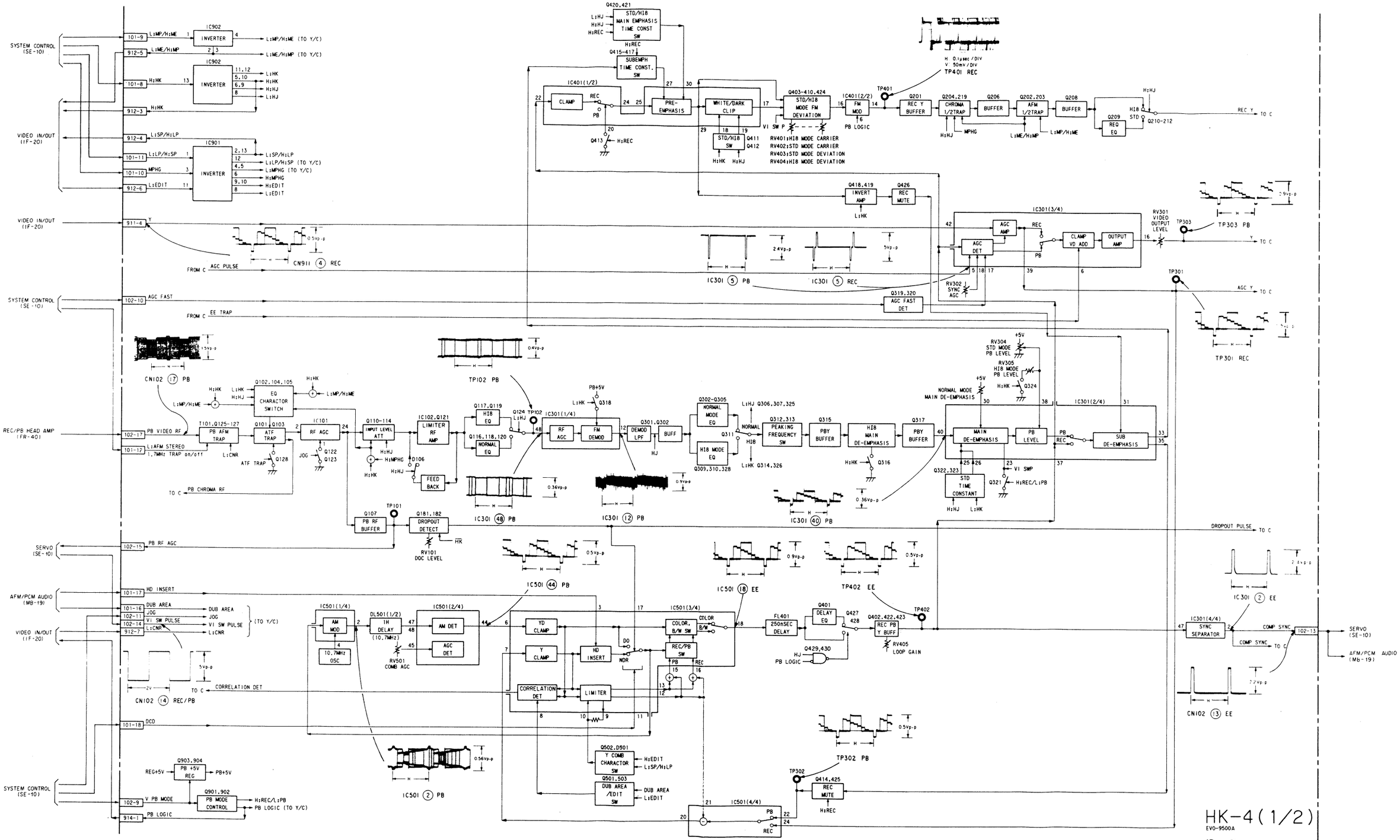

IOMA PROCESS BLOCK DIAGRAM

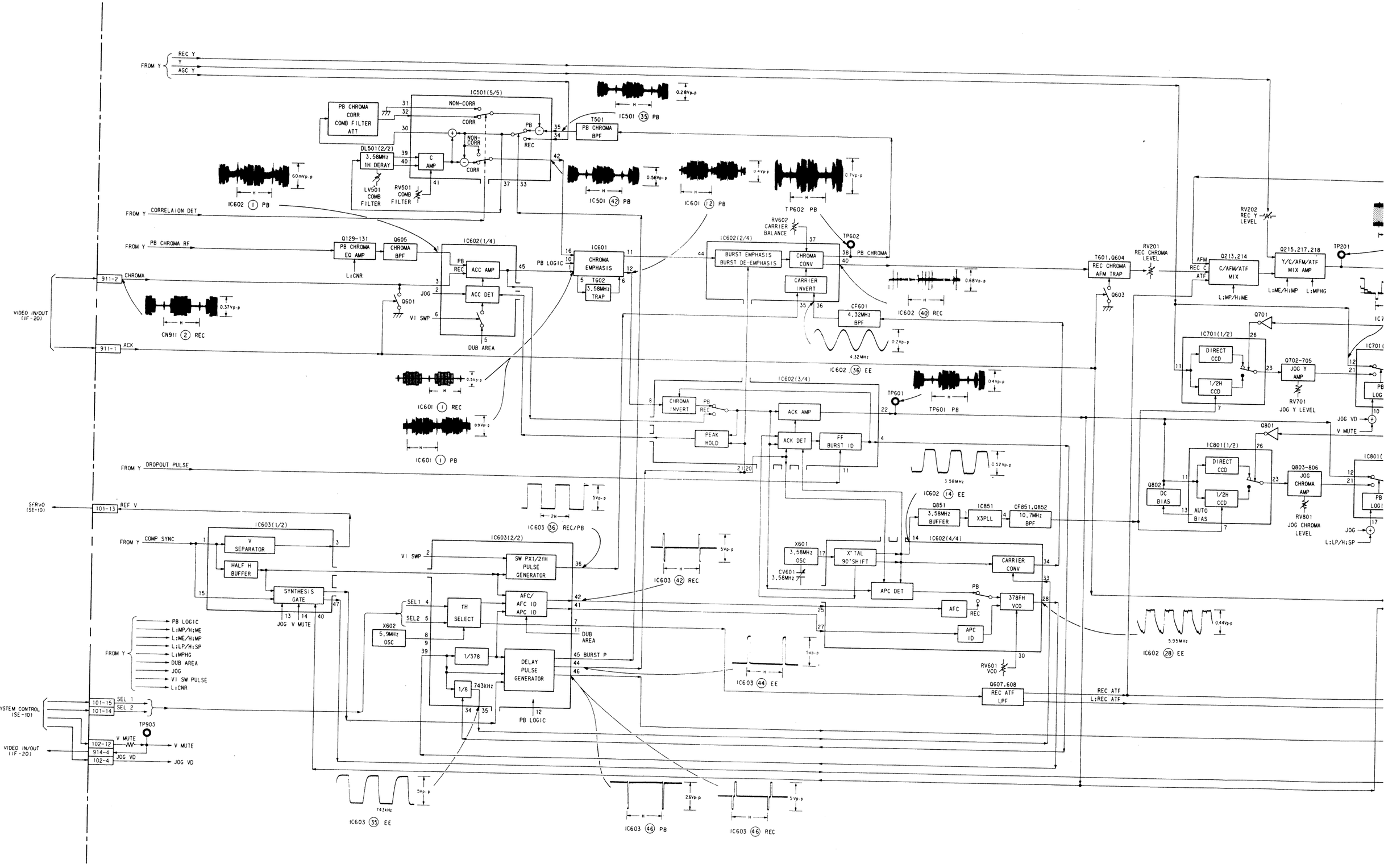

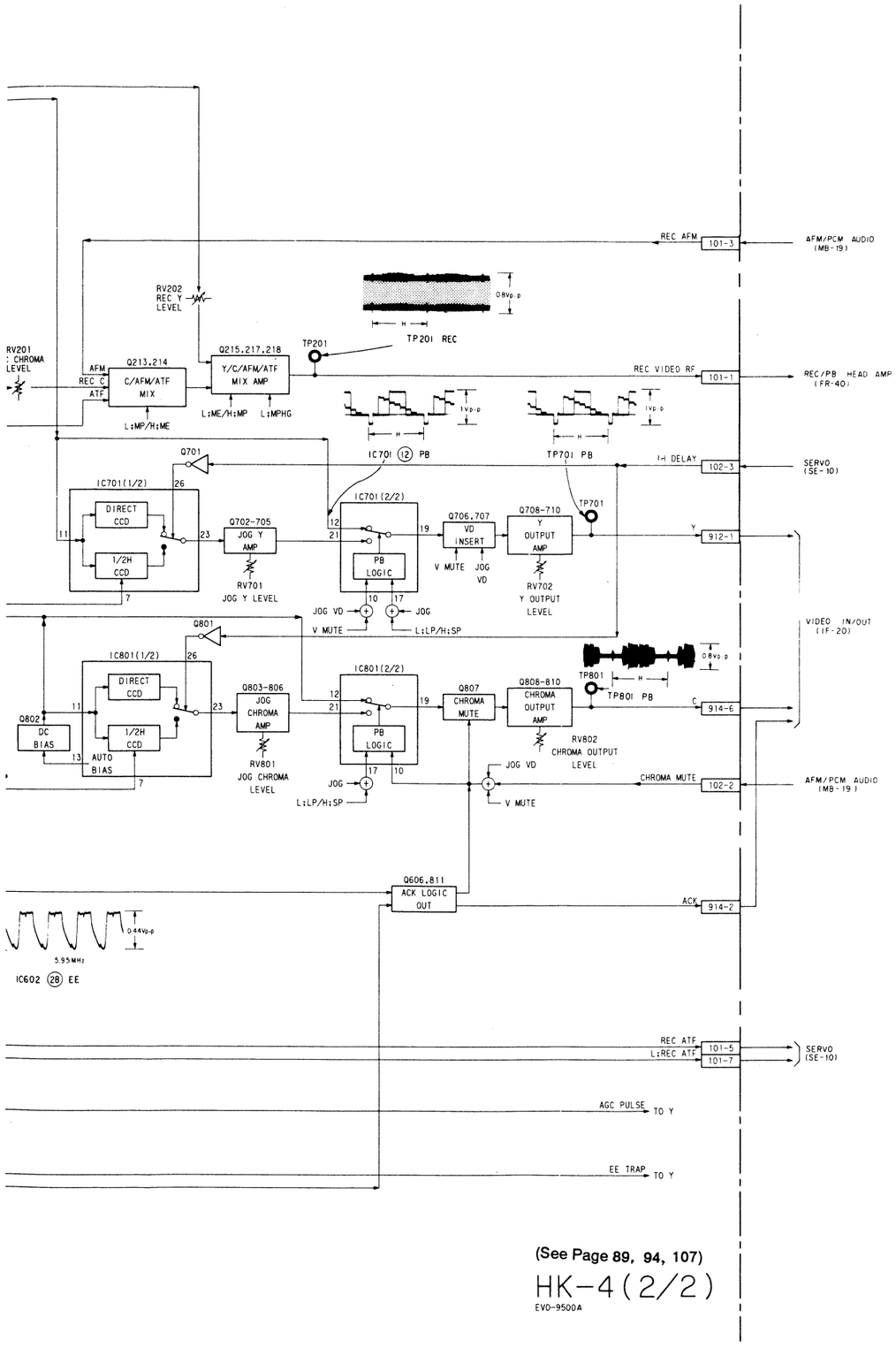

(See Page 89, 94, 107)

HK-4 (2/2)

EVO-9500A

3-6. VIDEO IN/OUT BLOCK DIAGRAM

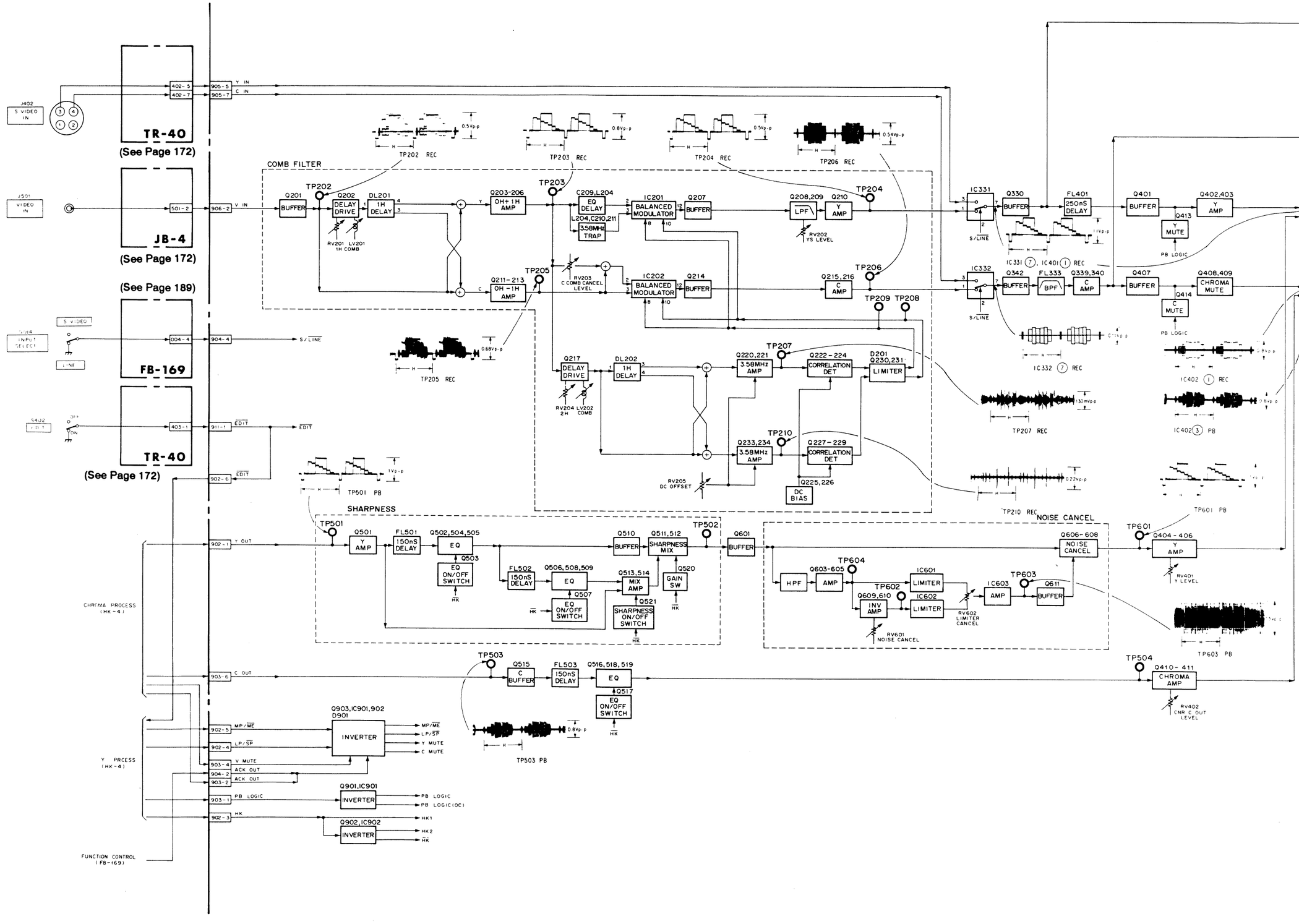

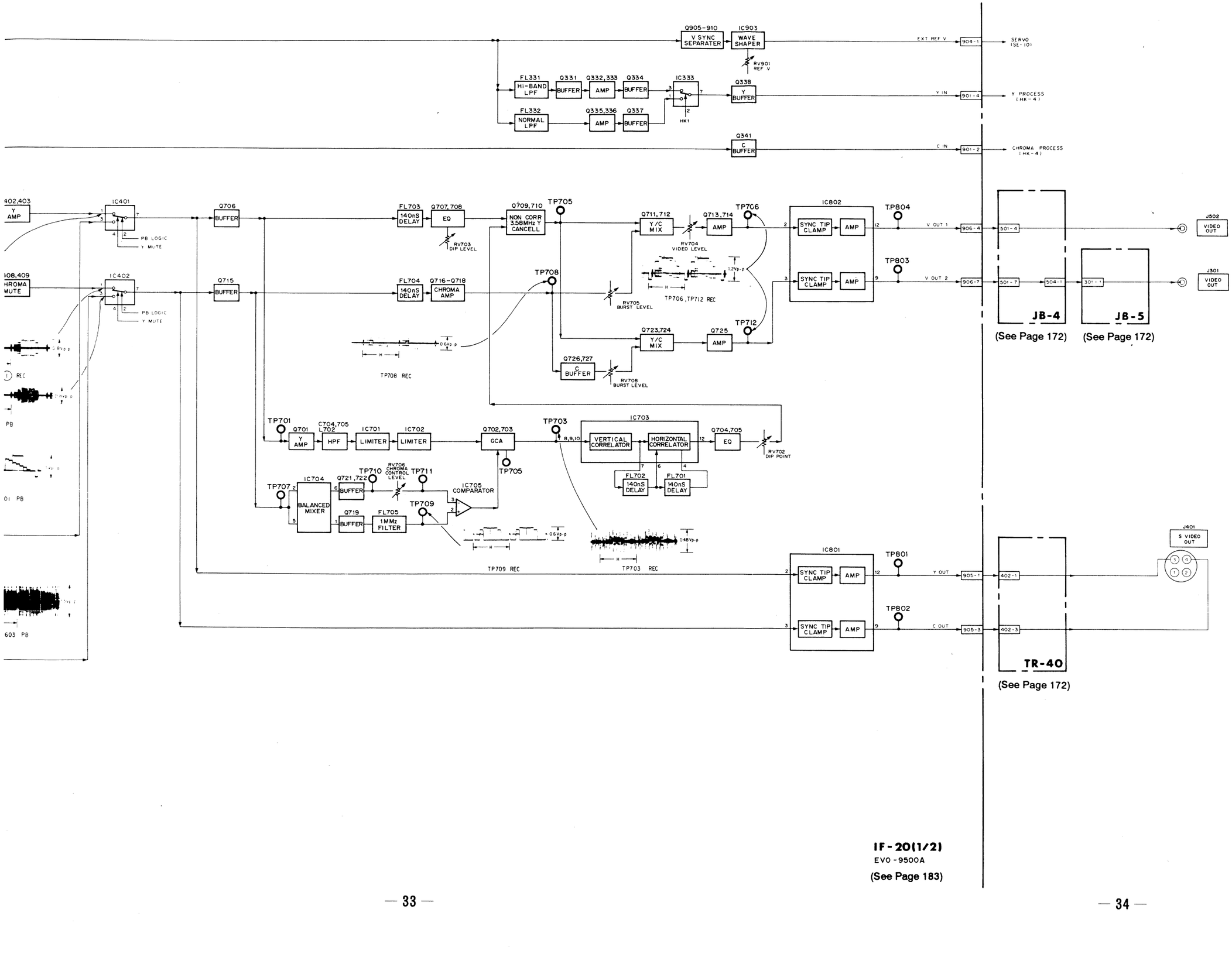
Q905-910
V SYNC SEPARATER
IC903
WAVE SHAPER
RV901 REF V
EXT REF V
904-1
SERVO (SE-10)
FL331
Hi-BAND LPF
Q331
BUFFER
Q332,333
AMP
Q334
BUFFER
IC333
Q338
Y BUFFER
Y IN
901-4
Y PROCESS (HK-4)
FL332
NORMAL LPF
Q335,336
AMP
Q337
BUFFER
HK1
Q341
C BUFFER
C IN
901-2
CHROMA PROCESS (HK-4)
402,403
Y AMP
IC401
PB LOGIC
Y MUTE
Q706
BUFFER
FL703
140nS DELAY
Q707,708
EQ
RV703 DIP LEVEL
Q709,710
NON CORR 3.58MHz Y CANCELL
TP705
Q711,712
Y/C MIX
RV704 VIDEO LEVEL
Q713,714
AMP
TP706
IC802
SYNC TIP CLAMP
AMP
TP804
V OUT 1
906-4
501-4
J502
VIDEO OUT
408,409
CHROMA MUTE
IC402
PB LOGIC
Y MUTE
Q715
BUFFER
FL704
140nS DELAY
Q716-Q718
CHROMA AMP
TP708
RV705 BURST LEVEL
1.2Vp-p
H
TP706, TP712 REC
TP803
V OUT 2
906-7
501-7
504-1
301-1
J301
VIDEO OUT
JB-4
JB-5
(See Page 172)
(See Page 172)
TP712
Q723,724
Y/C MIX
Q725
AMP
Q726,727
C BUFFER
RV708 BURST LEVEL
0.6Vp-p
TP708 REC
REC
PB
01 PB
603 PB
TP701
Q701
Y AMP
C704,705
L702
HPF
IC701
LIMITER
IC702
LIMITER
Q702,703
GCA
TP703
8,9,10
IC703
VERTICAL CORRELATOR
HORIZONTAL CORRELATOR
12
Q704,705
EQ
RV702 DIP POINT
7
6
4
FL702
140nS DELAY
FL701
140nS DELAY
TP705
TP707
IC704
BALANCED MIXER
Q721,722
BUFFER
TP710
RV706 CHROMA CONTROL LEVEL
TP711
IC705 COMPARATOR
TP709
Q719
BUFFER
FL705
1MMz FILTER
0.6Vp-p
0.48Vp-p
H
TP709 REC
TP703 REC
IC801
SYNC TIP CLAMP
AMP
TP801
Y OUT
905-1
402-1
J401
S VIDEO OUT
TP802
C OUT
905-3
402-3
TR-40
(See Page 172)
IF-201(1/2)
EVO-9500A
(See Page 183)

3-7. SERVO BLOCK DIAGRAM

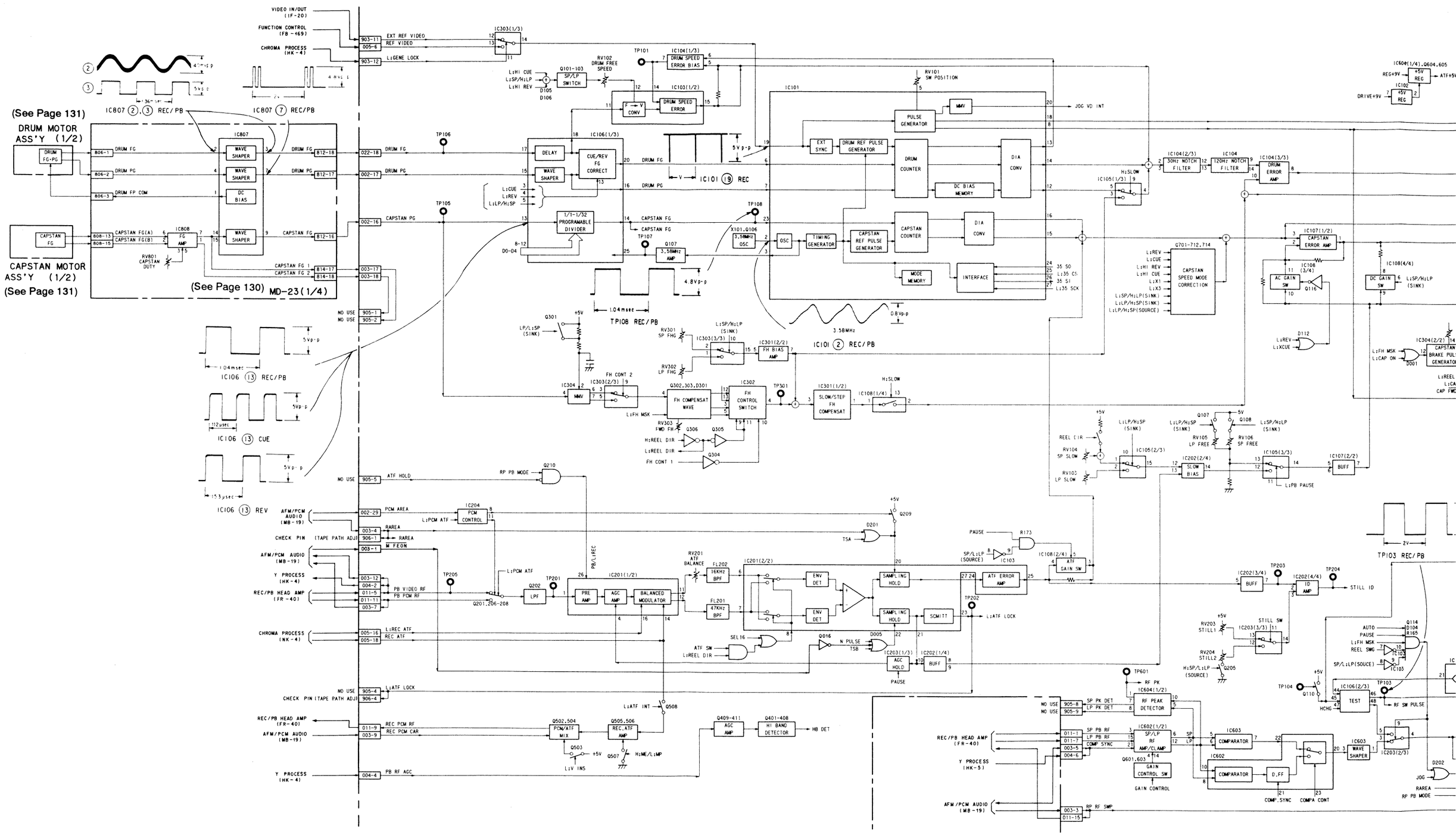

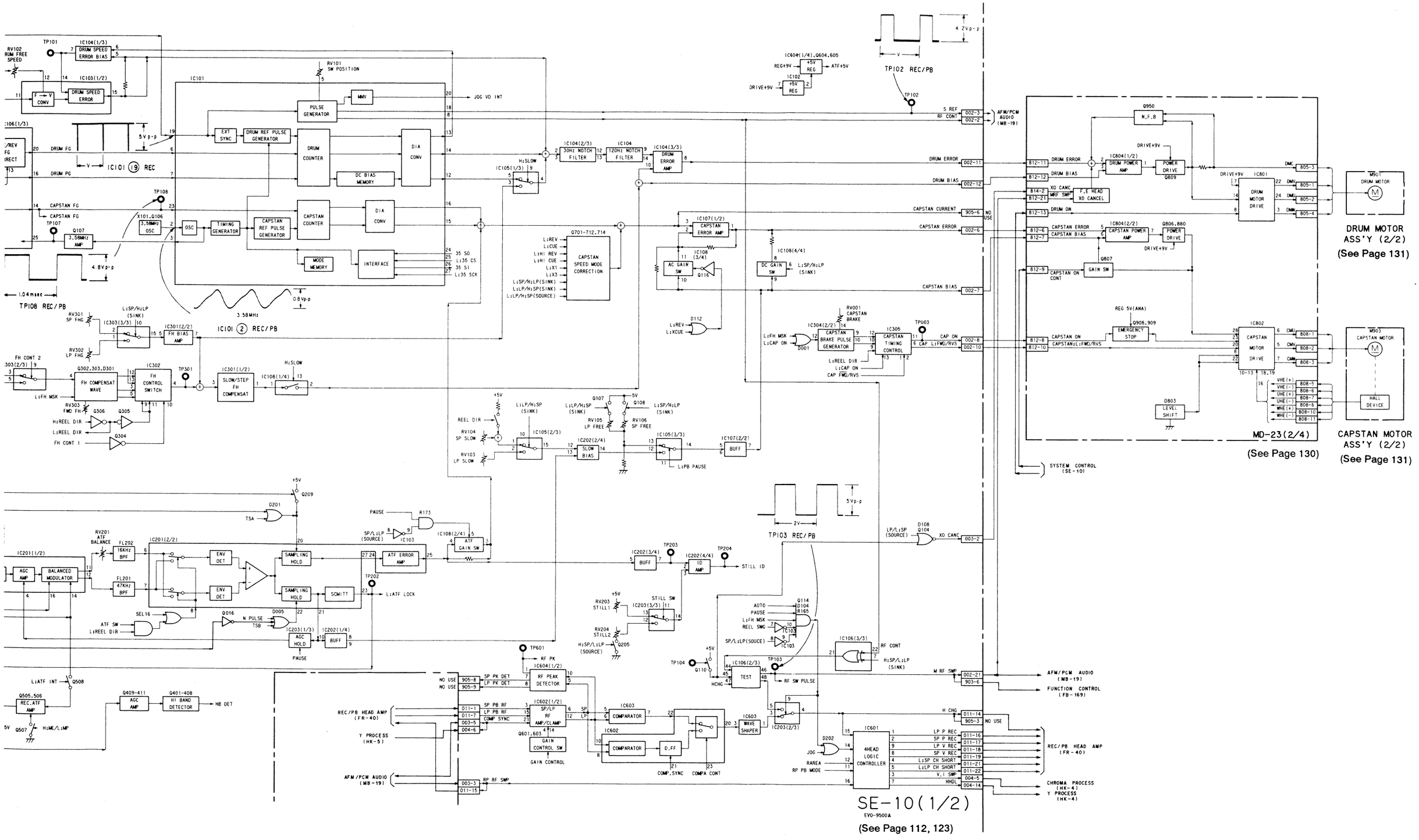
TP101
IC104(1/3)
DRUM SPEED ERROR BIAS
RV102 RUM FREE SPEED
IC103(1/2)
F → V CONV
DRUM SPEED ERROR
IC101
RV101 SW POSITION
PULSE GENERATOR
MMV
JOG VD INT
EXT SYNC
DRUM REF PULSE GENERATOR
DRUM COUNTER
DIA CONV
DC BIAS MEMORY
DRUM FG
DRUM PG
5Vp-p
V
IC101 ⑲ REC
CAPSTAN FG
TP108
X101,Q106 3.58MHz OSC
TP107
Q107 3.58MHz AMP
OSC
TIMING GENERATOR
CAPSTAN REF PULSE GENERATOR
CAPSTAN COUNTER
MODE MEMORY
INTERFACE
35 SO
35 CS
35 SI
35 SCK
4.8Vp-p
1.04msec
TP108 REC/PB
3.58MHz
0.8Vp-p
IC101 ② REC/PB
H:SLOW
IC105(1/3)
IC104(2/3) 30Hz NOTCH FILTER
IC104 120Hz NOTCH FILTER
IC104(3/3) DRUM ERROR AMP
IC107(1/2) CAPSTAN ERROR AMP
IC108 (3/4) AC GAIN SW
Q116
IC108(4/4) DC GAIN SW
L:SP/H:LP (SINK)
D112
L:REV
L:CUE
L:HI REV
L:HI CUE
L:X1
L:X3
L:SP/H:LP(SINK)
L:LP/H:SP(SINK)
L:LP/H:SP(SOURCE)
Q701-712,714
CAPSTAN SPEED MODE CORRECTION
IC604(1/4),Q604,605
REG+9V
+5V REG
ATF+5V
IC102
DRIVE+9V
4.2Vp-p
TP102 REC/PB
TP102
S REF
RF CONT
002-3
002-2
AFM/PCM AUDIO (MB-19)
DRUM ERROR
002-11
DRUM BIAS
002-12
CAPSTAN CURRENT
905-6
NO USE
CAPSTAN ERROR
002-6
CAPSTAN BIAS
002-7
RV001 CAPSTAN BRAKE
IC304(2/2) CAPSTAN BRAKE PULSE GENERATOR
IC305 CAPSTAN TIMING CONTROL
TP003
CAP ON
002-8
002-10
L:FH MSK
L:CAP ON
D001
L:REEL DIR
L:CAP ON
CAP FWD/RVS
Q950
N.F.B
DRIVE+9V
IC804(1/2) DRUM POWER AMP
POWER DRIVE
Q809
812-11
DRUM ERROR
812-12
DRUM BIAS
814-2
812-21
XO CANC
MRF SW
F.E HEAD XO CANCEL
812-13
DRUM ON
IC801
DRUM MOTOR DRIVE
DMC
DMV
DMU
DMW
805-3
805-1
805-2
805-4
M901 DRUM MOTOR
DRUM MOTOR ASS'Y (2/2)
(See Page 131)
IC804(2/2) CAPSTAN POWER AMP
Q806,880 POWER DRIVE
812-6
CAPSTAN ERROR
812-7
CAPSTAN BIAS
Q807
GAIN SW
812-9
CAPSTAN ON CONT
REG 5V(ANA)
Q908,909
EMERGENCY STOP
IC802
CAPSTAN MOTOR DRIVE
CMU
CMV
CMW
808-1
808-2
808-3
812-8
CAPSTAN ON
812-10
CAPSTAN;L:FWD/RVS
10-13 + 18,19
VHE(+)
VHE(-)
UHE(+)
UHE(-)
WHE(+)
WHE(-)
808-5
808-6
808-7
808-8
808-10
808-11
M903 CAPSTAN MOTOR
HALL DEVICE
CAPSTAN MOTOR ASS'Y (2/2)
(See Page 131)
D803 LEVEL SHIFT
MD-23(2/4)
(See Page 130)
SYSTEM CONTROL (SE-10)
FH CONT 2
IC303(2/3)
RV301 SP FHG
RV302 LP FHG
IC303(3/3)
IC301(2/2) FH BIAS AMP
L:SP/H:LP (SINK)
Q302,303,D301 FH COMPENSAT WAVE
IC302 FH CONTROL SWITCH
TP301
IC301(1/2) SLOW/STEP FH COMPENSAT
IC108(1/4)
H:SLOW
L:FH MSK
RV303 FWD FHG
Q306
Q305
H:REEL DIR
L:REEL DIR
Q304
FH CONT 1
+5V
REEL DIR
RV104 SP SLOW
RV103 LP SLOW
IC105(2/3)
L:LP/H:SP (SINK)
Q107
Q108
L:SP/H:LP (SINK)
RV105 LP FREE
RV106 SP FREE
IC105(3/3)
IC202(2/4) SLOW BIAS
L:PB PAUSE
IC107(2/2) BUFF
5Vp-p
2V
TP103 REC/PB
D108 Q104 XO CANC
LP/L:SP (SOURCE)
003-2
Q209
D201
TSA
PAUSE
R173
SP/L:LP (SOURCE)
IC103
IC108(2/4) ATF GAIN SW
RV201 ATF BALANCE
FL202 16KHz BPF
FL201 47KHz BPF
IC201(2/2)
ENV DET
SAMPLING HOLD
ATF ERROR AMP
SCMITT
L:ATF LOCK
IC201(1/2)
AGC AMP
BALANCED MODULATOR
IC202(3/4) BUFF
TP203
IC202(4/4) ID AMP
TP204
ST1 ID
RV203 STILL1
RV204 STILL2
STILL SW
IC203(3/3)
Q205
H:SP/L:LP (SOURCE)
AUTO PAUSE
L:FH MSK
REEL SW
Q114
D104
R165
SP/L:LP(SOUCE)
TP601
RF PK
IC604(1/2) RF PEAK DETECTOR
SP PK DET
LP PK DET
NO USE
905-8
905-9
IC106(3/3)
RF CONT
H:SP/L:LP (SINK)
TP104
Q110
HCHG
IC106(2/3) TEST
TP103
RF SW PULSE
M RF SW
002-21
903-6
AFM/PCM AUDIO (MB-19)
FUNCTION CONTROL (FB-169)
SEL16
ATF SW
L:REEL DIR
Q016
N PULSE
TSB
D005
IC203(1/3) AGC HOLD
PAUSE
IC202(1/4) BUFF
L:ATF INT
Q508
Q505,506 REC.ATF AMP
5V
Q507
H:ME/L:MP
Q409-411 AGC AMP
Q401-408 HI BAND DETECTOR
HB DET
REC/PB HEAD AMP (FR-40)
011-1
011-7
003-5
004-6
SP PB RF
LP PB RF
COMP SYNC
IC602(1/2) SP/LP RF AMP/CLAMP
Q601,603 GAIN CONTROL SW
GAIN CONTROL
Y PROCESS (HK-5)
IC603 COMPARATOR
IC602 COMPARATOR
D.FF
COMP.SYNC
COMPA CONT
IC603 WAVE SHAPER
IC203(2/3)
H CHG
905-3
NO USE
AFM/PCM AUDIO (MB-19)
003-3
011-15
RP RF SW
IC601 4HEAD LOGIC CONTROLLER
D202
JOG
RAREA
RP PB MODE
LP P REC
SP P REC
LP V REC
SP V REC
L:SP CH SHORT
L:LP CH SHORT
V.I SWP
HHDL
011-14
011-16
011-17
011-18
011-19
011-21
011-22
004-5
004-14
REC/PB HEAD AMP (FR-40)
CHROMA PROCESS (HK-4)
Y PROCESS (HK-4)
SE-10(1/2)
EVO-9500A
(See Page 112, 123)

3-8. SYSTEM CONTROL BLOCK DIAGRAM

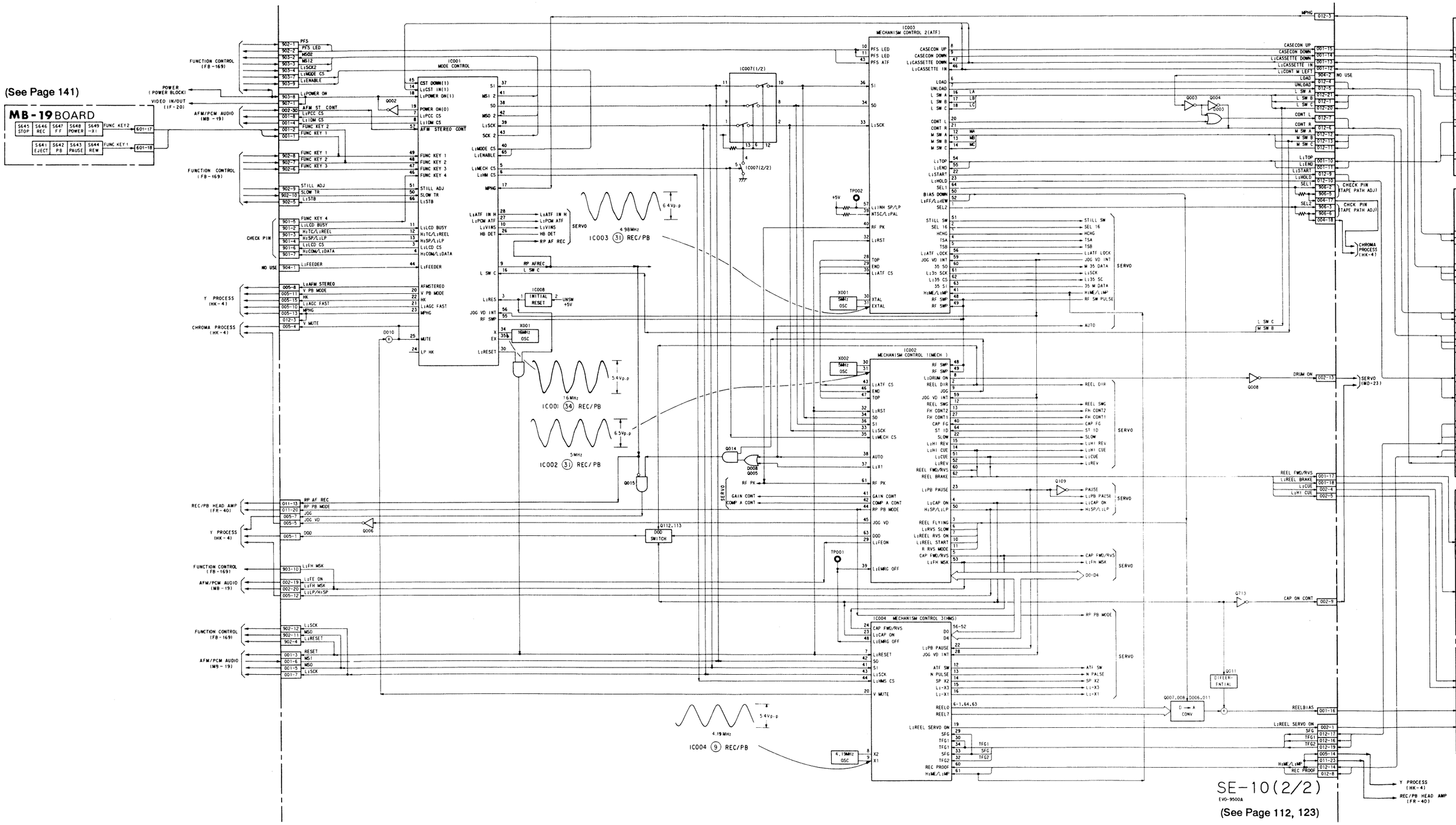

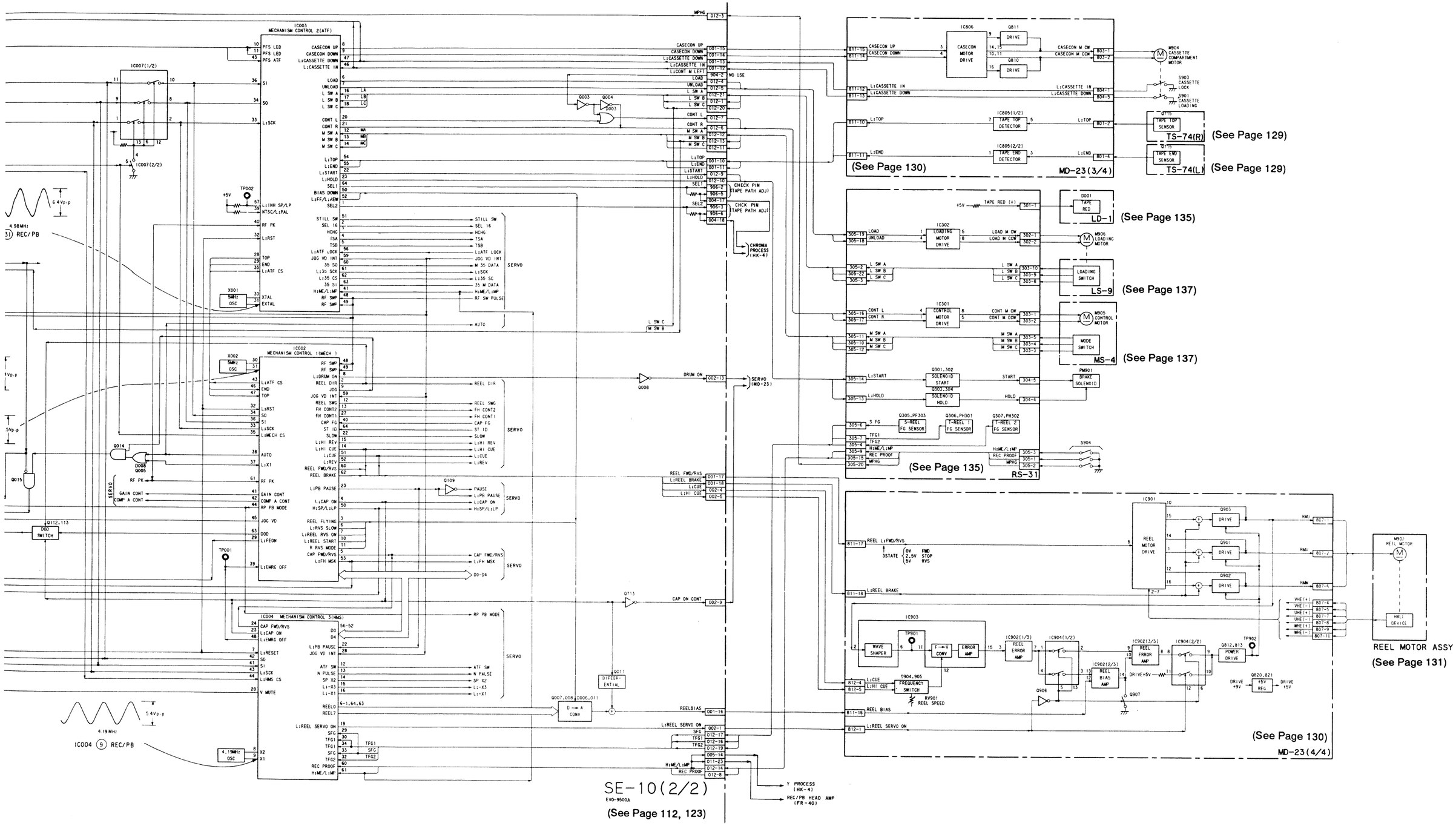
IC003 MECHANISM CONTROL 2(ATF)
IC007(1/2)
IC007(2/2)
TP002
X001 5MHz OSC
4.98MHz
REC/PB
IC002 MECHANISM CONTROL 1(MECH)
X002 5MHz OSC
IC004 MECHANISM CONTROL 3(HMS)
TP001
Q014
D008 Q005
Q015
Q112,113 DOD SWITCH
4.19MHz OSC
4.19MHz
IC004 (9) REC/PB
SERVO
MPHG
CASECON UP
CASECON DOWN
L:CASSETTE DOWN
L:CASSETTE IN
L:CONT M LEFT
NO USE
LOAD
UNLOAD
L SW A
L SW B
L SW C
CONT L
CONT R
M SW A
M SW B
M SW C
L:TOP
L:END
L:START
L:HOLD
SEL1
SEL2
CHECK PIN (TAPE PATH ADJ)
CHROMA PROCESS (HK-4)
Q003 Q004 D003
DRUM ON
Q008
SERVO (MD-23)
REEL FWD/RVS
REEL BRAKE
L:CUE
L:HI CUE
CAP ON CONT
Q713
DIFFERENTIAL
Q011
Q007,008,D006,011
D→A CONV
REELBIAS
REEL SERVO ON
SFG
TFG1
TFG2
H:ME/L:MP
REC PROOF
Y PROCESS (HK-4)
REC/PB HEAD AMP (FR-40)
SE-10(2/2)
EVO-9500A
(See Page 112, 123)
IC806 CASECON MOTOR DRIVE
Q811 DRIVE
Q810 DRIVE
M904 CASSETTE COMPARTMENT MOTOR
S903 CASSETTE LOCK
S901 CASSETTE LOADING
IC805(1/2) TAPE TOP DETECTOR
IC805(2/2) TAPE END DETECTOR
Q715 TAPE TOP SENSOR
TS-74(R)
Q715 TAPE END SENSOR
TS-74(L)
(See Page 129)
(See Page 129)
(See Page 130)
MD-23(3/4)
IC302 LOADING MOTOR DRIVE
D001 TAPE RED
LD-1
(See Page 135)
M906 LOADING MOTOR
LOADING SWITCH
LS-9
(See Page 137)
IC301 CONTROL MOTOR DRIVE
M905 CONTROL MOTOR
MODE SWITCH
MS-4
(See Page 137)
Q301,302 SOLENOID START
Q303,304 SOLENOID HOLD
PM901 BRAKE SOLENOID
Q305,PF303 S-REEL FG SENSOR
Q306,PH301 T-REEL 1 FG SENSOR
Q307,PH302 T-REEL 2 FG SENSOR
S904
(See Page 135)
RS-31
IC901 REEL MOTOR DRIVE
Q903 DRIVE
Q901 DRIVE
Q902 DRIVE
IC903
TP901
WAVE SHAPER
F→V CONV
ERROR AMP
IC902(1/3) REEL ERROR AMP
IC904(1/2)
IC902(3/3) REEL ERROR AMP
IC904(2/2)
TP902
Q812,813 POWER DRIVE
IC902(2/3) REEL BIAS AMP
Q904,905 FREQUENCY SWITCH
RV901 REEL SPEED
Q906
Q907
Q820,821 +5V REG
M907 REEL MOTOR
HALL DEVICE
REEL MOTOR ASSY
(See Page 131)
(See Page 130)
MD-23(4/4)

SYSTEM CONTROL — VIDEO BLOCK INTERFACE

SIGNAL	I/O	PIN No.	STOP	FF	REW	REC	REC• PAUSE	AUDIO DUB	AUDIO DUB PAUSE	PB	PB• PAUSE	× 1	− × 1	× 2	− × 3	CUE (× 9)	REV (− × 7)	SLOW (1/5)	SLOW (− 1/5)
G	O	Pin ⑨ of IC002	L	L	L	L	L	H	H	L	H	H	H	H	H	H	H	H	H
ī	O	Pin ㊲ of IC002	H	H	H	H	H	H	H	H	H	L	H	H	H	H	H	H	H
IN CONT	O	Pin ㊶ of IC002	H	H	H	H	H	H	H	H ∗ 1	H ∗ 1	H ∗ 1	H ∗ 1	H ∗ 1	H ∗ 1	H ∗ 1	H ∗ 1	H ∗ 1	H ∗ 1
MPA CONT	O	Pin ㊷ of IC002	H	H	H	H	H	H	L	L	L	L	L	L	L	L	L	L	L
G VD	O	Pin ㊺ of IC002	H					$\overline{\text{VD}}$ pulse		H	$\overline{\text{VD}}$ pulse								
/LP	O	Pin ㊿ of IC002	It is "H" when recording or playback in SP mode.																
D	O	Pin ㊸ of IC002	L	L	L	L	L	H	L	L	L	L	H	H	H	H	H	L	H
EO MUTE	O	Pin ⑳ of IC004	L	L	L	L	L	L	L	L	L	L	L	L	L	L	L	L	L
/MP	O	Pin ⑭ of CN012	It is "L" when using MP tape or MPHG tape.																

t is "L" when LP mode.

SYSTEM CONTROL — SERVO (CAPSTAN MOTOR) BLOCK INTERFACE

SIGNAL	I/O	PIN No.	STOP	FF	REW	REC	REC• PAUSE	AUDIO DUB	AUDIO DUB PAUSE	PB	PB• PAUSE	× 1	− × 1	× 2	− × 3	CUE (× 9)	REV (− × 7)	SLOW (1/5)	SLOW (− 1/5)
ON	O	Pin ④ of IC002	H	H	H	L	H	L	H	L	H	L	L	L	L	L	L	∗ 1	∗ 1
FWD/RVS	O	Pin ⑤ of IC002	L	L	L	L	L	L	L	L	L	L	H	L	H	L	H	∗ 1	∗ 1
− D4	O	Pin ⑯ ~ ⑳ of IC002	"1"	"1"	"1"	"1"	"1"	"1"	"1"	"1"	"1"	"1"	"1"	"2"	"2"	"9"	"7"	"1"	"1"
PAUSE	O	Pin ㉓ of IC002	H	H	H	H	H	H	L	H	L	H	H	H	H	H	H	L	L
Ē	O	Pin ㊶ of IC002	H	H	H	H	H	H	H	H	H	H	H	H	H	L	H	H	H
ī	O	Pin ㊷ of IC002	H	H	H	H	H	H	H	H	H	H	H	H	H	H	L	H	H
1	O	Pin ⑯ of IC004	H	H	H	H	H	H	H	H	H	H	L	H	H	H	H	H	H
3	O	Pin ⑮ of IC004	H	H	H	H	H	H	H	H	H	H	H	H	L	H	H	H	H

D4 MSB
D0 LSB
Decimal

ulse output

SYSTEM CONTROL — SERVO (DRUM MOTOR) BLOCK INTERFACE

SIGNAL	I/O	PIN No.	STOP	FF	REW	REC	REC• PAUSE	AUDIO DUB	AUDIO DUB PAUSE	PB	PB• PAUSE	× 1	− × 1	× 2	− × 3	CUE (× 9)	REV (− × 7)	SLOW (1/5)	SLOW (− 1/5)
M ON	O	Pin ⑧ of IC002	H	L	L	L	L	L	L	L	L	L	L	L	L	L	L	L	L
CONT2	O	Pin ⑬ of IC002	L	L	L	L	L	L	L	L	L	L	L	L	L	L	L	∗ 1	∗ 1
W	O	Pin ㉒ of IC002	L	L	L	L	L	L	L	L	L	L	L	L	L	L	L	H	H
CONT1	O	Pin ㉗ of IC002	L	L	L	L	L	L	L	L	L	L	L	L	L	L	L	∗ 1	∗ 1
ASK	O	Pin ㊸ of IC002	H	H	H	H	H	H	H	H	H	H	H	H	H	H	H	∗ 1	∗ 1

lse output

3-12. S

S
REEL D
REEL FI
REEL R
REEL R
REEL S
R RVS M
REEL SV
REEL FV
REEL BF
REEL 0~
RELL SE

*1. Pulse
*2. Chang
*3. Chang

3-13. S

S
RP PB M
JOG VD
SEL 2
SEL16
TSA
TSB
M RF SW
SEL 1
ATF SW
N PULSE

*1. Pulse
*2. Pulse

3-12. SYSTEM CONTROL — SERVO (REEL MOTOR) BLOCK INTERFACE

SIGNAL	I/O	MODE / PIN No.	STOP	FF	REW	REC	REC• PAUSE	AUDIO DUB	AUDIO DUB PAUSE	PB	PB• PAUSE	× 1	− × 1	× 2	− × 3	CUE (× 9)	REV (− × 7)	SLOW (1/5)	SLOW (− 1/5)	
REEL DIR	O	Pin ② of IC002	H/L	L	H	L	L	L	L	L	H/L	L	H	L	H	L	H	L	H	
REEL FLYING	O	Pin ③ of IC002	Normally "L". "H" pulse when change from STOP to FF/REW mode.																	
$\overline{\text{REEL RVS SLOW}}$	O	Pin ⑥ of IC002	H	H	H	H	H	H	H	H	H	H	H	H	H	H	H	H	L	
$\overline{\text{REEL RVS ON}}$	O	Pin ⑦ of IC002	Normally "H". "L" pulse when change from FORWARD to REVERSE (over −×1 speed).																	
$\overline{\text{REEL START}}$	O	Pin ⑩ of IC002	Normally "H". "L" pulse when change from STOP to FF/REW mode.																	
R RVS MODE	O	Pin ⑪ of IC002	L	L	L	L	L	L	L	L	L	L	L	L	L	L	L	L	L	
REEL SWG	O	Pin ⑫ of IC002	Normally "L". "H" pulse when change the direction from FORWARD to REVERSE, and vice versa.																	
REEL $\overline{\text{FWD}}$/RVS	O	Pin ⑭ of IC002	2.5V	L	H	L	2.5V	L	2.5V	L	2.5V	L	H	L	H	L	H	"H" Pulse	"L" Pulse	
REEL BRK	O	Pin ⑯ of IC002	Normally "H". "L" pulse when change from REC to REC•PAUSE mode.																	
REEL 0~7	O	Pin ①~⑥, ⑬, ⑭ of IC004	"70"	"96"	"96"	"54"	"54"	"54"	"54"	"54"	"70"	"54"	* 2	"70"	* 2	* 3	* 3	"70"	"63"	REEL 7 MSB REEL 0 LSB BCD code
$\overline{\text{RELL SERVO ON}}$	O	Pin ⑱ of IC004	H	H	H	H	H	H	H	H	H	L	H	L	H	L	H	H	H	

*1. Pulse output
*2. Changes according to the period of SFG
*3. Changes according to the tape speed (SP/LP)

3-13. SYSTEM CONTROL — SERVO (ATF SERVO) BLOCK INTERFACE

SIGNAL	I/O	MODE / PIN No.	STOP	FF	REW	REC	REC• PAUSE	AUDIO DUB	AUDIO DUB PAUSE	PB	PB• PAUSE	× 1	− × 1	× 2	− × 3	CUE (× 9)	REV (− × 7)	SLOW (1/5)	SLOW (− 1/5)
RP PB MODE	O	Pin ㊹ of IC002	H	H	H	L	L	H	H	H	H	H	H	H	H	H	H	H	H
JOG VD INT	I	Pin ㊸ of IC002, 003	L	Pulse input															
SEL 2	O	Pin ① of IC003	H	H	H	* 2	* 2	* 2	* 2	* 2	* 2	* 2	* 2	* 2	* 2	* 2	* 2	* 2	* 2
SEL16	O	Pin ② of IC003	L	L	L	* 2	L	* 2	L	* 2	L	* 2	* 2	* 2	* 2	* 2	* 2	* 2	* 2
TSA	O	Pin ④ of IC003	L	L	L	L	L	* 2	L	* 2	L	* 2	* 2	* 2	* 2	L	L	L	L
TSB	O	Pin ⑤ of IC003	L	L	L	L	L	* 2	L	* 2	L	* 2	* 2	* 2	* 2	L	L	L	L
M RF SW PULSE	I	Pin ㊽, ㊾ of IC003	H/L	FIELD sync pulse															
SEL 1	O	Pin ㊿ of IC003	H	H	H	* 2	* 2	* 2	* 2	* 2	* 2	* 2	* 2	* 2	* 2	* 2	* 2	* 2	* 2
ATF SW	O	Pin ⑫ of IC004	L	L	L	L	L	L	* 1	L	* 1	L	L	L	L	L	L	* 1	* 1
N PULSE	O	Pin ⑬ of IC004	L	L	L	L	L	L	* 1	L	* 1	L	L	L	L	L	L	* 1	* 1

*1. Pulse output
*2. Pulse output with ATF sequence

14. SYSTEM CONTROL — SERVO (STILL) BLOCK INTERFACE

SIGNAL	I/O	MODE PIN No.	STOP	FF	REW	REC	REC• PAUSE	AUDIO DUB	AUDIO DUB PAUSE	PB	PB• PAUSE	× 1	− × 1	× 2	− × 3	CUE (× 9)	REV (− × 7)	SLOW (1/5)	SLOW (− 1/5)
F PK	I	Pin 61 of IC002	Pulse input in PB PAUSE mode.																
TID	I	Pin 64 of IC002	Pulse input in PB PAUSE mode.																
TILL SW	O	Pin 51 of IC003	V duration pulse input (‾____)																

5. SYSTEM CONTROL — SERVO (HEAD SELECTING) BLOCK INTERFACE

SIGNAL	I/O	MODE PIN No.	STOP	FF	REW	REC	REC• PAUSE	AUDIO DUB	AUDIO DUB PAUSE	PB	PB• PAUSE	× 1	− × 1	× 2	− × 3	CUE (× 9)	REV (− × 7)	SLOW (1/5)	SLOW (− 1/5)
UTO	O	Pin 38 of IC002	L	L	L	L	L	L	L	L	L	L	L	L	L	H	H	∗1	∗1
P/$\overline{LP}$	O	Pin 50 of IC002	"H" when record or play back in SP mode.																
CHG	O	Pin 3 of IC003	∗1	∗1	∗1	∗1	∗1	∗1	∗2	∗1	∗2	∗1	∗2	∗2	∗2	∗2	∗2	∗2	∗2

Depending upon a tape speed (SP/LP).
Pulse output

6. SYSTEM CONTROL — SERVO (OTHERS) BLOCK INTERFACE

SIGNAL	I/O	MODE PIN No.	STOP	FF	REW	REC	REC• PAUSE	AUDIO DUB	AUDIO DUB PAUSE	PB	PB• PAUSE	× 1	− × 1	× 2	− × 3	CUE (× 9)	REV (− × 7)	SLOW (1/5)	SLOW (− 1/5)
OG	O	Pin 9 of IC002	L	L	L	L	L	H	H	L	H	H	H	H	H	H	H	H	H
AP FG	I	Pin 40 of IC002	Undefined			∗1	Undefined	∗1	Undefined	∗1	Undefined	∗1	∗1	∗1	∗1	∗1	∗1	∗1	∗1
ATF LOCK	I	Pin 56 of IC003		∗1	∗1					∗2		∗2	∗2	∗2	∗2	∗1	∗1		

Pulse output
"L" when ATF servo is phase locked.

3-17. SYSTI

SIGNA
LOAD
UNLOAD
CASECON UP
CASECON DO
MA~MC
LA~LC
CONTL
CONTR
$\overline{START}$
$\overline{HOLD}$
$\overline{CST\ IN}$
$\overline{CC\ DOWN}$
$\overline{TOP}$
$\overline{END}$
SFG
TFG1
TFG2
REC PROOF
ME/$\overline{MP}$

*1. Pulse accord

3-17. SYSTEM CONTROL — MD BLOCK INTERFACE

SIGNAL	I/O	PIN No.	STOP	FF	REW	REC	REC• PAUSE	AUDIO DUB	AUDIO DUB PAUSE	PB	PB• PAUSE	× 1	− × 1	× 2	− × 3	CUE (× 9)	REV (− × 7)	SLOW (1/5)	SLOW (− 1/5)
LOAD	O	Pin ⑥ of IC003	Normally "L". "H" in tape threading.																
UNLOAD	O	Pin ⑦ of IC003	Normally "L". "H" in tape unthreading.																
CASECON UP	O	Pin ⑧ of IC003	Normally "L". "H" in cassette unloading.																
CASECON DOWN	O	Pin ⑨ of IC003	Normally "L". "H" in cassette loading.																
MA~MC	I	Pin ⑫⑬⑭ of IC003	"3"	"6"	"6"	"1"	"1"	"1"	"1"	"1"	"1"	"1"	"1"	"1"	"1"	"1"	"1"	"1"	"1"
LA~LC	I	Pin ⑯⑰⑱ of IC003	"3"	"3"	"3"	"3"	"3"	"3"	"3"	"3"	"3"	"3"	"3"	"3"	"3"	"3"	"3"	"3"	"3"
CONTL	O	Pin ⑳ of IC003	Normally "L". "H" when change to mechanism mode.																
CONTR	O	Pin ㉑ of IC003	Normally "L". "H" when change to mechanism mode.																
$\overline{\text{START}}$	O	Pin ㉒ of IC003	H	H	H	H	H	H	H	H	H	H	H	H	H	H	H	H	H
$\overline{\text{HOLD}}$	O	Pin ㉓ of IC003	H	L	L	H	H	H	H	H	H	H	H	H	H	H	H	H	H
$\overline{\text{CST IN}}$	I	Pin ㊻ of IC003	Normally "L". "H" when cassette is ejected.																
$\overline{\text{CC DOWN}}$	I	Pin ㊼ of IC003	"H" in eject condition. "L" when cassette compartment comes down.																
$\overline{\text{TOP}}$	I	Pin ㊹ of IC003	Normally "H". "L" at tape top.	When both signals are "H", it is judged that the cassette is loaded. When "L", it is judged that the cassette is unloaded.															
$\overline{\text{END}}$	I	Pin ㊺ of IC003	Normally "H". "L" at tape end.																
SFG	I	Pin ㉜㉝ of IC004	Undefined	* 1	* 1	* 1	Undefined	* 1	Undefined	* 1	Undefined	* 1	* 1	* 1	* 1	* 1	* 1	* 1	* 1
TFG1	I	Pin ㉞㉟ of IC004	Undefined	* 1	* 1	* 1	Undefined	* 1	Undefined	* 1	Undefined	* 1	* 1	* 1	* 1	* 1	* 1	* 1	* 1
TFG2	I	Pin ㉛ of IC004	Undefined	* 1	* 1	* 1	Undefined	* 1	Undefined	* 1	Undefined	* 1	* 1	* 1	* 1	* 1	* 1	* 1	* 1
REC PROOF	I	Pin ㊿ of IC004	"L" when recording enable cassette tape is inserted.																
ME/$\overline{\text{MP}}$	I	Pin ㊶ of IC004	"L" when MP tape or MPHG tape is used.																

MA MSB
MC LSB
Decimal

LA MSB
LC LSB
Decimal

*1. Pulse according to reel rotation

3-18. MODE CONTROL MICROCOMPUTER — PERIPHERAL CIRCUIT INTERFACE (IC001 (CXP80116) on SE-10 board)

Signal	I/O	PIN No.	Input/Output level
——		1	
——		2	
LCD CS	O	3	Connect to check pin. Pulse train of V interval. (⊓⊓⊓)
COM/DATA	O	4	Connect to check pin. Pulse train of V interval. (⊓∨⊓)
MECH CS	O	5	Chip select signal for mechanism control. Pulse train of V interval. (⊓⊓⊓)
REEL CS	O	6	Chip select signal for reel control. Pulse train of V interval. (⊓⊓⊓)
PCC CS	O	7	Chip select signal for PCM microcomputer. Pulse train of V interval. (⊓⊓⊓)
IDM CS	O	8	Chip select signal for PCM microcomputer. Pulse train of V interval. (⊓⊓⊓)
RP AFREC	O	9	"H" in AUDIO DUB Mode.
VINS	O	10	Normally "H". Video insert signal.
LCD BSUY	I	11	Connect to check pin.
T.C /REEL	O	12	Connect to check pin.
SP/LP SW	I	13	Connect to check pin.
CASETE IN	I	14	"L" when cassette is inserted.
CCDOWN	I	15	"L" when cassette compartment comes down.
L SW C	I	16	"H" Loading switch input.
HG SW	I	17	MPHG tape detection input. "L" when MP or ME cassette is inserted.
POWER ON(I)	I	18	"L" when power is on.
POWER ON(O)	O	19	"H" when power is on.
V PB MODE	O	20	"H" when video circuit is in playback mode.
AGC FAST	O	21	Normally "L".
HK	O	22	"H" when Hi8 cassette is inserted.
MPHG	O	23	"H" when MPHG cassette is inserted.
LPHK		24	Not used.
MUTE(I)	I	25	Normally "L". "H" when change the mode from STOP to PB.
HB DET	I	26	"L" when playback the cassette other than for Hi8.
PCMATF	O	27	Normally "H".
ATF INH	O	28	Normally "H".
AFM STEREO V CONT	O	29	"H" in normal playback. "L" in record.
RESET	O	30	Reset output. "L" in reset.
MP	I	31	Microprocessor mode select terminal-not select. Connect to GND.
RESET(I)	I	32	Reset output. "L" in reset.
Vss		33	Connect to GND.
XTAL	O	34	Crystal oscillator for system clock connection terminal. Oscillating at 16MHz.
EXTAL	I	35	
——		36	
MSI	I	37	Serial data input terminal.
MSO	O	38	Not used.
SCK	I	39	Not used.
MODE CS	I	40	Chip select signal to IC001 on the FB-169board. Pulse train of V interval.

Signal	I/O	PIN No.	Input/Output level
MSI2	I	41	Communication signal between IC001 (Mode controller) on the FB-169. Pulse train of V interval.
MSO2	O	42	Communication signal between IC001 (Mode controller) on the FB-169. Pulse train of V interval.
SCK2	O	43	Communication signal between IC001 (Mode controller) on the FB-169. Pulse train of V interval.
FEEDER	I	44	Not used.
TEST	I	45	Not used. Fix to "H" level.
FUNC KEY4	I	46	Not used.
FUNC KEY3	I	47	Not used.
FUNC KEY2	I	48	Not used.
FUNC KEY1	I	49	Not used.
SLOW TR	I	50	SLOW ADJ input. Voltage according to SLOW ADJ control position. (0-5Vdc)
STILL ADJ	I	51	STILL ADJ input. Voltage according to STILL ADJ control position. (0-5Vdc)
AVss		52	Connect to GND.
AVREF	I	53	Connect to UNSW5V.
AVDD	I	54	Connect to UNSW5V.
SW PLS	I	55	RF SW PULSE input. Pulse train of 2V interval. (⊓⊓)
JOG VD INT	I	56	JOG VD input for digital servo IC (IC101 20035). Interrupt signal for microcomputer. Pulse train of V interval.
AFM STEREO CONT(I)	I	57	Not used. Fix to "H" level.
——		58	
——		59	
——		60	
——		61	
——		62	
——		63	
——		64	
ENABLE	I	65	Communication signal to IC001 (Mode controller) on the FB-169 board. Pulse train of V interval. (⊓⊓⊓)
SP STB	O	66	Not used.
——		67	
——		68	
NT/PAL	I	69	Fix to "H" level.
INTD	I	70	Fix to "H" level.
NMI	I	71	Fix to "H" level.
VDD		72	Connect to UNSW5V.
Vss		73	Connect to GND.
VPP		74	Connect to UNSW5V.
——		75	
——		76	
——		77	
——		78	
——		79	
——		80	

3-19. SYSTEM CONTROL — PCM AUDIO BLOCK INTERFACE

Signal	I/O	PIN No.	Input/Output level
$\overline{\text{FE ON}}$	O	Pin ㉙ of IC002	Normally "H". "L" in recording or AUDIO DUB.
FH MASK	O	Pin ㊸ of IC002	"L" pulse during slow playback. "H" in other playback modes.

3-20. SERVO — VIDEO BLOCK INTERFACE

Signal	I/O	PIN No.	Input/Output level
LP PCM REC	O	Pin ① of IC601	Normally "L". "H" pulse of V period in LP mode recording (including AUDIO DUB).
SP PCM REC	O	Pin ② of IC601	Normally "L". "H" pulse of V period in SP mode recording (including AUDIO DUB).
VI SWP	O	Pin ③ of IC601	2V period 50% duty pulse.
$\overline{\text{SP CH SHORT}}$	O	Pin ④ of IC601	Normally "H". "L" in LP recording/playback mode.
$\overline{\text{LP CH SHORT}}$	O	Pin ⑤ of IC601	Normally "L". "H" in LP recording/playback mode.
HH DL	O	Pin ⑦ of IC601	Normally "H". Pulse of variable speed playback.
SP VIDEO REC	O	Pin ⑧ of IC601	Normally "L". "H" in SP recording mode.
LP VIDEO REC	O	Pin ⑨ of IC601	Normally "L". "H" in LP recording mode.
COMP SYNC	I	Pin ⑥ of CN004	Positive composite sync signal.
REF V	I	Pin ⑥ of CN005	"L" pulse of V interval.
H CHG	O	Pin ⑭ of CN001	"H" in SP recording/playback mode. "L" in LP recording/playback mode. Variable speed playback pulse.

3-21. PCM AUDIO — VIDEO BLOCK INTERFACE

Signal	I/O	PIN No.	Input/Output level
$\overline{\text{M FE ON}}$	O	Pin ① of IC601	Normally "H". "L" in recording. "L" pulse of 2V period in AUDIO DUB.
RP AFTER REC	O	Pin ⑩ of IC601	Normally "L". "H" in AUDIO DUB.
D RF SWP (RP RF SWP)	O	Pin ㉓ of PD-19 board	2V period 50% duty pulse.
RAMP	O	Pin ㊻ of PD-19 board	Normally "L". "H" in AUDIO DUB. ("H" pulse of V interval)
C MUTE	O	Pin ㊹ of PD-19 board	Normally "L". "H" in AUDIO DUB. ("H" pulse of V interval)
HD INSERT	O	Pin ㊺ of PD-19 board	Normally "L". "H" pulse of H period in AUDIO DUB. ("H" Pulse of H interval)
AFTER REC MASC	O	Pin ㊻ of PD-19 board	Normally "L". "H" in AUDIO DUB. ("H" pulse of V interval)

3-22. PCM AUDIO — SERVO BLOCK INTERFACE

Signal	I/O	PIN No.	Input/Output level
RF CONT	I	Pin ㉙㉚ of IC601	2V period 50% duty pulse.
MS REF	I	Pin ⑭ of RD-19 board	"H" pulse of V period.
R AREA	O	Pin ㊼ of RD-19 board	Normally "L". "H" pulse of V period in record (including AUDIO DUB).
D RF SWP	O	Pin ㊽ of RD-19 board	2V period 50% duty pulse.
RF AREA	O	Pin ㊼ of RD-19 board	Normally "L". "H" pulse of V period in record (including AUDIO DUB).
RF CONT SWP	I	Pin ㊽ of RD-19 board	2V period 50% duty pulse.

3-23. PCM AUDIO — AUDIO BLOCK INTERFACE

Signal	I/O	PIN No.	Input/Output level
MONO/$\overline{\text{STE}}$ OUT	O	Pin ⑪ of IC601	Normally "L". "H" when monaural PCM audio signal is played back.
MONO/$\overline{\text{STE}}$ IN	I	Pin ㊴ of IC601	Normally "L". Goes to "H" in microphone input or monaural PCM audio signal is played back by player.
PCM MUTE	O	Pin ㊾ of IC601	"H" when PCM audio signal can not be played back or at the mode transition.
AFM REC/$\overline{\text{PB}}$	O	Pin ㊶ of IC601	Normally "H". "L" in playback (including variable speed playback).
AFM MUTE	O	Pin ㊺ of IC601	Normally "L". "H" in the mode transition.
$\overline{\text{AUEE}}$ PORT	O	Pin ㊻ of IC601	Normally "L". "H" in playback (including variable speed playback).
MODE	O	Pin ㉙ of RD-19 board	Normally "L". "H" in playback (including variable speed playback).

3-24. FUNCTION CONTROL BLOCK DIAGRAM

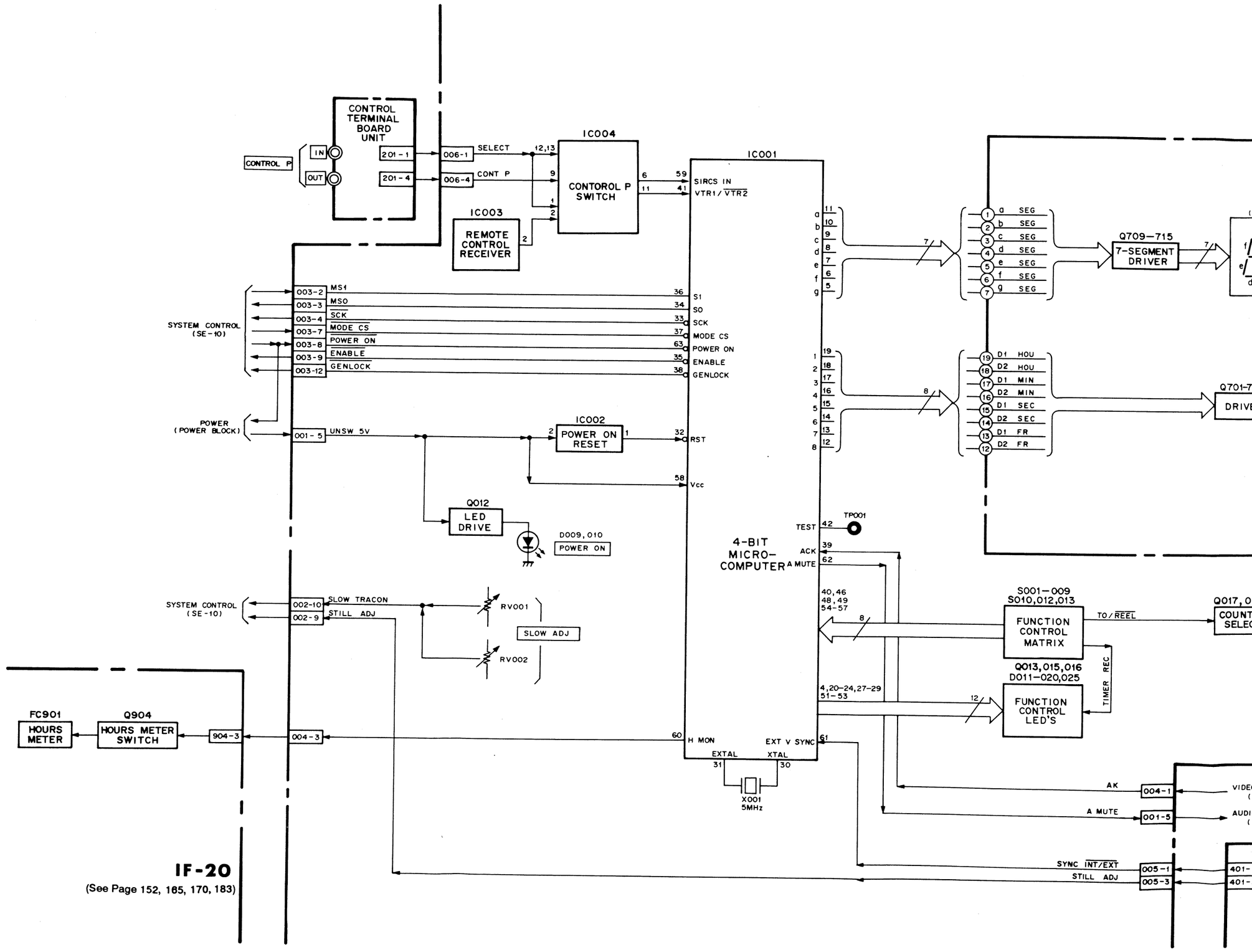

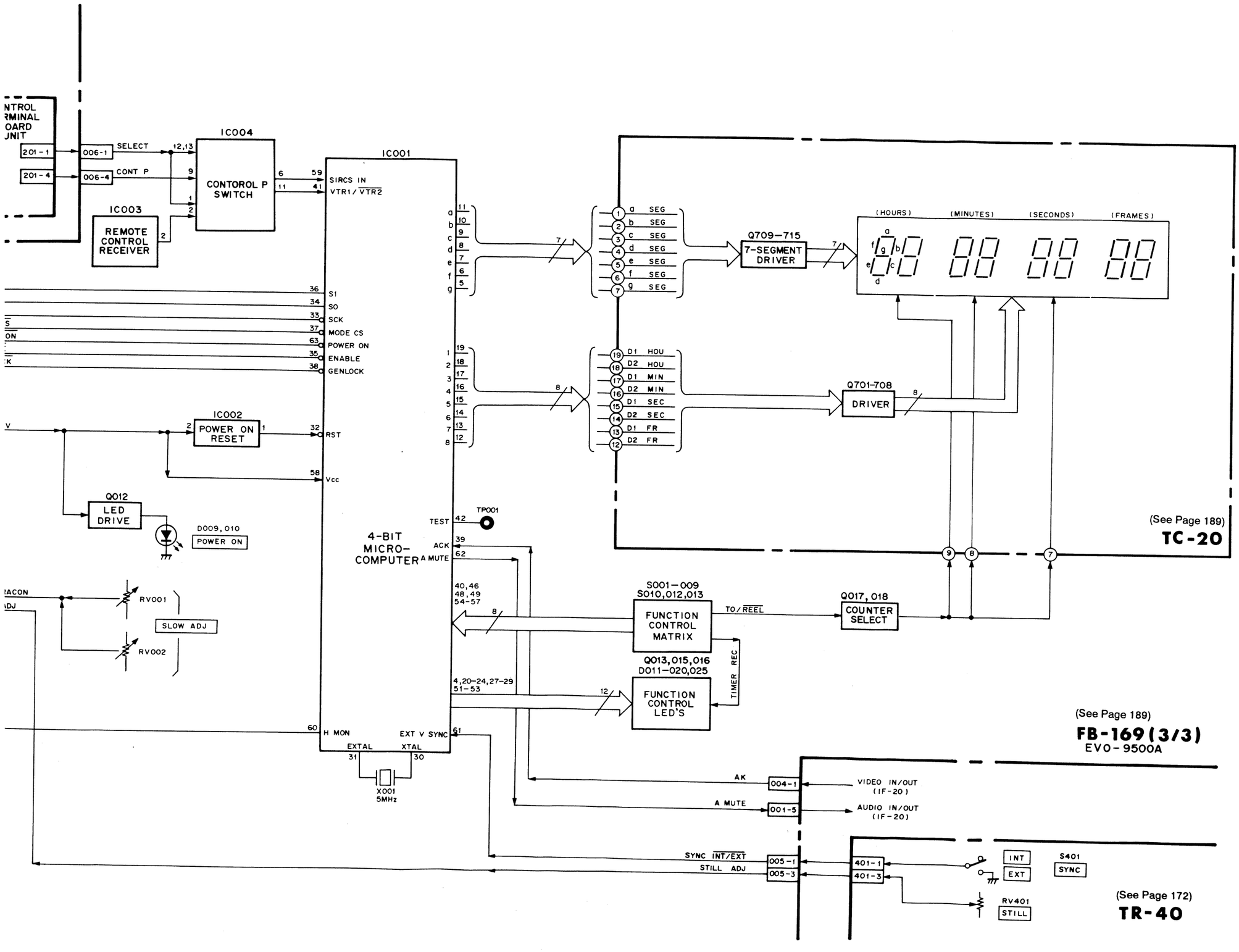
NTROL
RMINAL
OARD
JNIT
201-1
201-4
006-1
006-4
SELECT
CONT P
12,13
9
1
2
IC004
CONTOROL P SWITCH
6
11
59
41
SIRCS IN
VTR1/VTR2
IC003
REMOTE CONTROL RECEIVER
2
IC001
36
34
33
37
63
35
38
S1
SO
SCK
MODE CS
POWER ON
ENABLE
GENLOCK
S
ON
K
V
IC002
POWER ON RESET
2
1
32
RST
58
Vcc
Q012
LED DRIVE
D009,010
POWER ON
TEST
42
TP001
4-BIT MICRO-COMPUTER
ACK
39
A MUTE
62
40,46
48,49
54-57
8
4,20-24,27-29
51-53
12
60
H MON
61
EXT V SYNC
EXTAL
XTAL
31
30
X001
5MHz
RV001
SLOW ADJ
RV002
ACON
DJ
a
b
c
d
e
f
g
11
10
9
8
7
6
5
7
1
2
3
4
5
6
7
8
19
18
17
16
15
14
13
12
8
a SEG
b SEG
c SEG
d SEG
e SEG
f SEG
g SEG
D1 HOU
D2 HOU
D1 MIN
D2 MIN
D1 SEC
D2 SEC
D1 FR
D2 FR
Q709-715
7-SEGMENT DRIVER
Q701-708
DRIVER
(HOURS)
(MINUTES)
(SECONDS)
(FRAMES)
00 00 00 00
9
8
7
(See Page 189)
TC-20
S001-009
S010,012,013
FUNCTION CONTROL MATRIX
TO/REEL
Q017, 018
COUNTER SELECT
Q013,015,016
D011-020,025
FUNCTION CONTROL LED'S
TIMER REC
(See Page 189)
FB-169(3/3)
EVO-9500A
AK
004-1
VIDEO IN/OUT
(IF-20)
A MUTE
001-5
AUDIO IN/OUT
(IF-20)
SYNC INT/EXT
005-1
STILL ADJ
005-3
401-1
401-3
INT
EXT
S401
SYNC
RV401
STILL
(See Page 172)
TR-40

3-25. TIMER MICROCOMPUTER (IC001 (CXP5046) on FB-169 board) INTERFACE

Signal name	I/O	PIN No.	Function
——	O	1	Not used.
——	O	2	
——	O	3	
AU DUB	O	4	DUB LED Control signal. H : LED ON L : LED OFF
g	O	5	Control signal for each segment of 7-segment LED. H : LED ON L : LED OFF 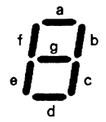
f	O	6	
e	O	7	
d	O	8	
c	O	9	
b	O	10	
a	O	11	
8	O	12	ON/OFF control signal for each segment of 7-segment LED. H : LED OFF L : LED ON 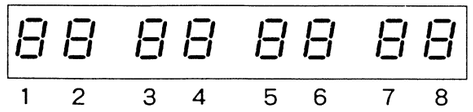 It works following timing. 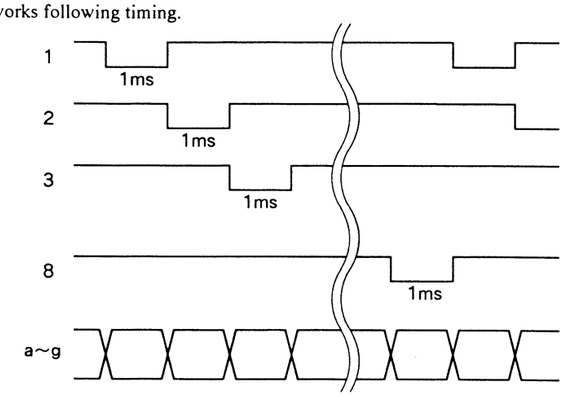
7	O	13	
6	O	14	
5	O	15	
4	O	16	
3	O	17	
2	O	18	
1	O	19	
$\overline{\text{LP LED}}$	O	20	Not used.
$\overline{\text{SP LED}}$	O	21	SP LED control signal. L : LED ON H : LED OFF
$\overline{\text{PCM LED}}$	O	22	PCM LED control signal. L : LED ON H : LED OFF
$\overline{\text{CIN LED}}$	O	23	CASSETTE-IN LED control signal. L : LED ON H : LED OFF
$\overline{\text{PAUSE LED}}$	O	24	PAUSE LED control signal.GND。 L : LED ON H : LED OFF
GND	O	25	GND

Signal name	I/O	PIN No.	Function
Vcc	O	26	UNSW5V.
$\overline{\text{FF LED}}$	O	27	FF LED control signal. L : LED ON H : LED OFF
$\overline{\text{PLAY LED}}$	O	28	PLAY LED control signal. L : LED ON H : LED OFF
$\overline{\text{REW LED}}$	O	29	REW LED control signal. L : LED ON H : LED OFF
		30	5MHz Oscillation.
		31	5MHz Oscillation.
$\overline{\text{RESET}}$	I	32	System reset input terminal.
$\overline{\text{SCK}}$	O	33	Communication line to a mode control microcomputer (IC001/SE-10board) inside the Core-deck. Full-duplex serial data of 24-byte can be transmitted by 5-bit data. (See Fig.3-1)
SO	O	34	
$\overline{\text{ENABLE}}$	I	35	
SI	I	36	
$\overline{\text{MODE CS}}$	O	37	
$\overline{\text{GENLOCK}}$	I	38	Sync control signal of core-deck. When it is "L", phase is locked to V SYNC input from external device, forcibly. Actuality, Pin 61 is "L" level and sync is locked with external device when the mode is playback or ×1 mode.
ACK	I	39	Burst existence signal. This signal is used for detecting the video signal existence. H : Blank L : Video signal exist
TC/$\overline{\text{REEL}}$	I	40	Selection signal to display the time code or reel counter on the 8-digit 7-segment LED. H : Time code L : Reel counter
VTRI/$\overline{\text{II}}$	I	41	Sircs category code selection signal input to pin 59. H : Receive VTR I L : Receive VTR II
$\overline{\text{TEST}}$	I	42	"L" in TEST mode.
$\overline{\text{PRINTER}}$	I	43	"L" in Printer. Not used.
PRGINC	I	44	Control signal to increment a chapter number, when the printer has been used. Not used.
——	——	45	Not used.
$\overline{\text{AUTO REPEAT}}$	I	46	Switching signal to AUTO REPEAT mode. AUTO REPEAT is carried out when the ACK at pin 39 is "L".
$\overline{\text{AUTO PB}}$	I	47	Not used.
$\overline{\text{TIMER PB}}$	I	48	Switching signal for automatic playback when the power is turned ON. Automatic playback is carried out when it is "L".
$\overline{\text{TIMER REC}}$	I	49	Switching signal for automatic recording when the power is turned ON. When it is set to "L", unit is set into the record mode by turning the power ON.
$\overline{\text{J/S LED}}$	O	50	Not used.
$\overline{\text{EJECT LED}}$	O	51	EJECT LED control signal. L : LED ON H : LED OFF

Signal name	I/O	PIN No.	Function
Vcc	O	26	UNSW5V.
$\overline{\text{FF LED}}$	O	27	FF LED control signal. L : LED ON H : LED OFF
$\overline{\text{PLAY LED}}$	O	28	PLAY LED control signal. L : LED ON H : LED OFF
$\overline{\text{REW LED}}$	O	29	REW LED control signal. L : LED ON H : LED OFF
		30	5MHz Oscillation.
		31	5MHz Oscillation.
$\overline{\text{RESET}}$	I	32	System reset input terminal.
$\overline{\text{SCK}}$	O	33	Communication line to a mode control microcomputer (IC001/SE-10board) inside the Core-deck. Full-duplex serial data of 24-byte can be transmitted by 5-bit data. (See Fig.3-1)
SO	O	34	
$\overline{\text{ENABLE}}$	I	35	
SI	I	36	
$\overline{\text{MODE CS}}$	O	37	
$\overline{\text{GENLOCK}}$	I	38	Sync control signal of core-deck. When it is "L", phase is locked to V SYNC input from external device, forcibly. Actuality, Pin 61 is "L" level and sync is locked with external device when the mode is playback or ×1 mode.
ACK	I	39	Burst existence signal. This signal is used for detecting the video signal existence. H : Blank L : Video signal exist
TC/$\overline{\text{REEL}}$	I	40	Selection signal to display the time code or reel counter on the 8-digit 7-segment LED. H : Time code L : Reel counter
VTRI/$\overline{\text{II}}$	I	41	Sircs category code selection signal input to pin 59. H : Receive VTR I L : Receive VTR II
$\overline{\text{TEST}}$	I	42	"L" in TEST mode.
$\overline{\text{PRINTER}}$	I	43	"L" in Printer. Not used.
PRGINC	I	44	Control signal to increment a chapter number, when the printer has been used. Not used.
——	——	45	Not used.
$\overline{\text{AUTO REPEAT}}$	I	46	Switching signal to AUTO REPEAT mode. AUTO REPEAT is carried out when the ACK at pin 39 is "L".
$\overline{\text{AUTO PB}}$	I	47	Not used.
$\overline{\text{TIMER PB}}$	I	48	Switching signal for automatic playback when the power is turned ON. Automatic playback is carried out when it is "L".
$\overline{\text{TIMER REC}}$	I	49	Switching signal for automatic recording when the power is turned ON. When it is set to "L", unit is set into the record mode by turning the power ON.
$\overline{\text{J/S LED}}$	O	50	Not used.
$\overline{\text{EJECT LED}}$	O	51	EJECT LED control signal. L : LED ON H : LED OFF

Signal name	I/O	PIN No.	Function
$\overline{\text{HB LED}}$	O	52	Hi8 LED control signal. L : LED ON H : LED OFF
$\overline{\text{REC LED}}$	O	53	REC LED control signal. L : LED ON H : LED OFF
KEY1	I	54	A/D port for KEY Detection. DUB, $+1/5$, $-1/5$
KEY2	I	55	A/D port for KEY Detection. POWER, REW, RESET
KEY3	I	56	A/D port for KEY Detection. EJECT, PLAY, PAUSE
KEY4	I	57	A/D port for KEY Detection. STOP, REC, FF
Vcc		58	UNSW5V。
SIRCS IN	I	59	SIRCS Signal input terminal.
HMON	O	60	Control signal for the hours meter. It goes to "L" during rotating the drum based on the data transmitted from the core-deck.
INT/$\overline{\text{EXT}}$	I	61	Switching signal for EXT/INT Sync. L : External sync mode
A MUTE	O	62	Audio muting control signal. Mute by "H".
$\overline{\text{POWER ON}}$	I	63	Power on detection signal. L : Power on
	O	64	Not used.

External Bus Timing chart

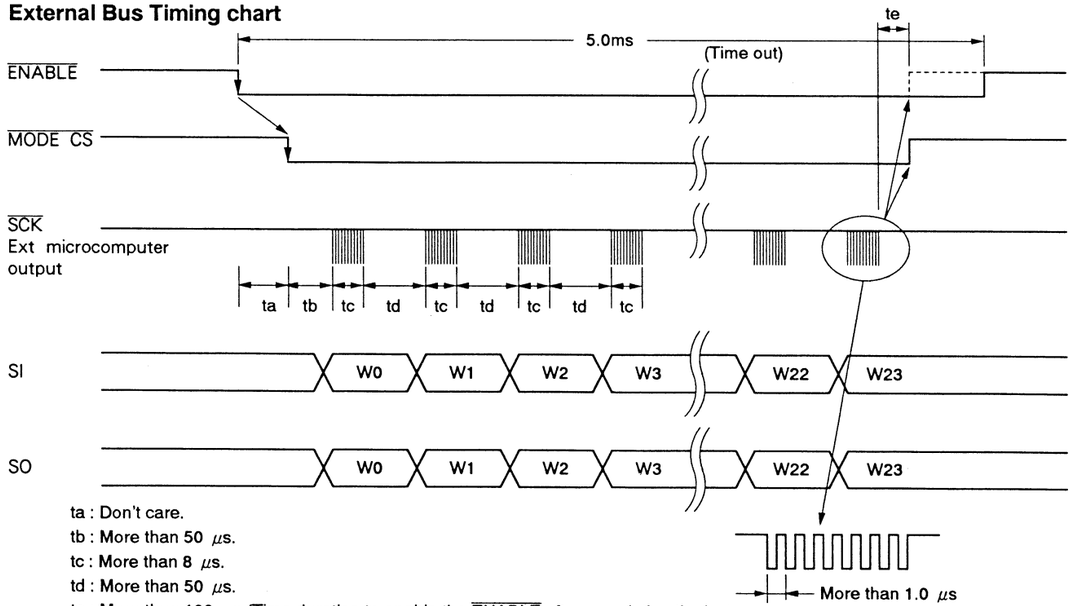

ta : Don't care.
tb : More than 50 μs.
tc : More than 8 μs.
td : More than 50 μs.
te : More than 100 μs (Time duration to enable the $\overline{\text{ENABLE}}$ after completing the last communication.)

Fig. 3-1

3-26. AFM/PCM AUDIO BLOCK DIAGRAM

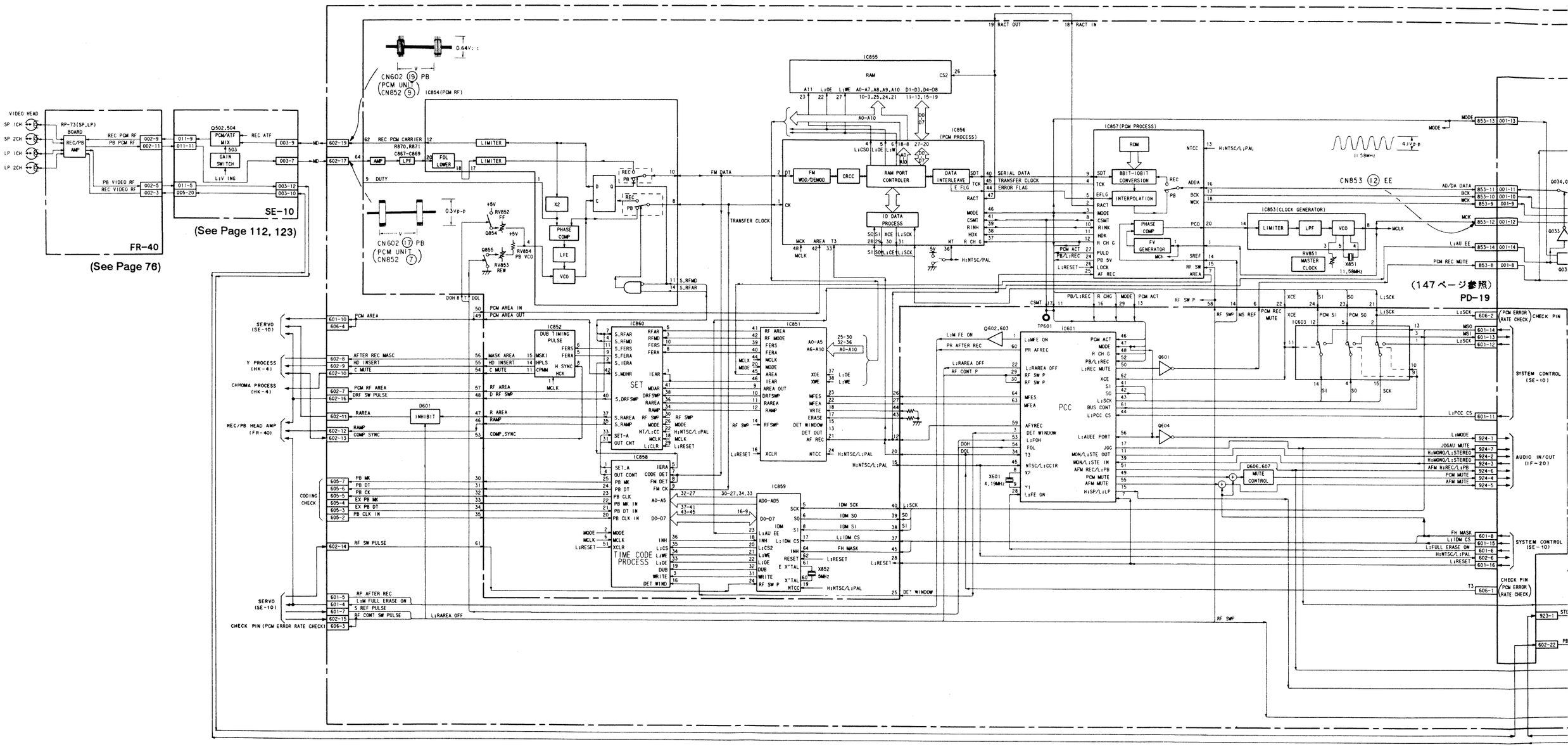

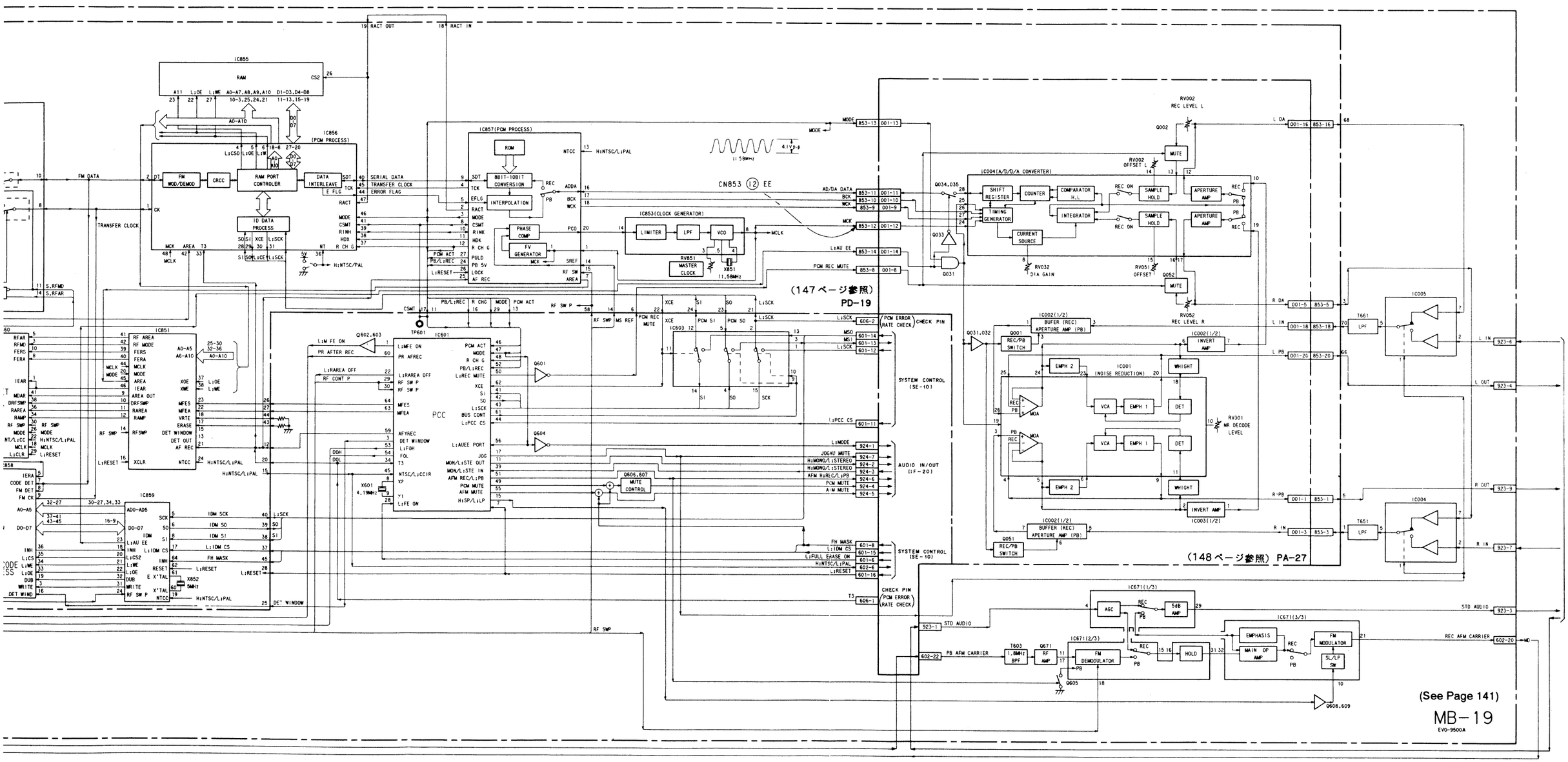
IC855
RAM
IC856
(PCM PROCESS)
IC857(PCM PROCESS)
IC853(CLOCK GENERATOR)
IC004(A/D/D/A CONVERTER)
IC851
IC859
IC601
IC603
IC002(1/2)
IC001
IC671(1/3)
IC671(2/3)
IC671(3/3)
IC005
IC004
FM MOD/DEMOD
CRCC
RAM PORT CONTROLER
DATA INTERLEAVE
ID DATA PROCESS
ROM
8BIT-10BIT CONVERSION
INTERPOLATION
PHASE COMP
FV GENERATOR
LIMITER
LPF
VCO
MASTER CLOCK
SHIFT REGISTER
TIMING GENERATOR
COUNTER
COMPARATOR H,L
INTEGRATOR
CURRENT SOURCE
SAMPLE HOLD
APERTURE AMP
MUTE
REC/PB SWITCH
APERTURE AMP (PB)
BUFER (REC)
INVERT AMP
EMPH 1
EMPH 2
WHIGHT
DET
VCA
NOISE REDUCTION
AGC
54dB AMP
HOLD
EMPHASIS
MAIN DP AMP
FM MODULATOR
SLOPE SW
FM DEMODULATOR
RF AMP
MUTE CONTROL
SYSTEM CONTROL (SE-10)
AUDIO IN/OUT (IF-20)
CHECK PIN (PCM ERROR RATE CHECK)
CN853 (12) EE
11.59MHz
4.1Vp-p
X851 11.58MHz
X852 5MHz
X601 4.19MHz
T603 7.8MHz BPF
RV002 REC LEVEL L
RV052 REC LEVEL R
RV002 OFFSET L
RV051 OFFSET R
RV032 D/A GAIN
RV301 NR DECODE LEVEL
(147ページ参照) PD-19
(148ページ参照) PA-27
(See Page 141) MB-19

3-27. AUDIO IN/OUT BLOCK DIAGRAM

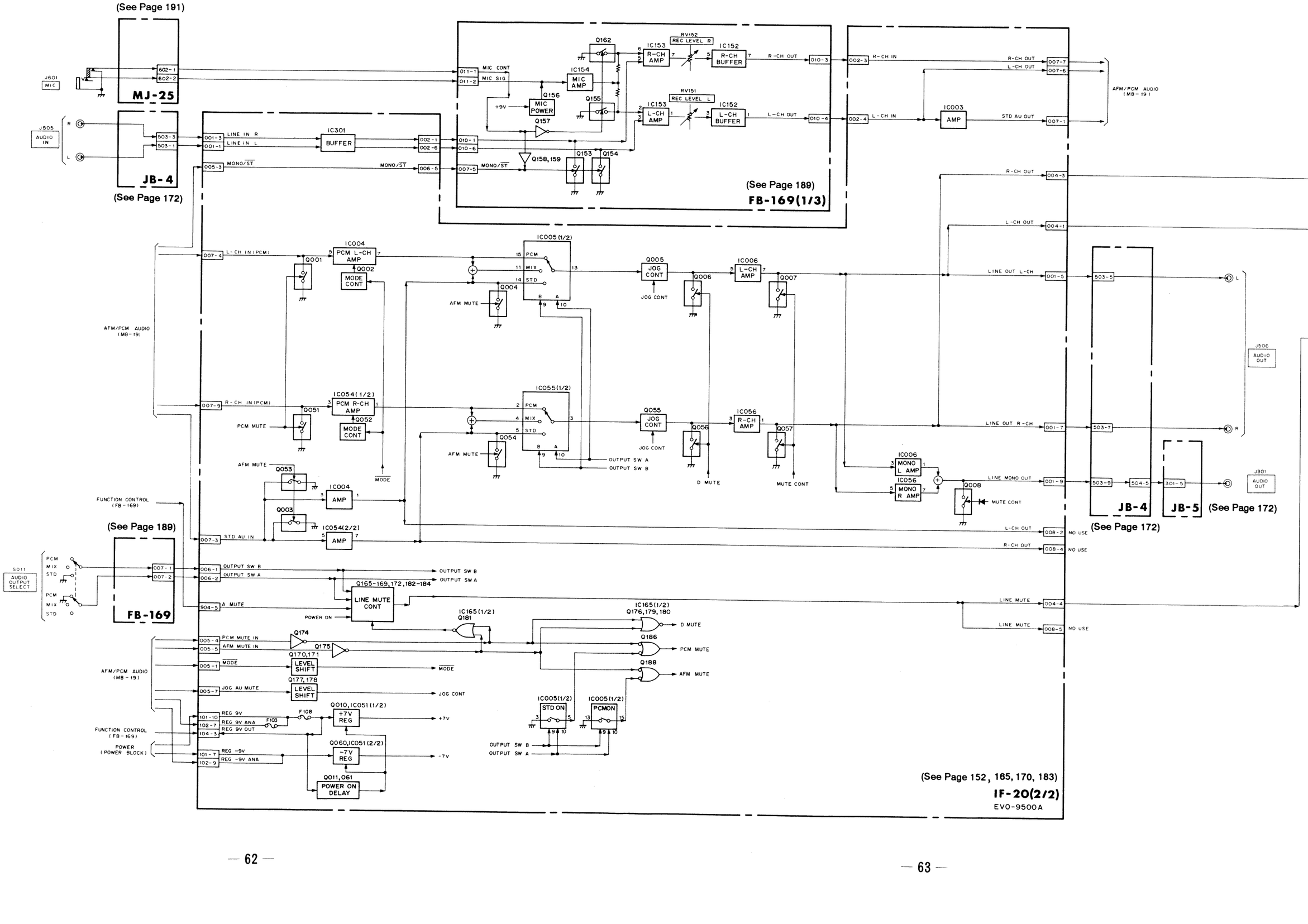

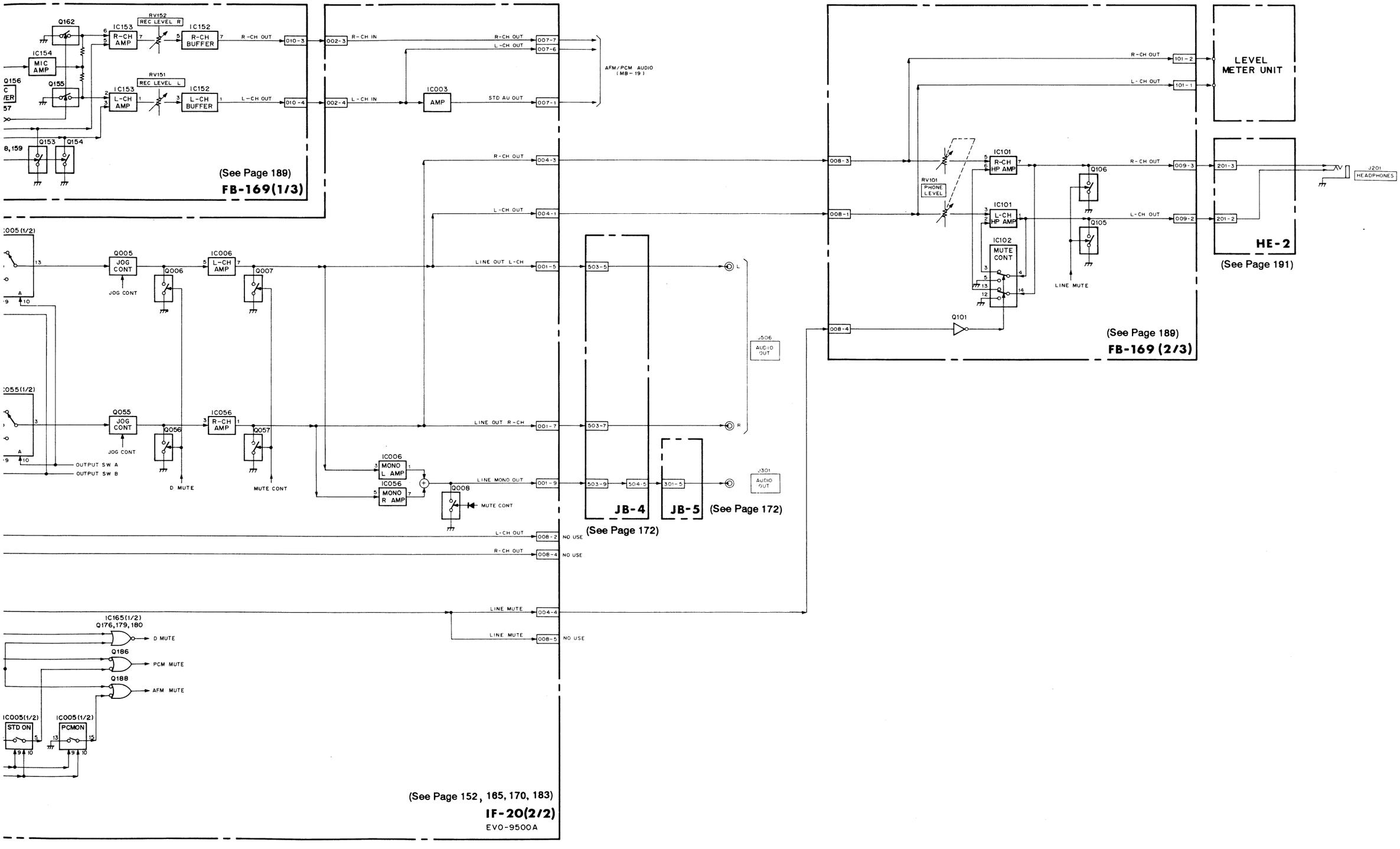
Q162
IC153
R-CH AMP
RV152
REC LEVEL R
IC152
R-CH BUFFER
R-CH OUT
010-3
002-3
R-CH IN
R-CH OUT
007-7
L-CH OUT
007-6
IC154
MIC AMP
Q156
Q155
IC153
L-CH AMP
RV151
REC LEVEL L
IC152
L-CH BUFFER
L-CH OUT
010-4
002-4
L-CH IN
IC003
AMP
STD AU OUT
007-1
AFM/PCM AUDIO (MB-19)
Q153
Q154
(See Page 189)
FB-169(1/3)
R-CH OUT
004-3
L-CH OUT
004-1
LINE OUT L-CH
001-5
503-5
J506
AUDIO OUT
IC005(1/2)
Q005
JOG CONT
Q006
IC006
L-CH AMP
Q007
JOG CONT
IC055(1/2)
Q055
JOG CONT
Q056
IC056
R-CH AMP
Q057
OUTPUT SW A
OUTPUT SW B
D MUTE
MUTE CONT
LINE OUT R-CH
001-7
503-7
R
IC006
MONO L AMP
IC056
MONO R AMP
LINE MONO OUT
001-9
503-9
504-5
301-5
Q008
MUTE CONT
J301
AUDIO OUT
JB-4
JB-5
(See Page 172)
L-CH OUT
008-2
NO USE
R-CH OUT
008-4
NO USE
LINE MUTE
004-4
LINE MUTE
008-5
NO USE
IC165(1/2)
Q176,179,180
D MUTE
Q186
PCM MUTE
Q188
AFM MUTE
IC005(1/2)
STD ON
IC005(1/2)
PCMON
(See Page 152, 165, 170, 183)
IF-20(2/2)
EVO-9500A
R-CH OUT
008-3
L-CH OUT
008-1
Q101
008-4
RV101
PHONE LEVEL
IC101
R-CH HP AMP
IC101
L-CH HP AMP
IC102
MUTE CONT
LINE MUTE
Q106
Q105
R-CH OUT
009-3
L-CH OUT
009-2
R-CH OUT
101-2
L-CH OUT
101-1
LEVEL METER UNIT
201-3
201-2
HE-2
(See Page 191)
J201
HEADPHONES
(See Page 189)
FB-169 (2/3)

3-28. POWER BLOCK DIAGRAM

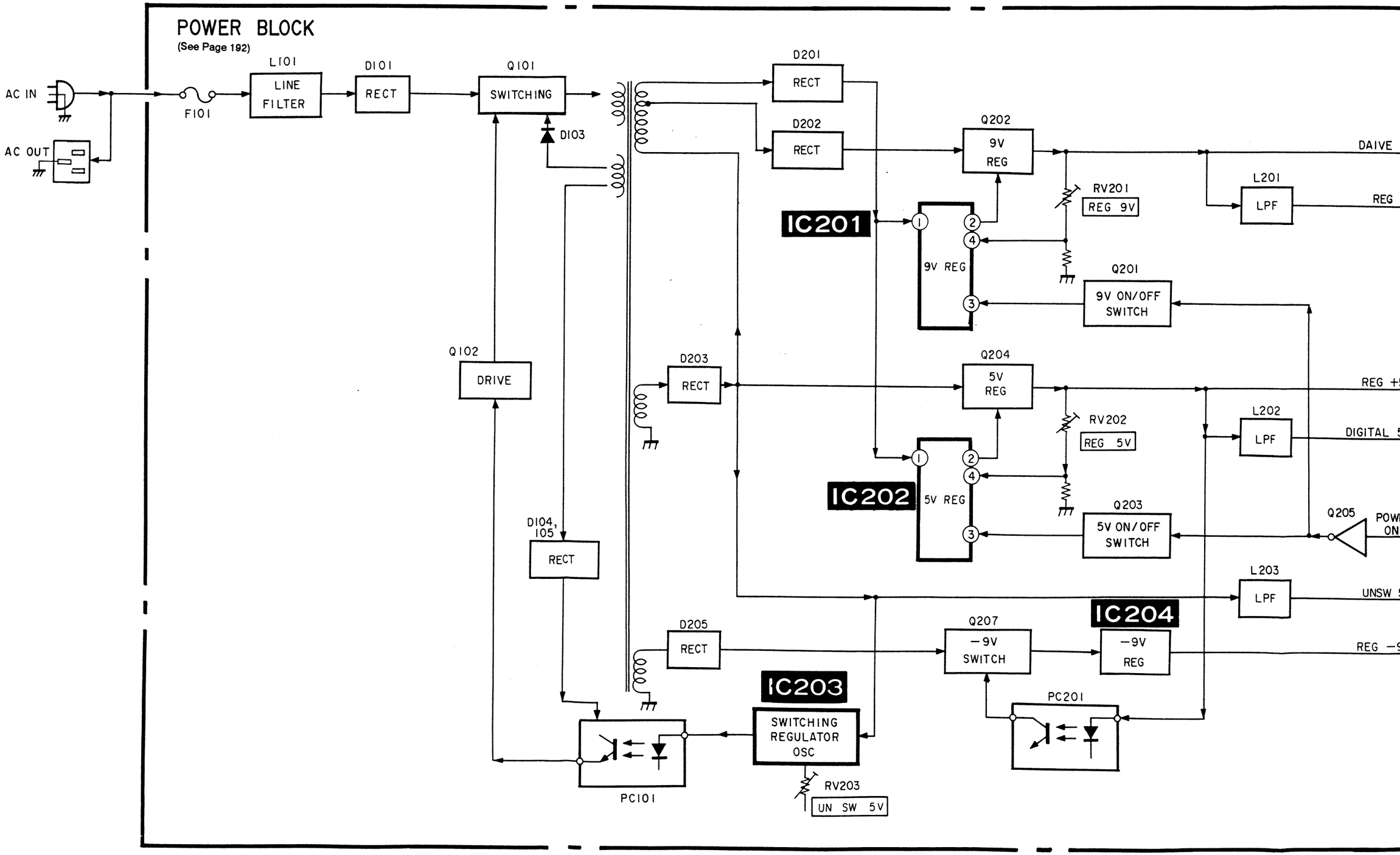

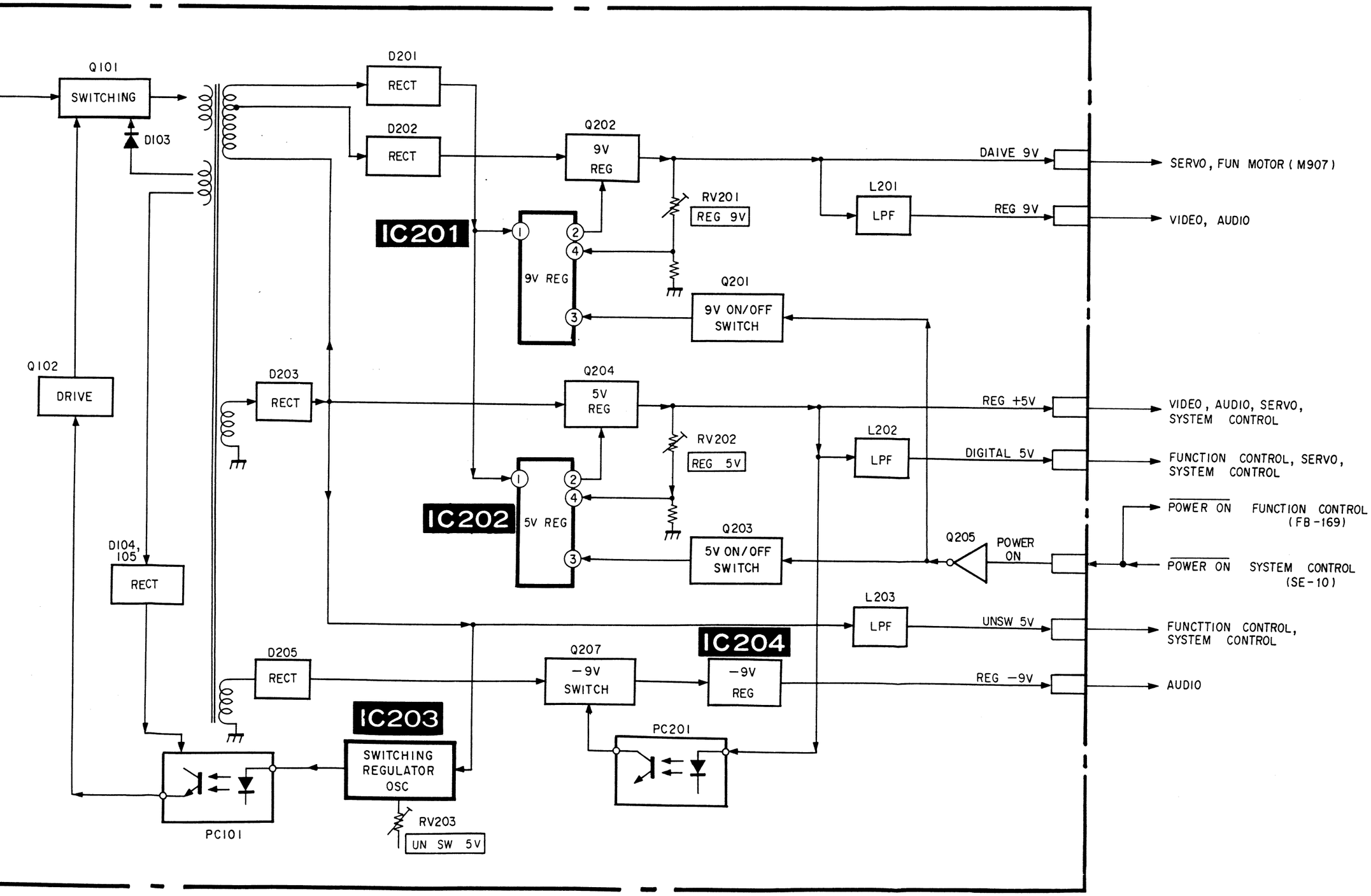
Q101
SWITCHING
D103
D201
RECT
D202
RECT
Q202
9V
REG
DAIVE 9V
SERVO, FUN MOTOR (M907)
RV201
REG 9V
L201
LPF
REG 9V
VIDEO, AUDIO
IC201
1
2
4
9V REG
3
Q201
9V ON/OFF
SWITCH
Q102
DRIVE
D203
RECT
Q204
5V
REG
REG +5V
VIDEO, AUDIO, SERVO,
SYSTEM CONTROL
RV202
REG 5V
L202
LPF
DIGITAL 5V
FUNCTION CONTROL, SERVO,
SYSTEM CONTROL
IC202
5V REG
POWER ON
FUNCTION CONTROL
(FB-169)
Q203
5V ON/OFF
SWITCH
Q205
POWER
ON
POWER ON
SYSTEM CONTROL
(SE-10)
D104,
105
RECT
L203
LPF
UNSW 5V
FUNCTTION CONTROL,
SYSTEM CONTROL
IC204
D205
RECT
Q207
−9V
SWITCH
−9V
REG
REG −9V
AUDIO
IC203
PC201
SWITCHING
REGULATOR
OSC
RV203
UN SW 5V
PC101

SECTION 4
PRINTED WIRING AND SCHEMATIC DIAGRAMS

4-1. FRAME SCHEMATIC DIAGRAM

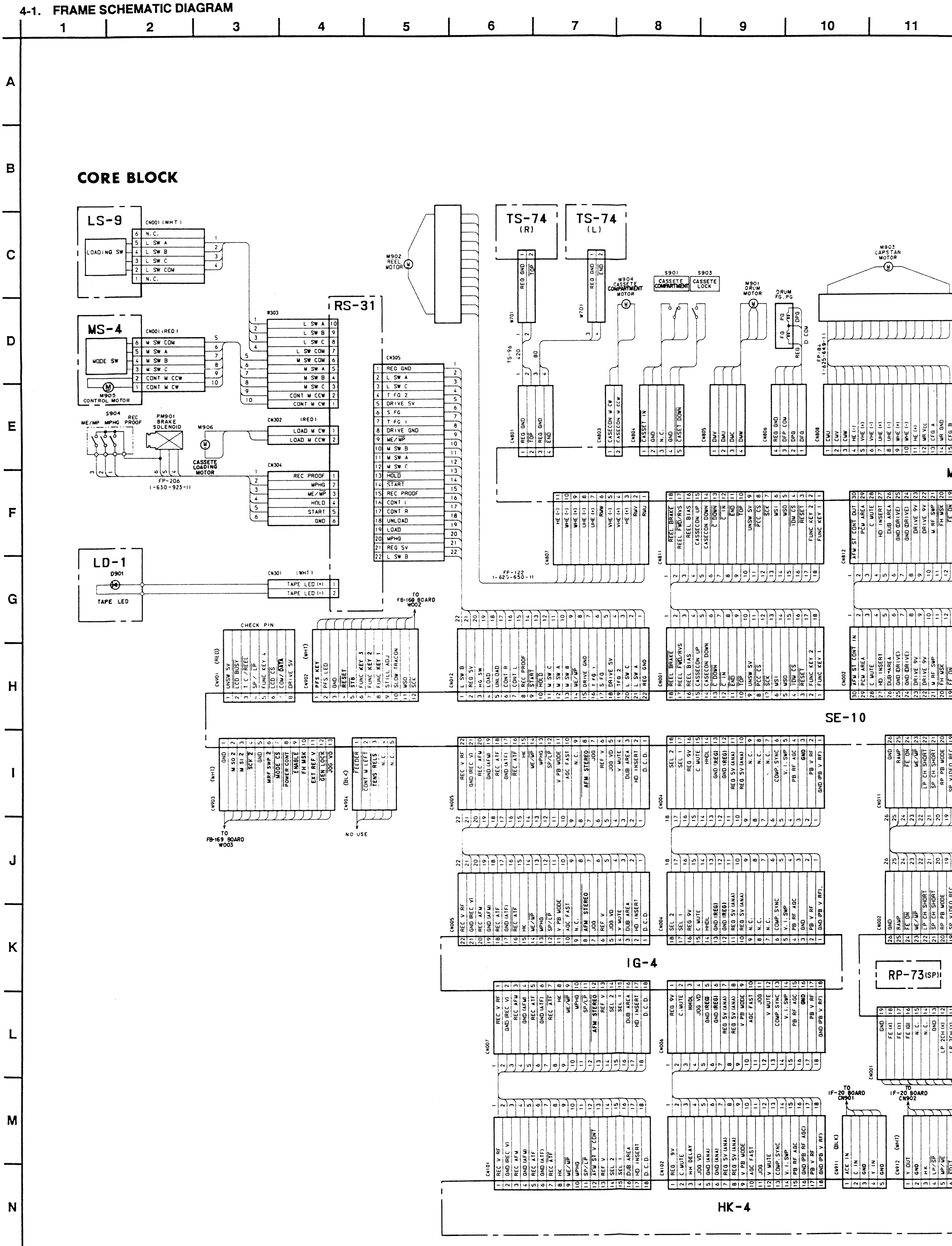

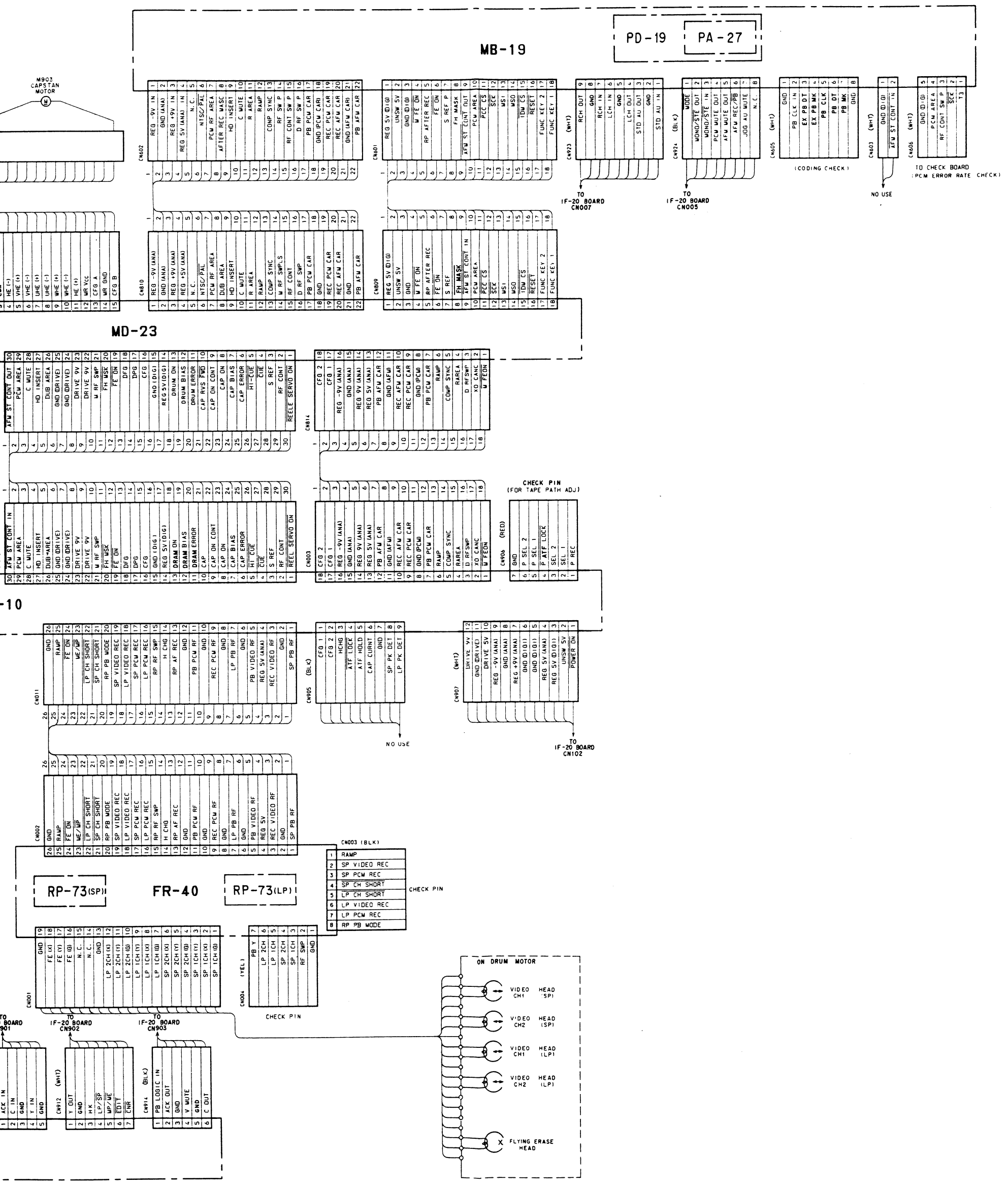
MB-19
PD-19
PA-27
M903 CAPSTAN MOTOR
CN602
CN601
CN923 (WHT)
CN924 (BLK)
CN605 (WHT)
CN603 (WHT)
CN606 (WHT)
TO IF-20 BOARD CN007
TO IF-20 BOARD CN005
(CODING CHECK)
NO USE
TO CHECK BOARD (PCM ERROR RATE CHECK)
CN810
CN809
MD-23
CN814
CN003
CN906 (RED)
CHECK PIN (FOR TAPE PATH ADJ)
CN011
CN905 (BLK)
CN907 (WHT)
NO USE
TO IF-20 BOARD CN102
CN002
CN003 (BLK)
RP-73(SP)
FR-40
RP-73(LP)
CHECK PIN
CN001
CN004 (YEL)
CHECK PIN
TO IF-20 BOARD CN901
TO IF-20 BOARD CN902
TO IF-20 BOARD CN903
CN912 (WHT)
CN914 (BLK)
ON DRUM MOTOR
VIDEO CH1 HEAD (SP)
VIDEO CH2 HEAD (SP)
VIDEO CH1 HEAD (LP)
VIDEO CH2 HEAD (LP)
FLYING ERASE HEAD

FRAME FRAME

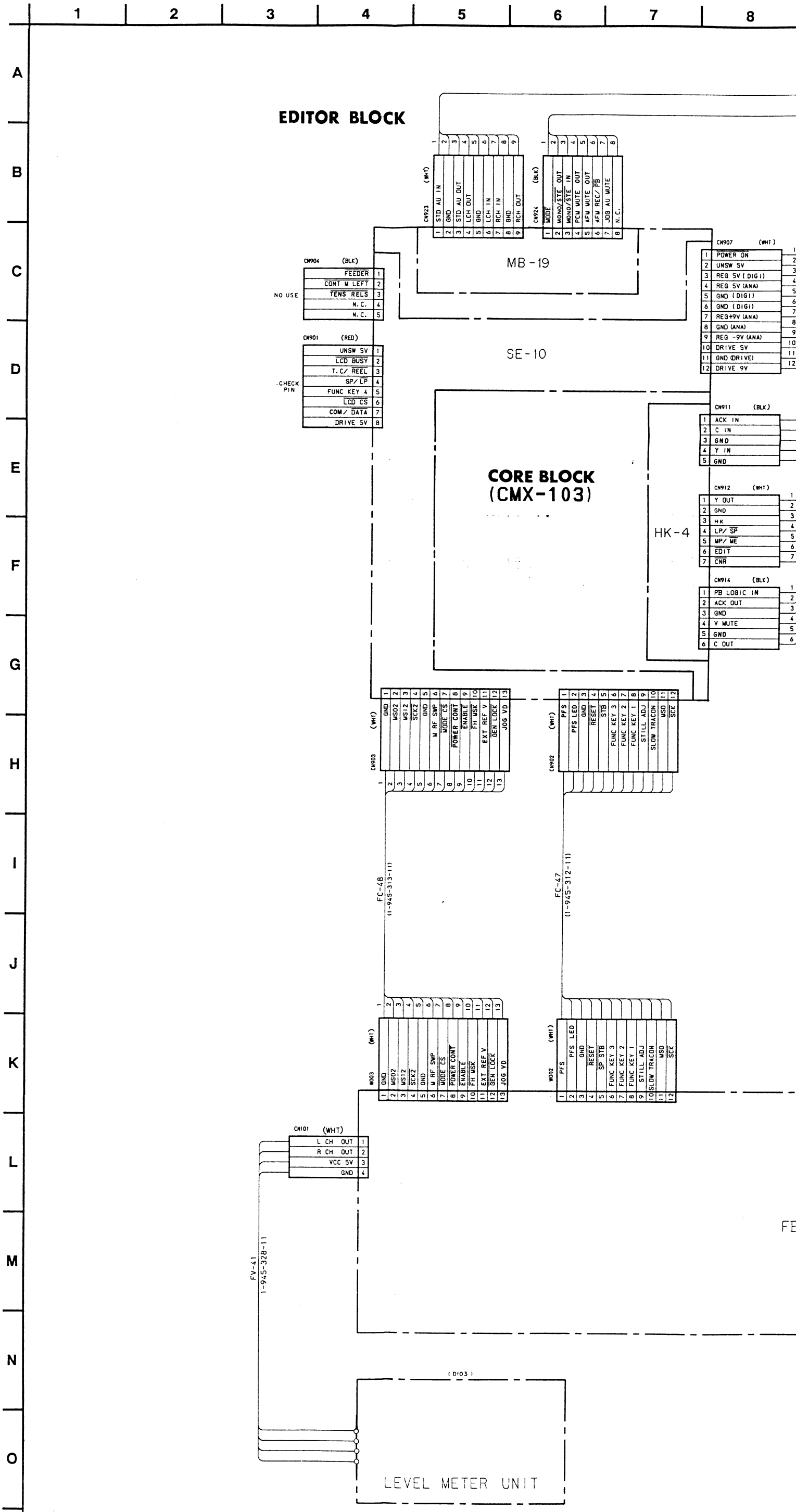
EDITOR BLOCK
CN923 (WHT)
1 STD AU IN
2 GND
3 STD AU OUT
4 LCH OUT
5 GND
6 LCH IN
7 RCH IN
8 GND
9 RCH OUT
CN924 (BLK)
1 MODE
2 MONO/STE OUT
3 MONO/STE IN
4 PCM MUTE OUT
5 AFW MUTE OUT
6 AFW REC/PB
7 JOG AU MUTE
8 N.C.
MB-19
CN904 (BLK)
FEEDER 1
CONT M LEFT 2
TENS RELS 3
N.C. 4
N.C. 5
NO USE
CN901 (RED)
UNSW 5V 1
LCD BUSY 2
T.C/REEL 3
SP/LP 4
FUNC KEY 4 5
LCD CS 6
COM/DATA 7
DRIVE 5V 8
CHECK PIN
SE-10
CN907 (WHT)
1 POWER ON
2 UNSW 5V
3 REG 5V (DIGI)
4 REG 5V (ANA)
5 GND (DIGI)
6 GND (DIGI)
7 REG+9V (ANA)
8 GND (ANA)
9 REG -9V (ANA)
10 DRIVE 5V
11 GND (DRIVE)
12 DRIVE 9V
CN911 (BLK)
1 ACK IN
2 C IN
3 GND
4 Y IN
5 GND
CORE BLOCK
(CMX-103)
HK-4
CN912 (WHT)
1 Y OUT
2 GND
3 HK
4 LP/SP
5 WP/WE
6 EDIT
7 CNR
CN914 (BLK)
1 PB LOGIC IN
2 ACK OUT
3 GND
4 V MUTE
5 GND
6 C OUT
CN903 (WHT)
1 GND
2 WSO2
3 WS12
4 SCK2
5 GND
6 W RF SWP
7 MODE CS
8 POWER CONT
9 ENABLE
10 FH WSK
11 EXT REF V
12 GEN LOCK
13 JOG VD
FC-48
(1-945-313-11)
CN902 (WHT)
1 PFS
2 PFS LED
3 GND
4 RESET
5 STB
6 FUNC KEY 3
7 FUNC KEY 2
8 FUNC KEY 1
9 STILL ADJ
10 SLOW TRACON
11 MSD
12 SCK
FC-47
(1-945-312-11)
W003 (WHT)
1 GND
2 WSO2
3 WS12
4 SCK2
5 GND
6 W RF SWP
7 MODE CS
8 POWER CONT
9 ENABLE
10 FH WSK
11 EXT REF V
12 GEN LOCK
13 JOG VD
W002 (WHT)
1 PFS
2 PFS LED
3 GND
4 RESET
5 STB
6 FUNC KEY 3
7 FUNC KEY 2
8 FUNC KEY 1
9 STILL ADJ
10 SLOW TRACON
11 MSD
12 SCK
CN101 (WHT)
L CH OUT 1
R CH OUT 2
VCC 5V 3
GND 4
FV-41
1-945-328-11
(D103)
LEVEL METER UNIT
FE

IM-10 1-945-335-11

IM-12 1-945-326-11

CN005 (BLK)
1	MODE
2	MONO STE IN
3	MONO STE OUT
4	PCM MUTE IN
5	AFM MUTE IN
6	AFM REC/ PB
7	JOG AU MUTE
8	N.C.

CN007 (BLK)
1	STD AU IN
2	GND
3	STD AU OUT
4	LCH OUT
5	GND
6	LCH IN
7	RCH IN
8	GND
9	RCH OUT

NO USE

CN008
1	-Vcc 9V OUT
2	Lch OUT
3	GND
4	Rch OUT
5	LINE MUTE
6	+Vcc 7V OUT

CN907 (WHT) — CP-27 1-945-334-11 — CN102 (WHT)
1	POWER ON	1	POWER ON
2	UNSW 5V	2	UNSW 5V
3	REG 5V (DIGI)	3	REG 5V(DIGI)
4	REG 5V (ANA)	4	REG 5V (ANA)
5	GND (DIGI)	5	GND (DIGI)
6	GND (DIGI)	6	GND (DIGI)
7	REG+9V (ANA)	7	REG+9V (ANA)
8	GND (ANA)	8	GND (ANA)
9	REG -9V (ANA)	9	REG -9V (ANA)
10	DRIVE 5V	10	DRIVE 5V
11	GND (DRIVE)	11	GND (DRIVE)
12	DRIVE 9V	12	DRIVE 9V

CN911 (BLK) — IH-5 1-945-323-11 — CN901 (BLK)
1	ACK IN	1	ACK IN
2	C IN	2	C IN
3	GND	3	GND
4	Y IN	4	Y IN
5	GND	5	GND

CN912 (WHT) — IH-6 1-945-324-11 — CN902 (WHT)
1	Y OUT	1	Y OUT
2	GND	2	GND
3	HK	3	HK
4	LP/ $\overline{SP}$	4	LP/ $\overline{SP}$
5	WP/ $\overline{WE}$	5	WP/ $\overline{WE}$
6	$\overline{EDIT}$	6	$\overline{EDIT}$
7	$\overline{CNR}$	7	$\overline{CNR}$

CN914 (BLK) — IH-7 1-945-325-11 — CN903 (BLK)
1	PB LOGIC IN	1	PB LOGIC IN
2	ACK OUT	2	ACK OUT
3	GND	3	GND
4	V MUTE	4	V MUTE
5	GND	5	C GND
6	C OUT	6	C OUT

CN002 (RED) — IR-3 1-945-327-11 — W010 (WHT)
1	R CH IN	1	R CH IN
2	GND	2	GND
3	R CH OUT	3	R CH OUT
4	L CH OUT	4	L CH OUT
5	GND	5	GND
6	L CH IN	6	L CH IN

CN006 (YEL) — FA-45 1-945-317-11 — W007 (WHT)
1	OUT SWB	1	OUT SWB
2	OUT SWA	2	OUT SWA
3	E.E.CONT	3	E.E.CONT
4	AGC	4	AGC
5	MONO/ $\overline{ST}$	5	MONO/ $\overline{ST}$
6	$\overline{POWER\ ON}$	6	$\overline{POWER\ ON}$

CN104 (WHT) — FP-79 1-945-311-11 — W001 (WHT)
1	REG -9V	1	REG -9V
2	GND	2	GND
3	REG +9V	3	REG +9V
4	REG 5V	4	REG 5V
5	UNSW 5V	5	UNSW 5V
6	GND	6	GND
7	GND	7	GND

CN004 (RED) — FA-46 1-945-318-11 — W008 (RED)
1	L CH IN	1	L CH IN
2	GND	2	GND
3	R CH IN	3	R CH IN
4	MUTE	4	MUTE
5	N.C	5	N.C

CN904 (WHT) — FV-38 1-945-314-11 — W004 (WHT)
1	EXT REF V	1	EXT REF V
2	ACK	2	ACK
3	H.M.ON	3	H.M.ON
4	S/LINE	4	S/LINE
5	A MUTE	5	A MUTE

CN001 (WHT) — AI-20 1-945-321-11 — WS03 (WHT)
1	LINE IN (Lch)	1	LINE IN (Lch)
2	GND (Lch)	2	GND (Lch)
3	LINE IN (Rch)	3	LINE IN (Rch)
4	GND (Rch)	4	GND (Rch)
5	LINE OUT (Lch)	5	LINE OUT (Lch)
6	GND (Lch)	6	GND (Lch)
7	LINE OUT (Rch)	7	LINE OUT (Rch)
8	GND (Rch)	8	GND (Rch)
9	LINE MONO OUT	9	LINE MONO OUT
10	GND (EARPHONE)	10	GND (EARPHONE)

CN906 (WHT) — VI-27 1-945-320-11 — WS01 (WHT)
1	GND	1	GND
2	V IN	2	V IN
3	GND	3	GND
4	V OUT 1	4	V OUT 1
5	REG 5V	5	REG 5V
6	GND	6	GND
7	V OUT 2	7	V OUT 2

CN103 (WHT)
1	FAN (+)
2	N.C.
3	FAN (-)

WS04 (WHT) — WO-2 1-945-322-11 — CN301 (WHT)
1	V M2	1	V M2
2	GND	2	GND
3	REG 5V	3	REG 5V
4	GND	4	GND
5	A M2	5	A M2

CN101 (WHT)
1	POWER ON
2	UNSW 5V
3	GND (UNSW)
4	REG 5V (DIG)
5	REG 5V
6	GND (5V)
7	REG -9V
8	GND (-9V)
9	GND (9V)
10	REG 9V
11	GND
12	DRIVE 9V

CN911 (WHT)
2	GND
1	$\overline{EDIT}$

CN905 (WHT)
1	Y OUT
2	GND
3	C OUT
4	GND
5	Y IN
6	GND
7	C IN
8	GND

VI-30 1-945-329-11

MT-41 1-945-333-11

	POWER ON
	UNSW 5V
	GND (UNSW)
	REG 5V (DIG)
	REG 5V
	GND (5V)
	REG -9V
	GND (-9V)
	GND (9V)
	REG 9V
	GND
	DRIVE 9V

CN403 (WHT)
	$\overline{EDIT}$
	GND

CN402 (WHT)
	Y OUT
	GND
	C OUT
	GND
	Y IN
	GND
	C IN
	GND

W005 (WHT) — FR-13 1-945-315-11
1	SYNC INT/$\overline{EXT}$
2	GND
3	STILL ADJ
4	UNSW 5V
5	PRG INC

W009 (WHT) — FH-10 1-945-319-11 — CN201 (WHT)
1	GND		GND
2	L CH OUT		L CH
3	R CH OUT		R CH

W011 (RED) — MI-27 1-945-330-11 — CN601 (RED)
1	MIC CONT		MIC CONT
2	MIC SIG		MIC SIG
3	GND		GND

W006 (WHT) — FR-14 1-945-316-11 — CN201 (WHT)
1	SELECT	1	SELECT
2	GND	2	GND
3	CONT P	3	CONT P
4	GND	4	GND

CONTROL P (IN / OUT)

CONTROL TERMINAL BOARD UNIT (CONTROL P)

IF-20

FB-169

TC-20

K-4

P

TOR BLOCK

IM-10 1-945-335-11

IM-12 1-945-326-11

CN923 (WHT): 1 STD AU IN, 2 GND, 3 STD AU OUT, 4 LCH OUT, 5 GND, 6 LCH IN, 7 RCH IN, 8 GND, 9 RCH OUT

CN924 (BLK): 1 MODE, 2 MONO/STE OUT, 3 MONO/STE IN, 4 PCM MUTE OUT, 5 AFM MUTE OUT, 6 AFM REC/PB, 7 JOG AU MUTE, 8 N.C.

MB-19

CN904 (BLK): FEEDER 1, CONT M LEFT 2, TENS RELS 3, N.C. 4, N.C. 5

CN901 (RED): UNSW 5V 1, LCD BUSY 2, T.C/REEL 3, SP/LP 4, FUNC KEY 4 5, LCD CS 6, COM/DATA 7, DRIVE 5V 8

SE-10

CN907 (WHT): 1 POWER ON, 2 UNSW 5V, 3 REG 5V (DIGI), 4 REG 5V (ANA), 5 GND (DIGI), 6 GND (DIGI), 7 REG+9V (ANA), 8 GND (ANA), 9 REG -9V (ANA), 10 DRIVE 5V, 11 GND (DRIVE), 12 DRIVE 9V

CP-27 1-945-334-11

CN902 (WHT): 1 POWER ON, 2 UNSW 5V, 3 REG 5V(DIGI), 4 REG 5V (ANA), 5 GND (DIGI), 6 GND (DIGI), 7 REG+9V (ANA), 8 GND (ANA), 9 REG -9V (ANA), 10 DRIVE 5V, 11 GND (DRIVE), 12 DRIVE 9V

CN911 (BLK): 1 ACK IN, 2 C IN, 3 GND, 4 Y IN, 5 GND

IH-5 1-945-323-11

CN901 (BLK): ACK IN 1, C IN 2, GND 3, Y IN 4, GND 5

CORE BLOCK (CMX-103)

CN912 (WHT): 1 Y OUT, 2 GND, 3 HK, 4 LP/SP, 5 MP/ME, 6 EDIT, 7 CNR

IH-6 1-945-324-11

CN902 (WHT): 1 Y OUT, 2 GND, 3 HK, 4 LP/SP, 5 MP/ME, 6 EDIT, 7 CNR

HK-4

IF-20

CN914 (BLK): 1 PB LOGIC IN, 2 ACK OUT, 3 GND, 4 V MUTE, 5 GND, 6 C OUT

IH-7 1-945-325-11

CN903 (BLK): 1 PB LOGIC IN, 2 ACK OUT, 3 GND, 4 V MUTE, 5 C GND, 6 C OUT

CN002 (RED): 1 R CH IN, 2 GND, 3 R CH OUT, 4 L CH OUT, 5 GND, 6 L CH IN

CN005 (BLK): 1 MODE, 2 MONO STE IN, 3 MONO STE OUT, 4 PCM MUTE IN, 5 AFM MUTE IN, 6 AFM REC/PB, 7 JOG AU MUTE, 8 N.C.

CN007 (BLK): 1 STD AU IN, 2 GND, 3 STD AU OUT, 4 LCH OUT, 5 GND, 6 LCH IN, 7 RCH IN, 8 GND, 9 RCH OUT

CN008: NO USE; 1 -Vcc 9V OUT, 2 Lch OUT, 3 GND, 4 Rch OUT, 5 LINE MUTE, 6 +Vcc 7V OUT

CN001: 1 LINE IN, 2 GND, 3 LINE IN, 4 GND, 5 LINE OUT, 6 GND, 7 LINE OUT, 8 GND, 9 LINE MONO, 10 GND (EARPH

CN906: 1 GND, 2 V IN, 3 GND, 4 V OUT 1, 5 REG 5V, 6 GND, 7 V OUT 2

CN103: 1 FAN (+), 2 N.C., 3 FAN (-)

CN101: 1 POWER ON, 2 UNSW 5V, 3 GND (UNSW), 4 REG 5V (DIG), 5 REG 5V, 6 GND (5V), 7 REG -9V, 8 GND (-9V), 9 GND (9V), 10 REG 9V, 11 GND, 12 DRIVE 9V

CN911 (WH): 2 GND, 1 EDIT

CN905 (WHT): 1 Y OUT, 2 GND, 3 C OUT, 4 GND, 5 Y IN, 6 GND, 7 C IN, 8 GND

CN903 (WHT): 1 GND, 2 MSO2, 3 MS12, 4 SCK2, 5 GND, 6 M RF SWP, 7 MODE CS, 8 POWER CONT, 9 ENABLE, 10 FH MSK, 11 EXT REF V, 12 GEN LOCK, 13 JOG VD

CN902 (WHT): 1 PFS, 2 PFS LED, 3 GND, 4 RESET, 5 STB, 6 FUNC KEY 3, 7 FUNC KEY 2, 8 FUNC KEY 1, 9 STILL ADJ, 10 SLOW TRACON, 11 MSO, 12 SCK

FC-48 (1-945-313-11)

FC-47 (1-945-312-11)

IR-3 1-945-327-11

CN006 (YEL): 1 OUT SWB, 2 OUT SWA, 3 E.E.CONT, 4 AGC, 5 MONO/ST, 6 POWER ON

FA-45 1-945-317-11

CN104 (WHT): 1 REG -9V, 2 GND, 3 REG +9V, 4 REG 5V, 5 UNSW 5V, 6 GND, 7 GND

FP-79 1-945-311-11

CN004 (RED): 1 L CH IN, 2 GND, 3 R CH IN, 4 MUTE, 5 N.C

FA-46 1-945-318-11

CN904 (WHT): 1 EXT REF V, 2 ACK, 3 H.M.ON, 4 S/LINE, 4 A MUTE

FV-38 1-945-314-11

W003 (WHT): 1 GND, 2 MSO2, 3 MS12, 4 SCK2, 5 GND, 6 M RF SWP, 7 MODE CS, 8 POWER CONT, 9 ENABLE, 10 FH MSK, 11 EXT REF V, 12 GEN LOCK, 13 JOG VD

W002 (WHT): 1 PFS, 2 PFS LED, 3 GND, 4 RESET, 5 SP STB, 6 FUNC KEY 3, 7 FUNC KEY 2, 8 FUNC KEY 1, 9 STILL ADJ, 10 SLOW TRACON, 11 MSO, 12 SCK

W010 (WHT): 1 R CH IN, 2 GND, 3 R CH OUT, 4 L CH OUT, 5 GND, 6 L CH IN

W007 (WHT): 1 OUT SWB, 2 OUT SWA, 3 E.E.CONT, 4 AGC, 5 MONO/ST, 6 POWER ON

W001 (WHT): 1 REG -9V, 2 GND, 3 REG +9V, 4 REG 5V, 5 UNSW 5V, 6 GND, 7 GND

W008 (RED): 1 L CH IN, 2 GND, 3 R CH IN, 4 MUTE, 5 N.C

W004 (WHT): 1 EXT REF V, 2 ACK, 3 H.M.ON, 4 S/LINE, 5 A MUTE

W005: 1 SYNC INT, 2 GND, 3 STILL ADJ, 4 UNSW 5V, 5 PRG INC

W009: 1 GND, 2 L CH OUT, 3 R CH OUT

W011: 1 MIC CONT, 2 MIC SIG, 3 GND

W006: 1 SELECT, 2 GND, 3 CONT P, 4 GND

(WHT): L CH OUT 1, R CH OUT 2, VCC 5V 3, GND 4

FB-169

TC-20

(D103)

LEVEL METER UNIT

CONTROL P: IN, OUT

CONTROL TERMINAL BOARD UNIT (CONTROL P)

CN201: 1 SELECT, 2 GND, 3 CONT P, 4 GND

15 | 16 | 17 | 18 | 19 | 20 | 21 | 22 | 23 | 24 | 25 | 26

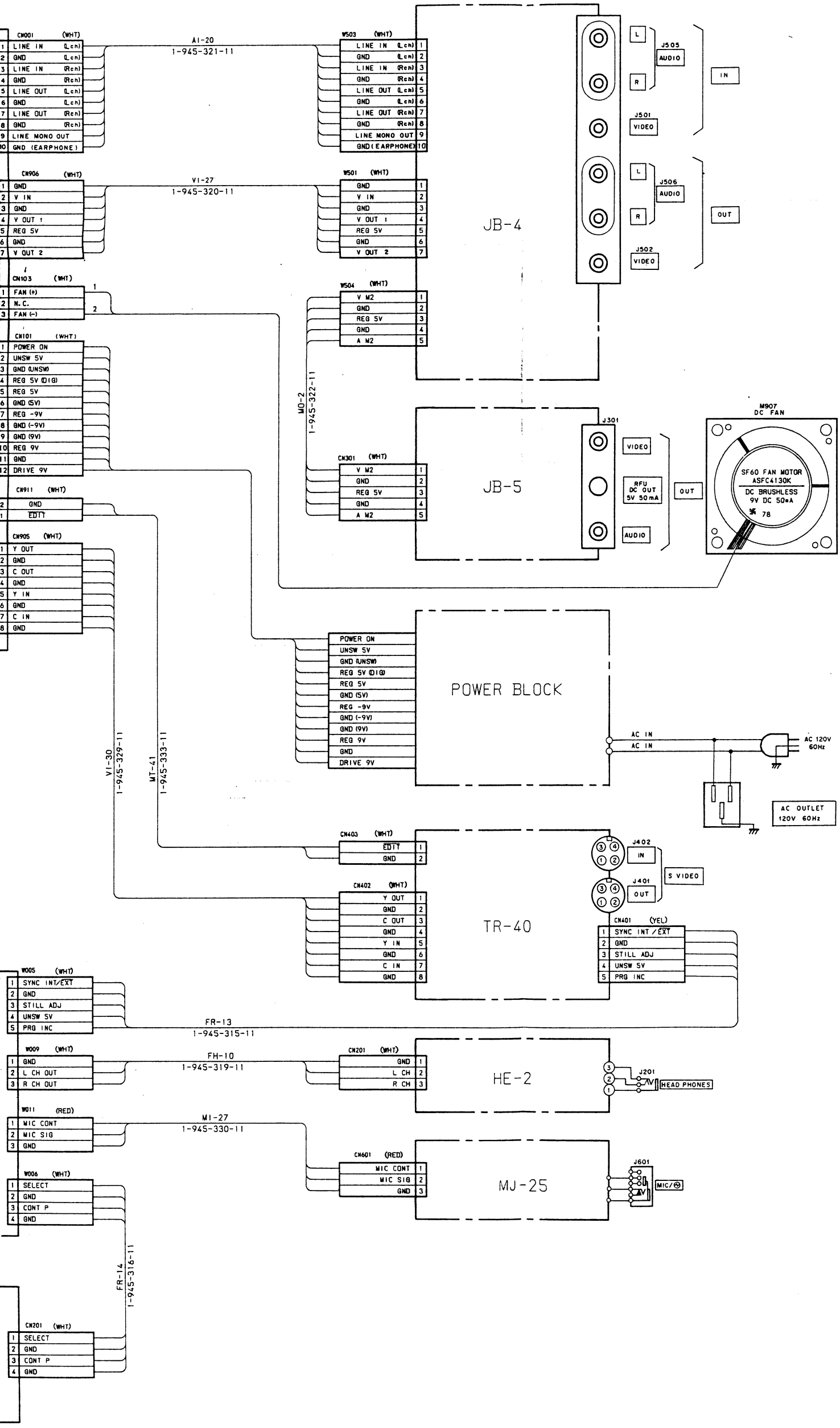

4-2. PRINTED WIRING BOARDS AND SCHEMATIC DIAGRAMS

THIS NOTE IS COMMON FOR PRINTED WIRING BOARDS AND SCHEMATIC DIAGRAMS.
(In addition to this , the necessary note is printed in each block.)

- **For printed wiring boards.**
- ○— : indicated a lead wire mounted on the component side.
- —— : indicated a lead wire mounted on the conductor side.
- ● : Through hole.
- ■ : Parts mounted on the conductor side.
- ▬ : Pattern from the side which enables seeing.
- ▬ : Pattern of the rear side.
- Circled numbers refer to waveforms.

Caution:	
Pattern face side: (Conductor Side)	Parts on the pattern face side seen from the pattern face are indicated.
Parts face side: (Component side)	Parts on the parts face side seen from the pattern face are indicated.

- **For schematic diagrams.**
- Caution when replacing chip parts.
  New parts must be attached after removal of chip.
  Be careful not to heat the minuts side of tantalum capacitor, because it is damaged by the heat.
- All resistors are in ohms, 1/4W unless otherwise noted.
  Chip resistor are 1/10W unless otherwise noted.
  kΩ : 1000Ω , MΩ : 1000kΩ .
- All capacitors are in μF unless otherwise noted. pF: μμF.
  50V or less are not indicated except for electrolytics and tantalums.
- All variable and adjustable resistors have characteristic curve B, unless otherwise noted.
- ▭ : nonflammable resistor.
- ▭ : fusible resistor.
- ▭ : panel designation.
- △ : internal component.
- ▭ : adjustment for repeair.
- ——— : B+ Line.
- - - - : B– Line.
- ▱ : IN/OUT direction of (+, –) B LINE.
- Circled numbers refer to waveforms.
- Voltages are dc between ground and measurement points.
- Readings are taken with a color-bar signal input.
- Readings are taken with a digital multimeter (DC10MΩ).
- Voltages are taken with a VOM (Input impedance 10MΩ).
- Voltage variations may be noted due to normal production tolerances.

Note:	**Note:**
The components identified by mark ⚠ or dotted line with mark ⚠ are critical for safty. Replace only with part number specified.	Les composants identifiés par une marque ⚠ sont critiques pour la sécurité. Ne les remplacer que par une piéce portant le numéro spécifié.

When indicating parts by reference number, please include the board name.

FR-40 BOARD

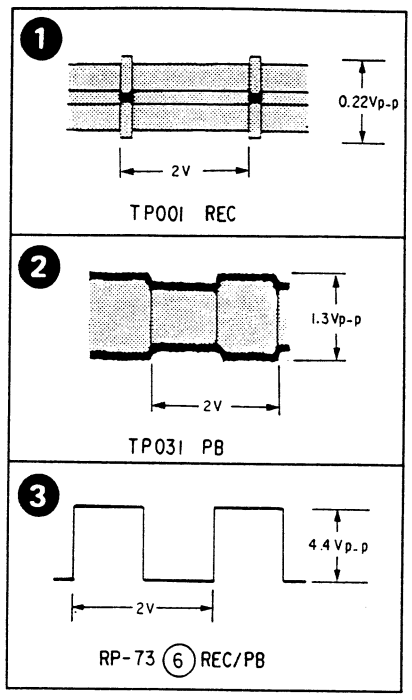

FR-40 (VIDEO HEAD AMP), RP-73 (SP) (HEAD AMP), RF

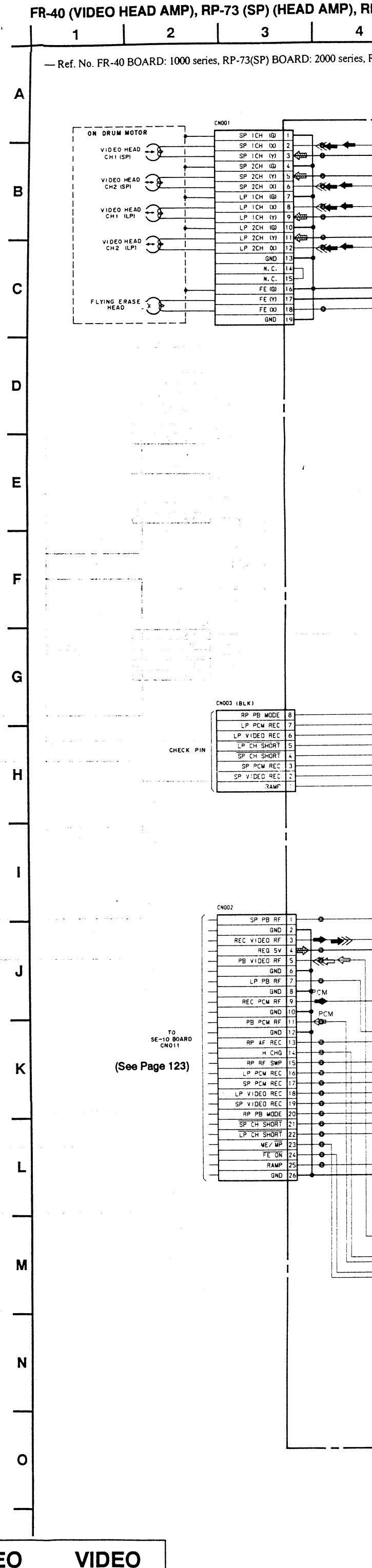

- **SIGNAL PATH**

	VIDEO SIGNAL			AUDIO SIGNAL
	CHROMA	Y	Y/CHROMA/DATA	
REC			➡	➡
PB			⇨	⇨

VIDEO VIDEO

4 5 6 7 8 9 10 11 12 13 14 15

) series, RP-73(LP) BOARD: 3000 series —

Q003 LP MUTE

Q008,009 RAMP GENERATOR

Q005 SP SWITC

Q006 LP SWITCH

Q004 LP MUTE

TP002 LP 2CH

HIC002

HIC001

CH2 BIAS
RP 5V
CH2 CHECK
CH2 (Y)
CH2 (X)
GND
GND
CH1 (X)
CH1 (Y)
CH1 CHECK
REG 5V
CH1 BIAS

Q003 DUMPING

Q002 DUMPING

IC001
CXA1234AR
PB HEAD AMP

REC VI ADJ
REC PCM ADJ
ATF VOL
REC AMP2
H AMP2
REC AMP1
H AMP1
2ND RF AMP2
2ND RF AMP1
REF
BUFF
PB GND
REC GND
PCM VOL
CONTROL
6dB ATT
SW B/W
PCM VIDEO
C/D
E.F
H Iso
O.C
REC Amp GND
Head Amp GND
H. AMP Vcc
REC Amp Vcc
REG

YIN
RF SWP
CIN
PBS
PCM OUT
PCM REC ACK
Jog
EF
PB VCC
EF

REC PCM RF
VIDEO REC
HCHG
REC VI RF
RP PB MODE
RF SWP
REG GND
PB PCM RF
PB RF
RF IN
PB RF
PCM REC
AF REC
RF CH2
RF CH1

RP-73
BOARD
(LP)

Q043 ME/MP SWITCH

Q041,042 ERASE OSC

Q007 INVERTER

Q031,032 VIDEO AMP

IC051
NJM2233A
PB PCM SP/LP SW

PCM

CHASSIS GND

1 | 2 | 3 | 4 | 5 | 6 | 7 | 8 | 9 | 10 | 11 | 12

— Ref. No. FR-40 BOARD: 1000 series, RP-73(SP) BOARD: 2000 series, RP-73(LP) BOARD: 3000 series —

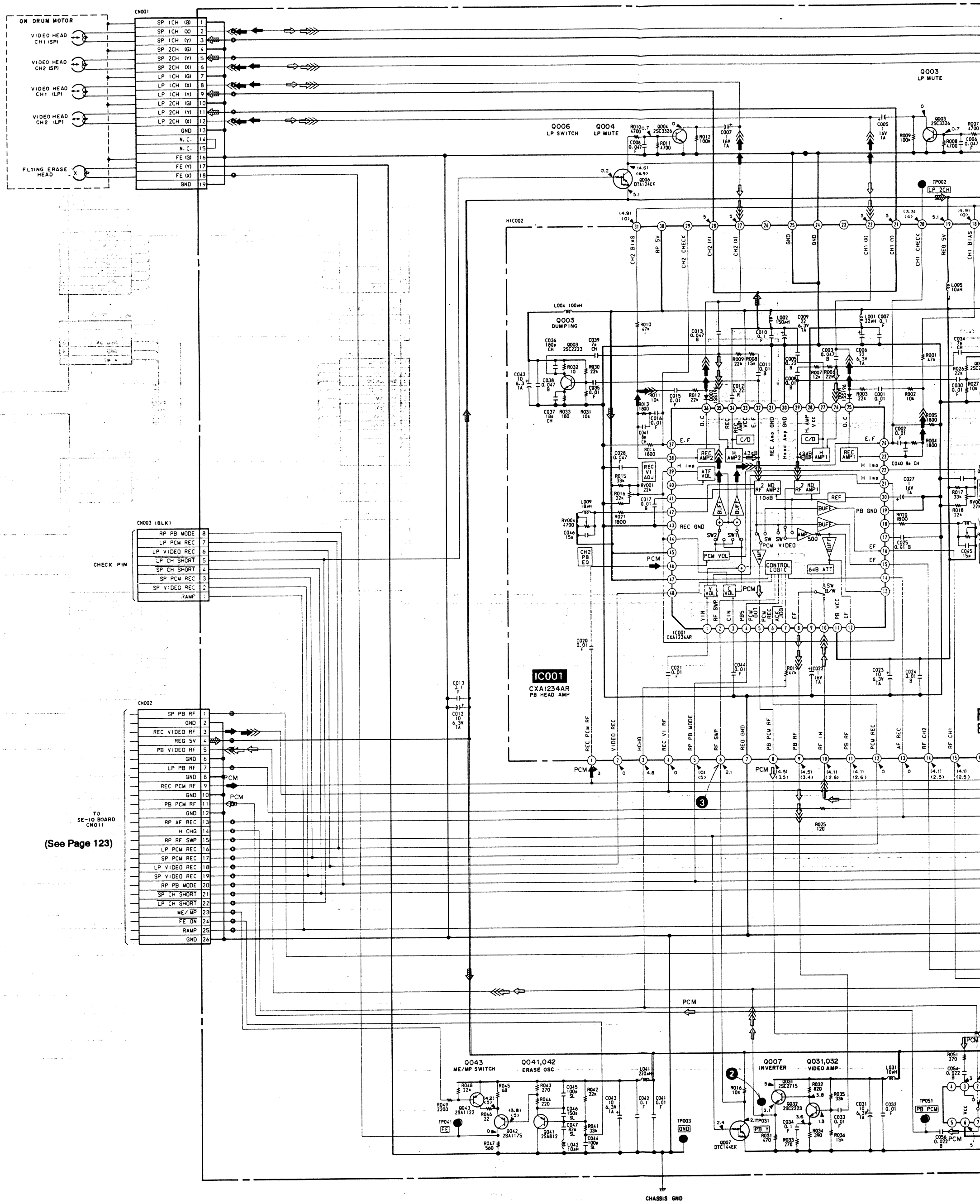

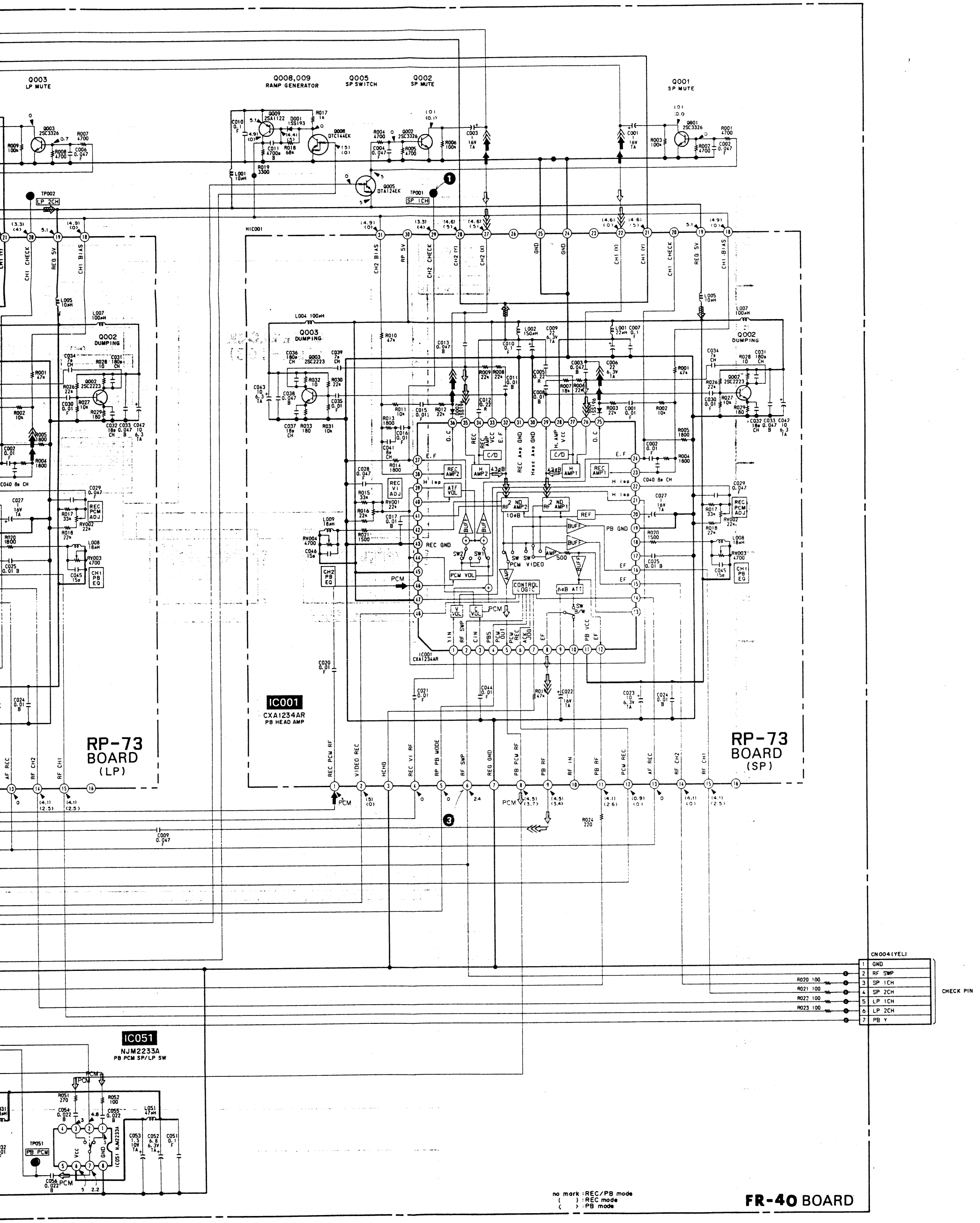

no mark : REC/PB mode
( ) : REC mode
〈 〉 : PB mode

VIDEO VIDEO

— Ref. No. FR-40 BOARD: 1000 series, RP-73(SP) BOARD: 2000 series, RP-73(LP) BOARD: 3000 series —

FR-40 BOARD (COMPONENT SIDE)

FR-40 BOARD (COMPONENT SIDE)

D001 A-1

IC051 D-1

Q008 B-1
Q009 A-1
Q031 E-2
Q032 D-2
Q042 D-1

FR-40 BOARD (CONDUCTOR SIDE)

Q001 B-1
Q002 A-2
Q003 D-2
Q004 C-1
Q005 B-2
Q006 D-2
Q007 C-2
Q041 D-1
Q043 D-1

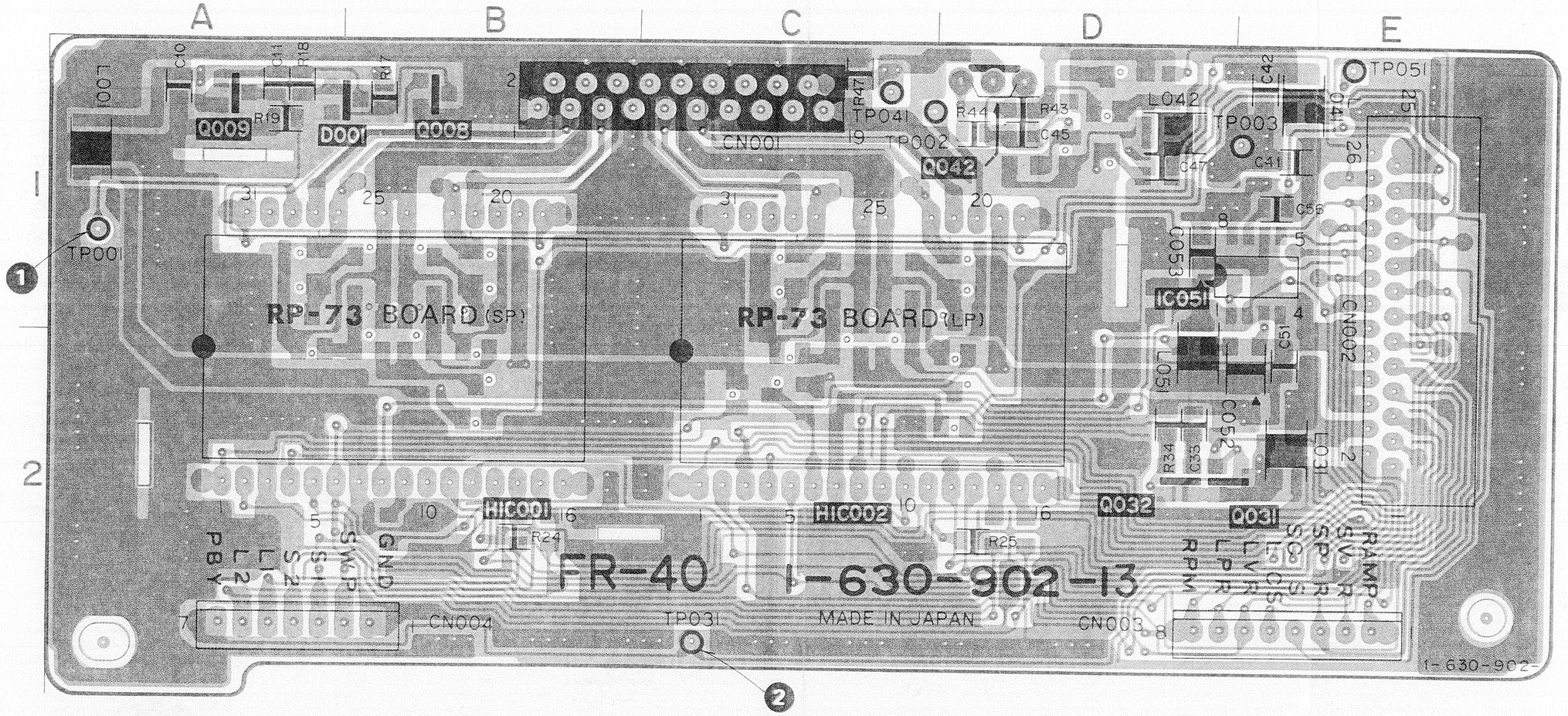

RP-73 BOARD (SP),(LP)(COMPONENT SIDE)

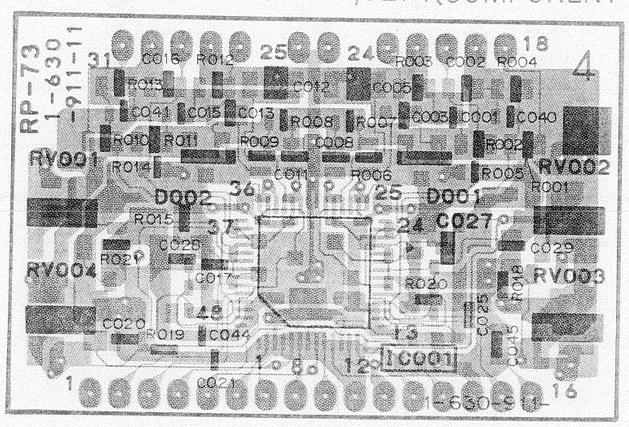

RP-73 BOARD (SP),(LP)(CONDUCTOR SIDE)

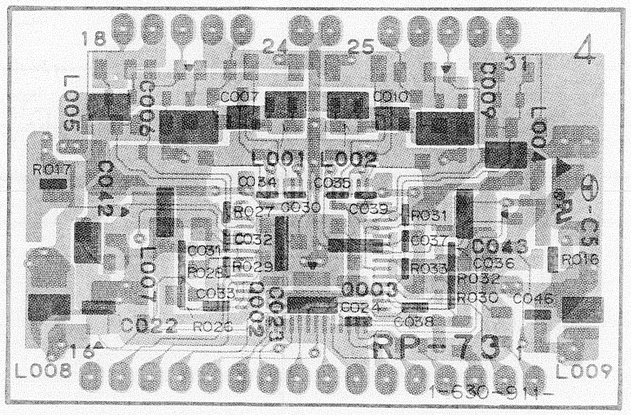

A-7061-822-A RP-73 (SP) BOARD, COMPLETE
****

〈 DIODE 〉

D001 8-719-801-41 DIODE 1SS196
D002 8-719-801-41 DIODE 1SS196

〈 IC 〉

IC001 8-752-033-00 IC CXA1234AR

〈 TRANSISTOR 〉

Q002 8-729-102-07 TRANSISTOR 2SC2223-F13
Q003 8-729-102-07 TRANSISTOR 2SC2223-F13

FR-40 BOARD (CONDUCTOR SIDE)

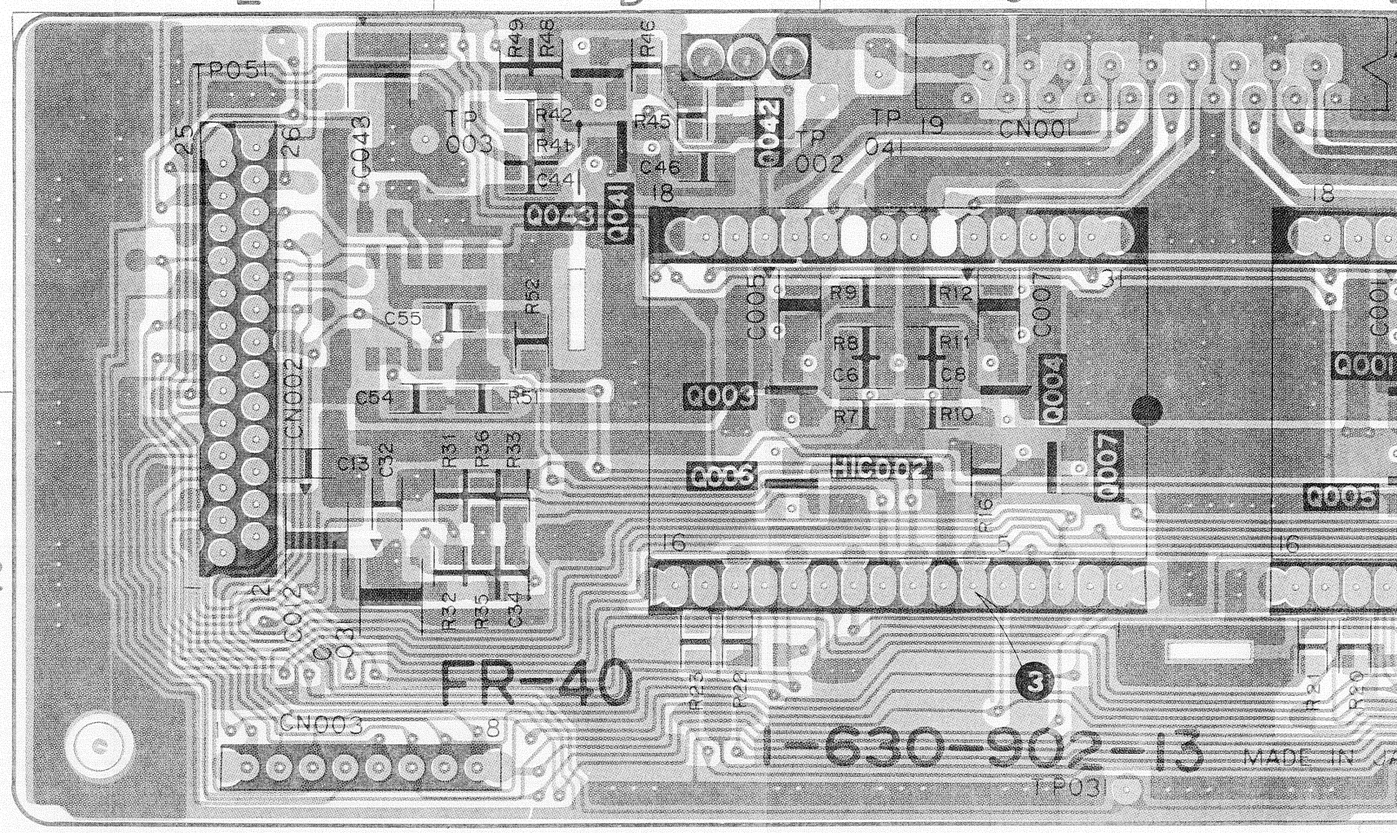

RP-73 BOARD (SP),(LP) (CONDUCTOR SIDE)

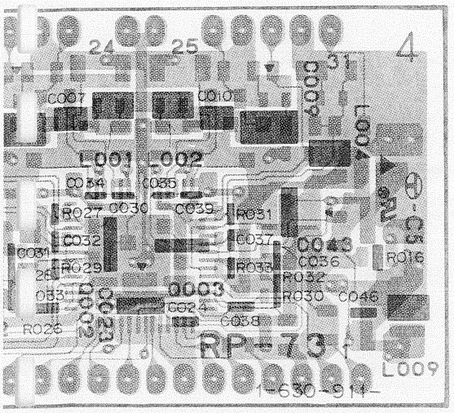

A-7061-822-A RP-73 (SP) BOARD, COMPLETE

****

〈 DIODE 〉

D001 8-719-801-41 DIODE 1SS196
D002 8-719-801-41 DIODE 1SS196

〈 IC 〉

IC001 8-752-033-00 IC CXA1234AR

〈 TRANSISTOR 〉

Q002 8-729-102-07 TRANSISTOR 2SC2223-F13
Q003 8-729-102-07 TRANSISTOR 2SC2223-F13

A-7061-827-A RP-73 (LP) BOARD, COMPLETE

****

〈 DIODE 〉

D001 8-719-801-41 DIODE 1SS196
D002 8-719-801-41 DIODE 1SS196

〈 IC 〉

IC001 8-752-033-00 IC CXA1234AR

〈 TRANSISTOR 〉

Q002 8-729-102-07 TRANSISTOR 2SC2223-F13
Q003 8-729-102-07 TRANSISTOR 2SC2223-F13

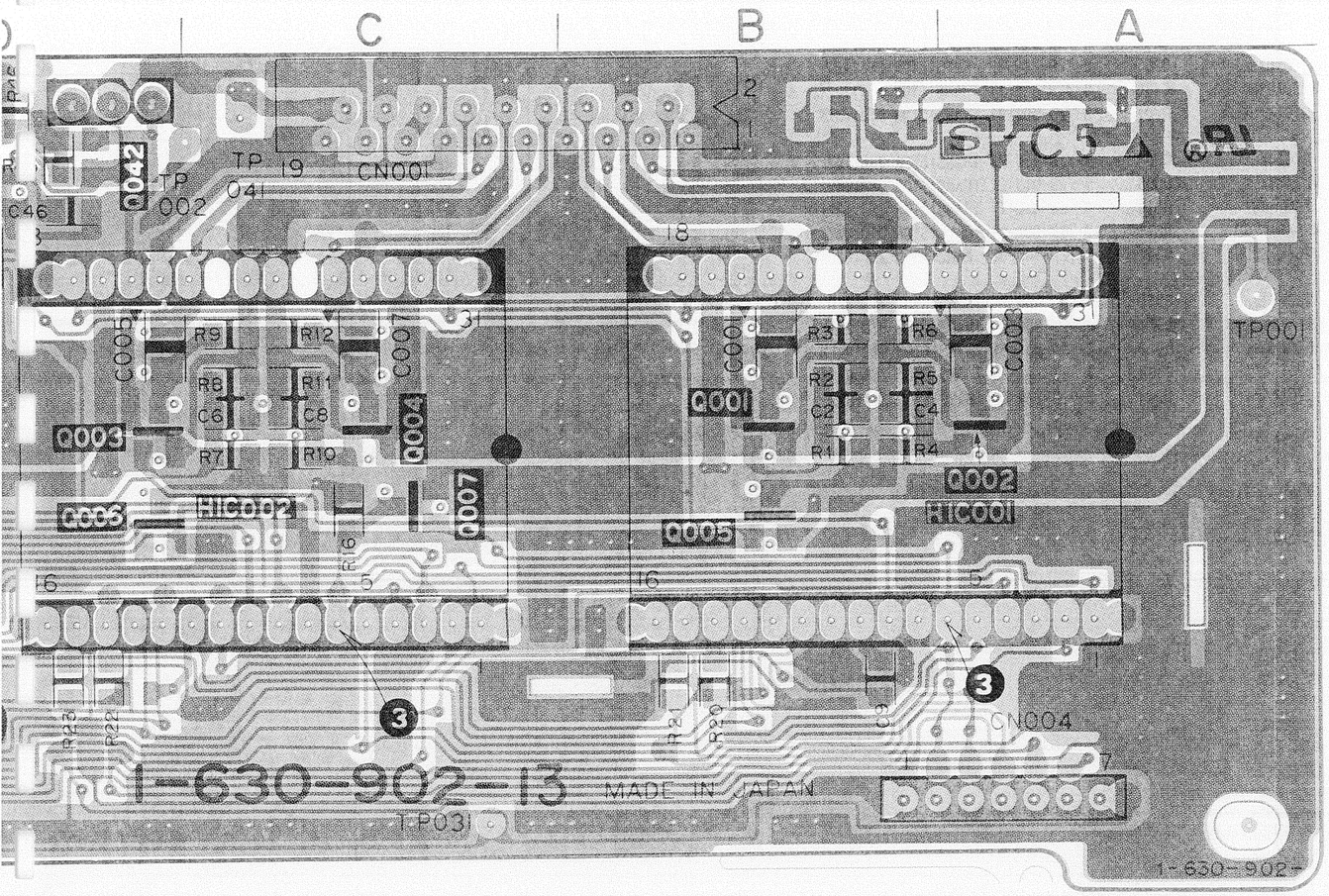

13

* A-7061-821-A FR-40 BOARD, COMPLETE
****

〈 DIODE 〉

D001	8-719-400-18	DIODE MA152WK

〈 IC 〉

IC051	8-759-710-09	IC NJM2233AM

〈 TRANSISTOR 〉

Q001	8-729-202-38	TRANSISTOR 2SC3326N
Q002	8-729-202-38	TRANSISTOR 2SC3326N
Q003	8-729-202-38	TRANSISTOR 2SC3326N
Q004	8-729-202-38	TRANSISTOR 2SC3326N
Q005	8-729-901-05	TRANSISTOR DTA124EK
Q006	8-729-901-05	TRANSISTOR DTA124EK
Q007	8-729-901-01	TRANSISTOR DTC144EK
Q008	8-729-901-01	TRANSISTOR DTC144EK
Q009	8-729-320-17	TRANSISTOR 2SA1122CD
Q031	8-729-201-27	TRANSISTOR 2SC2715
Q032	8-729-102-07	TRANSISTOR 2SC2223
Q041	8-729-216-22	TRANSISTOR 2SA1162
Q042	8-729-119-76	TRANSISTOR 2SA1175
Q043	8-729-320-17	TRANSISTOR 2SA1122CD

* A-7061-820-A HK-4 BOARD, COMPLETE
****

〈 DIODE 〉

D101 8-719-400-18 DIODE MA152WK
D102 8-719-400-18 DIODE MA152WK
D105 8-719-800-76 DIODE 1SS226
D106 8-719-400-18 DIODE MA152WK
D107 8-719-400-18 DIODE MA152WK

D108 8-719-400-18 DIODE MA152WK
D109 8-719-400-18 DIODE MA152WK
D301 8-719-400-18 DIODE MA152WK
D302 8-719-400-18 DIODE MA152WK
D401 8-719-400-18 DIODE MA152WK

D402 8-719-400-18 DIODE MA152WK
D403 8-719-400-18 DIODE MA152WK
D404 8-719-400-18 DIODE MA152WK
D405 8-719-400-18 DIODE MA152WK
D501 8-719-400-18 DIODE MA152WK

D701 8-719-104-34 DIODE 1S2836
D702 8-719-400-18 DIODE 1S2837
D801 8-719-400-18 DIODE 1S2837
D802 8-719-400-18 DIODE 1S2837
D803 8-719-104-34 DIODE 1S2836

D901 8-719-400-18 DIODE MA152WK

〈 IC 〉

IC101 8-759-233-94 IC TA8607F
IC102 8-759-925-60 IC BA401
IC299 8-759-239-58 IC TC74HC221AF
IC301 8-752-002-XX IC CX20030
IC401 8-752-031-01 IC CXA1047M

IC501 8-752-003-12 IC CX20031
IC601 8-752-202-10 IC CX22021
IC602 8-752-003-22 IC CX20032
IC603 8-759-914-56 IC CX23054
IC701 8-752-322-24 IC CXL1008M

IC801 8-752-322-24 IC CXL1008M
IC851 8-759-710-05 IC NJM2238M
IC901 8-759-925-74 IC TC74HC04AF
IC902 8-759-925-74 IC TC74HC04AF

〈 TRANSISTOR 〉

Q101 8-729-102-07 TRANSISTOR 2SC2223
Q102 8-729-901-04 TRANSISTOR DTA114EK
Q103 8-729-102-07 TRANSISTOR 2SC2223
Q104 8-729-901-01 TRANSISTOR DTC144EK
Q105 8-729-904-07 TRANSISTOR FMG2-T-148

Q107 8-729-100-66 TRANSISTOR 2SC1623
Q110 8-729-901-01 TRANSISTOR DTC144EK
Q111 8-729-102-07 TRANSISTOR 2SC2223
Q112 8-729-901-01 TRANSISTOR DTC144EK
Q113 8-729-102-07 TRANSISTOR 2SC2223

Q116 8-729-102-07 TRANSISTOR 2SC2223
Q117 8-729-102-07 TRANSISTOR 2SC2223
Q118 8-729-102-07 TRANSISTOR 2SC2223
Q119 8-729-102-07 TRANSISTOR 2SC2223
Q120 8-729-102-07 TRANSISTOR 2SC2223

Q121 8-729-100-66 TRANSISTOR 2SC1623
Q122 8-729-901-01 TRANSISTOR DTC144EK
Q123 8-729-901-01 TRANSISTOR DTC144EK
Q124 8-729-901-06 TRANSISTOR DTA144EK
Q125 8-729-901-01 TRANSISTOR DTC144EK

Q126 8-729-100-66 TRANSISTOR 2SC1623
Q127 8-729-100-66 TRANSISTOR 2SC1623
Q128 8-729-102-07 TRANSISTOR 2SC2223
Q129 8-729-100-66 TRANSISTOR 2SC1623
Q130 8-729-907-26 TRANSISTOR IMX1

Q131 8-729-320-17 TRANSISTOR 2SA1122CD
Q132 8-729-202-38 TRANSISTOR 2SC3326N
Q181 8-729-907-46 TRANSISTOR IMZ1
Q182 8-729-903-10 TRANSISTOR FMW1
Q184 8-729-320-17 TRANSISTOR 2SA1122CD

Q201 8-729-102-07 TRANSISTOR 2SC2223
Q202 8-729-202-38 TRANSISTOR 2SC3326N
Q203 8-729-202-38 TRANSISTOR 2SC3326N
Q204 8-729-904-07 TRANSISTOR FMG2
Q206 8-729-122-63 TRANSISTOR 2SA1226

Q207 8-729-202-38 TRANSISTOR 2SC3326N
Q208 8-729-201-27 TRANSISTOR 2SC2715
Q209 8-729-201-27 TRANSISTOR 2SC2715
Q210 8-729-102-07 TRANSISTOR 2SC2223
Q211 8-729-102-07 TRANSISTOR 2SC2223

Q212 8-729-901-01 TRANSISTOR DTC144EK
Q213 8-729-901-06 TRANSISTOR DTA144EK
Q214 8-729-102-07 TRANSISTOR 2SC2223
Q215 8-729-902-96 TRANSISTOR FMS1
Q217 8-729-102-07 TRANSISTOR 2SC2223

Q218 8-729-102-07 TRANSISTOR 2SC2223
Q219 8-729-901-01 TRANSISTOR DTC144EK
Q299 8-729-901-06 TRANSISTOR DTA144EK
Q301 8-729-100-66 TRANSISTOR 2SC1623
Q302 8-729-100-66 TRANSISTOR 2SC1623

Q305 8-729-100-66 TRANSISTOR 2SC1623
Q306 8-729-100-66 TRANSISTOR 2SC1623
Q307 8-729-100-66 TRANSISTOR 2SC1623
Q309 8-729-100-66 TRANSISTOR 2SC1623
Q310 8-729-100-66 TRANSISTOR 2SC1623

Q311 8-729-100-66 TRANSISTOR 2SC1623
Q312 8-729-901-06 TRANSISTOR DTA144EK
Q313 8-729-320-17 TRANSISTOR 2SA1122CD
Q314 8-729-100-66 TRANSISTOR 2SC1623
Q315 8-729-100-66 TRANSISTOR 2SC1623

Q316 8-729-901-01 TRANSISTOR DTC144EK
Q317 8-729-100-66 TRANSISTOR 2SC1623
Q318 8-729-901-06 TRANSISTOR DTA144EK
Q319 8-729-100-66 TRANSISTOR 2SC1623
Q320 8-729-901-01 TRANSISTOR DTC144EK

Q321 8-729-901-01 TRANSISTOR DTC144EK
Q322 8-729-320-17 TRANSISTOR 2SA1122CD
Q323 8-729-901-01 TRANSISTOR DTC144EK
Q324 8-729-901-01 TRANSISTOR DTC144EK
Q325 8-729-901-06 TRANSISTOR DTA144EK

Q326 8-729-901-06 TRANSISTOR DTA144EK
Q328 8-729-100-66 TRANSISTOR 2SC1623
Q401 8-729-100-66 TRANSISTOR 2SC1623
Q402 8-729-100-66 TRANSISTOR 2SC1623
Q403 8-729-901-01 TRANSISTOR DTC144EK

Q404 8-729-901-01 TRANSISTOR DTC144EK
Q405 8-729-901-06 TRANSISTOR DTA144EK
Q406 8-729-100-66 TRANSISTOR 2SC1623
Q407 8-729-320-17 TRANSISTOR 2SA1122CD
Q408 8-729-320-17 TRANSISTOR 2SA1122CD

Q409 8-729-100-66 TRANSISTOR 2SC1623
Q410 8-729-320-17 TRANSISTOR 2SA1122CD
Q411 8-729-901-01 TRANSISTOR DTC144EK
Q412 8-729-901-01 TRANSISTOR DTC144EK
Q413 8-729-901-01 TRANSISTOR DTC144EK

Q414 8-729-100-66 TRANSISTOR 2SC1623
Q415 8-729-320-17 TRANSISTOR 2SA1122CD
Q416 8-729-320-17 TRANSISTOR 2SA1122CD
Q417 8-729-901-01 TRANSISTOR DTC144EK
Q418 8-729-100-66 TRANSISTOR 2SC1623

Q419 8-729-100-66 TRANSISTOR 2SC1623
Q420 8-729-202-38 TRANSISTOR 2SC3326N
Q421 8-729-202-38 TRANSISTOR 2SC3326N
Q422 8-729-100-66 TRANSISTOR 2SC1623
Q423 8-729-100-66 TRANSISTOR 2SC1623

Q424 8-729-901-01 TRANSISTOR DTC144EK
Q425 8-729-100-66 TRANSISTOR 2SC1623
Q426 8-729-100-66 TRANSISTOR 2SC1623
Q427 8-729-320-17 TRANSISTOR 2SA1122CD
Q428 8-729-320-17 TRANSISTOR 2SA1122CD

Q429 8-729-901-01 TRANSISTOR DTC144EK
Q430 8-729-901-01 TRANSISTOR DTC144EK
Q431 8-729-320-17 TRANSISTOR 2SA1122CD
Q501 8-729-901-06 TRANSISTOR DTA144EK
Q502 8-729-901-01 TRANSISTOR DTC144EK

Q503 8-729-901-00 TRANSISTOR DTC124EK
Q601 8-729-901-01 TRANSISTOR DTC144EK
Q603 8-729-901-01 TRANSISTOR DTC144EK
Q604 8-729-100-66 TRANSISTOR 2SC1623
Q605 8-729-100-66 TRANSISTOR 2SC1623

Q606 8-729-901-01 TRANSISTOR DTC144EK
Q607 8-729-100-66 TRANSISTOR 2SC1623
Q608 8-729-320-17 TRANSISTOR 2SA1122CD
Q701 8-729-901-01 TRANSISTOR DTC144EK
Q702 8-729-216-22 TRANSISTOR 2SA1162

Q703 8-729-216-22 TRANSISTOR 2SA1162
Q704 8-729-216-22 TRANSISTOR 2SA1162
Q705 8-729-320-17 TRANSISTOR 2SA1122CD
Q706 8-729-901-01 TRANSISTOR DTC144EK
Q707 8-729-901-01 TRANSISTOR DTC144EK

Q708 8-729-216-22 TRANSISTOR 2SA1162
Q709 8-729-216-22 TRANSISTOR 2SA1162
Q710 8-729-320-17 TRANSISTOR 2SA1122CD
Q801 8-729-901-01 TRANSISTOR DTC144EK
Q802 8-729-320-17 TRANSISTOR 2SA1122CD

Q803 8-729-216-22 TRANSISTOR 2SA1162
Q804 8-729-216-22 TRANSISTOR 2SA1162
Q805 8-729-216-22 TRANSISTOR 2SA1162
Q806 8-729-320-17 TRANSISTOR 2SA1122CD
Q807 8-729-901-01 TRANSISTOR DTC144EK

Q808 8-729-216-22 TRANSISTOR 2SA1162
Q809 8-729-216-22 TRANSISTOR 2SA1162
Q810 8-729-320-17 TRANSISTOR 2SA1122CD
Q811 8-729-901-01 TRANSISTOR DTC144EK
Q851 8-729-100-66 TRANSISTOR 2SC1623

Q852 8-729-100-66 TRANSISTOR 2SC1623
Q901 8-729-901-00 TRANSISTOR DTC124EK
Q902 8-729-901-01 TRANSISTOR DTC144EK
Q903 8-729-104-25 TRANSISTOR 2SB804-AV
Q904 8-729-100-66 TRANSISTOR 2SC1623

HK-4 (C VIDEO PROCESS, Y VIDEO PROCESS, Y/C/AFM MIX) PRINTED WIRING

— Ref. No. HK-4 BOARD: 4000 series —

HK-4 BOARD (COMPONENT SIDE)

D404 D-2
D701 G-3
D803 G-6
D901 F-6

IC101 E-5
IC102 E-5
IC301 E-2
IC401 C-1
IC601 A-5
IC602 B-4
IC701 G-3
IC801 G-5
IC851 G-4
IC901 C-6
IC902 C-5

Q105 D-5
Q107 F-6
Q112 D-5
Q124 F-4
Q125 E-6
Q126 E-6
Q130 D-6
Q181 E-6
Q182 F-5
Q202 D-4
Q203 D-4
Q204 D-4
Q215 D-5
Q219 D-4
Q306 F-2
Q307 F-2
Q315 F-2
Q316 F-2
Q317 F-3
Q322 D-2
Q323 D-1
Q324 E-3
Q325 F-2
Q402 C-3
Q405 D-2
Q413 D-1
Q414 E-3
Q417 D-2
Q422 D-3
Q423 D-3
Q426 D-1
Q427 C-3
Q602 A-5
Q603 B-5
Q604 C-5
Q605 C-4
Q607 B-6
Q608 C-6
Q701 G-2
Q801 H-4
Q802 G-6
Q903 F-5

HK-4 BOARD (CONDUCTOR SIDE)

D101 D-6
D102 D-5
D105 E-4
D106 F-4
D107 F-4
D108 D-4
D301 D-1
D302 E-1
D401 D-2
D402 D-1
D403 D-1
D405 D-2
D501 C-1
D702 F-3
D801 G-6
D802 G-6

IC501 B-2
IC603 B-5

Q101 E-6
Q102 E-5
Q103 E-5
Q104 E-5
Q110 D-5
Q111 E-5
Q113 E-4
Q116 F-4
Q117 E-4
Q118 F-4
Q119 E-4
Q120 F-4
Q121 D-4
Q122 E-5
Q123 E-5
Q127 E-6
Q128 E-6
Q129 D-6
Q131 D-6
Q184 F-5
Q201 D-4
Q206 D-4
Q207 C-4
Q208 C-4
Q209 C-5
Q210 D-5
Q211 D-5
Q212 D-5
Q213 C-5
Q214 C-6
Q217 D-5
Q218 D-6
Q301 E-1
Q302 G-1
Q305 G-1
Q309 F-1
Q310 F-2
Q311 F-2
Q312 F-3
Q313 F-3
Q314 F-2
Q318 F-1
Q319 E-1
Q320 E-1
Q321 E-2
Q326 F-3
Q328 F-2
Q401 C-3
Q403 D-3
Q404 D-3
Q406 E-2
Q407 C-2
Q408 D-3
Q409 D-3
Q410 D-3
Q411 D-3
Q412 E-2
Q415 D-2
Q416 D-2
Q418 D-1
Q419 D-2
Q420 D-1
Q421 C-1
Q424 C-2
Q425 E-3
Q428 C-3
Q429 C-3
Q430 C-4
Q431 C-3
Q501 C-1
Q502 C-1
Q503 B-1
Q601 B-4
Q606 C-4

Q702 G-2
Q703 G-2
Q704 G-2
Q705 G-1
Q706 H-3
Q707 H-3
Q708 H-3
Q709 H-2
Q710 H-2
Q803 G-5
Q804 G-5
Q805 G-5
Q806 H-4
Q807 H-6
Q808 H-6
Q809 H-5
Q810 H-5
Q811 G-5
Q851 G-4
Q852 H-4
Q901 F-6
Q902 F-6

HK-4 BOARD (COMPONENT SIDE)

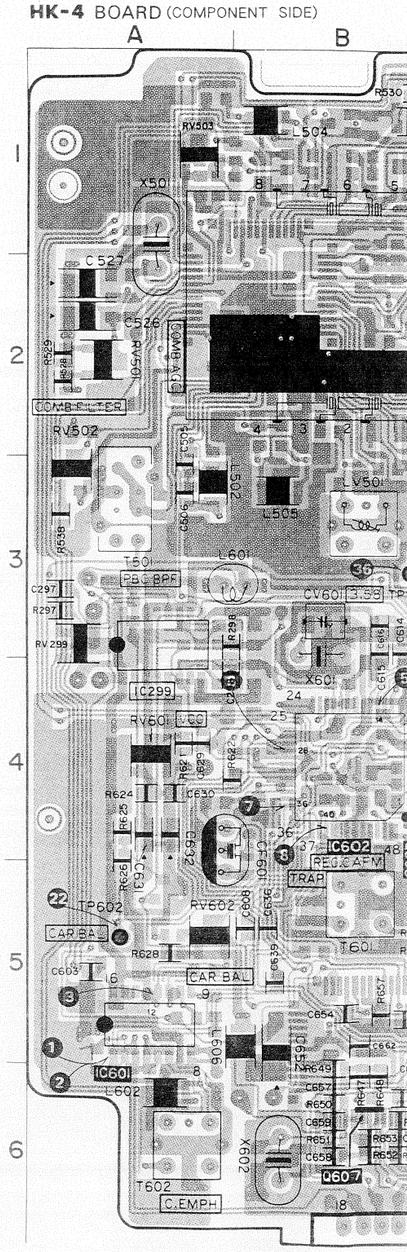

HK-4 BOARD (COMPONENT SIDE)

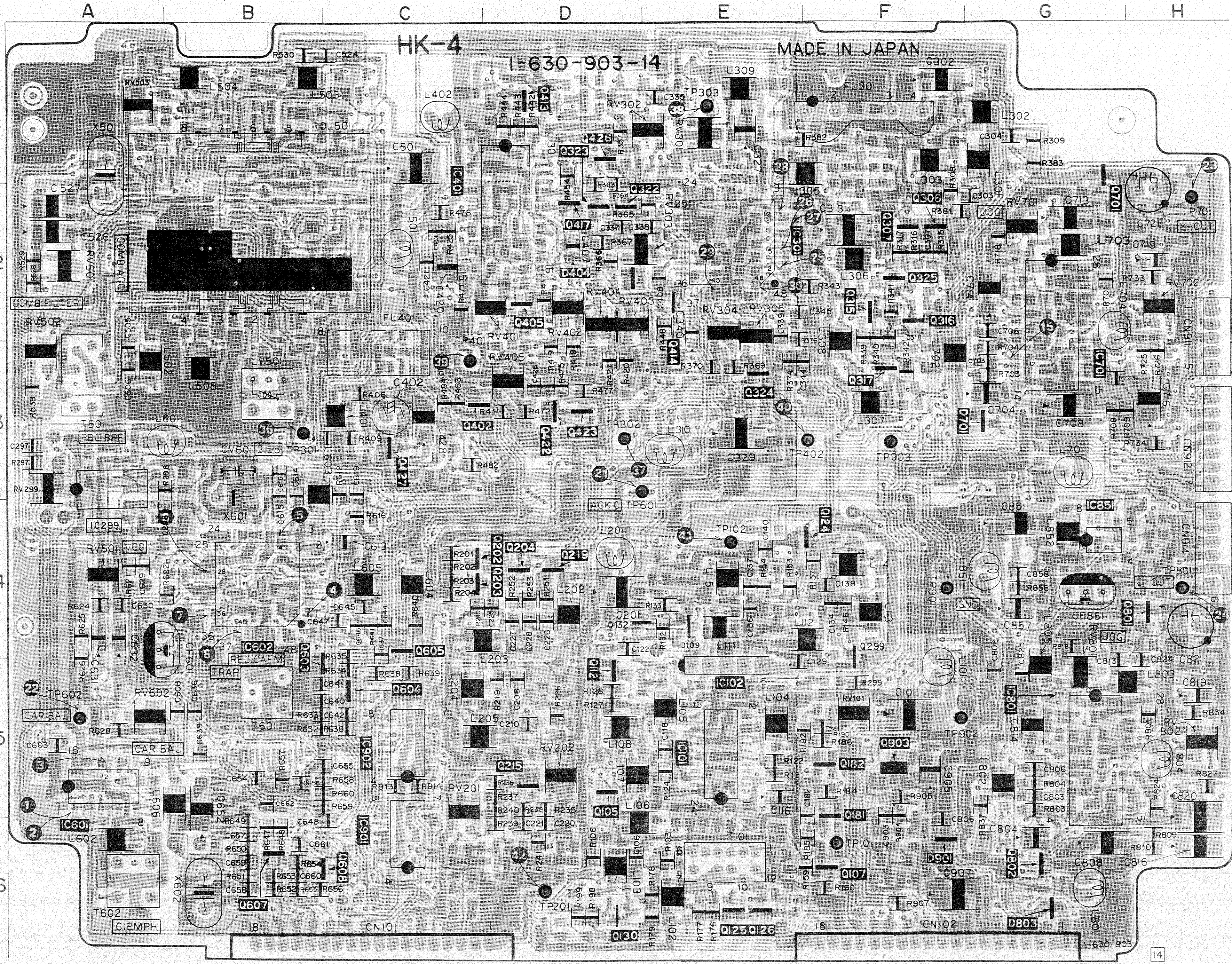

HK-4 BOARD (CONDUCTOR SIDE)

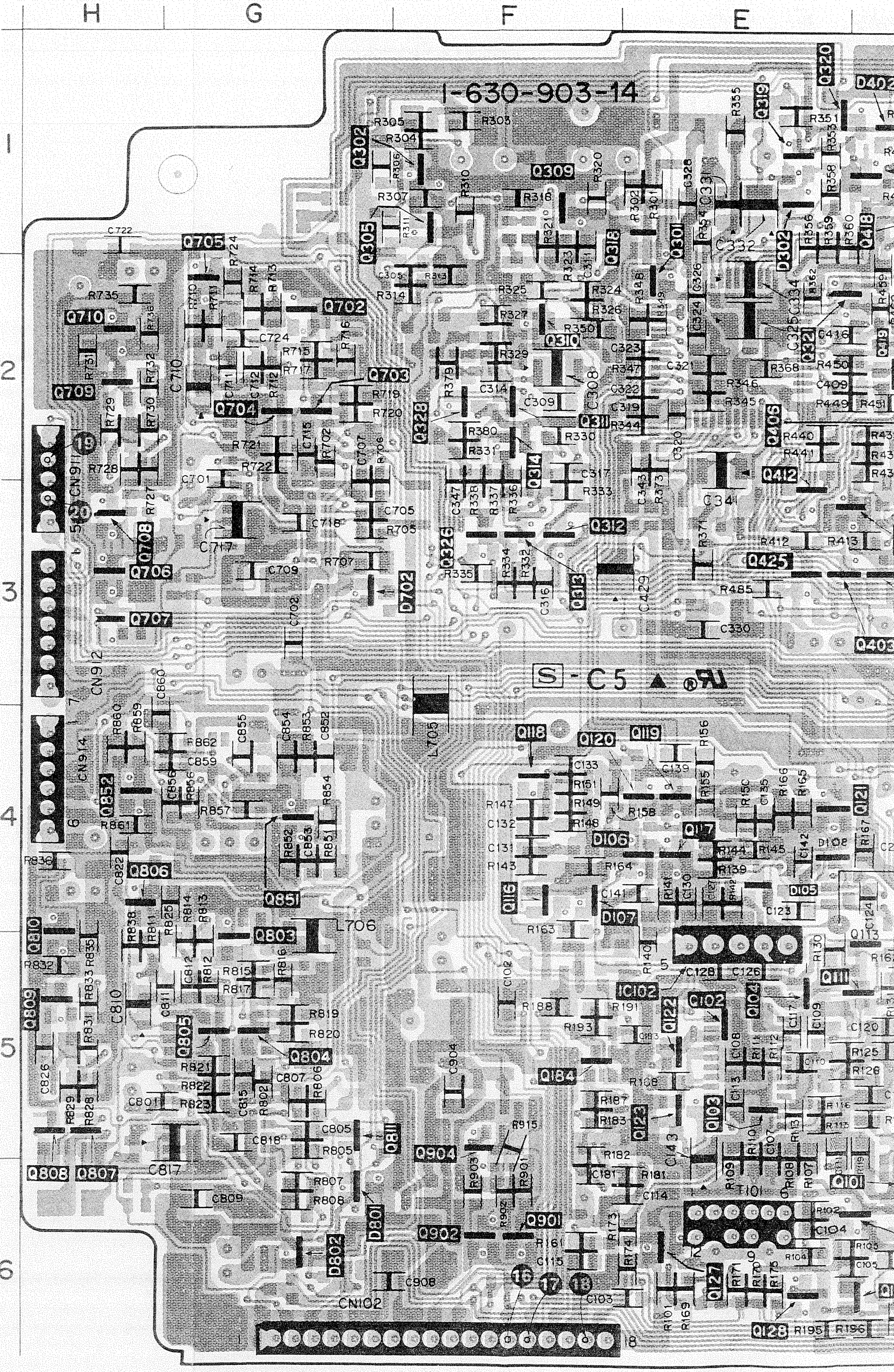

HK-4 BOARD (CONDUCTOR SIDE)

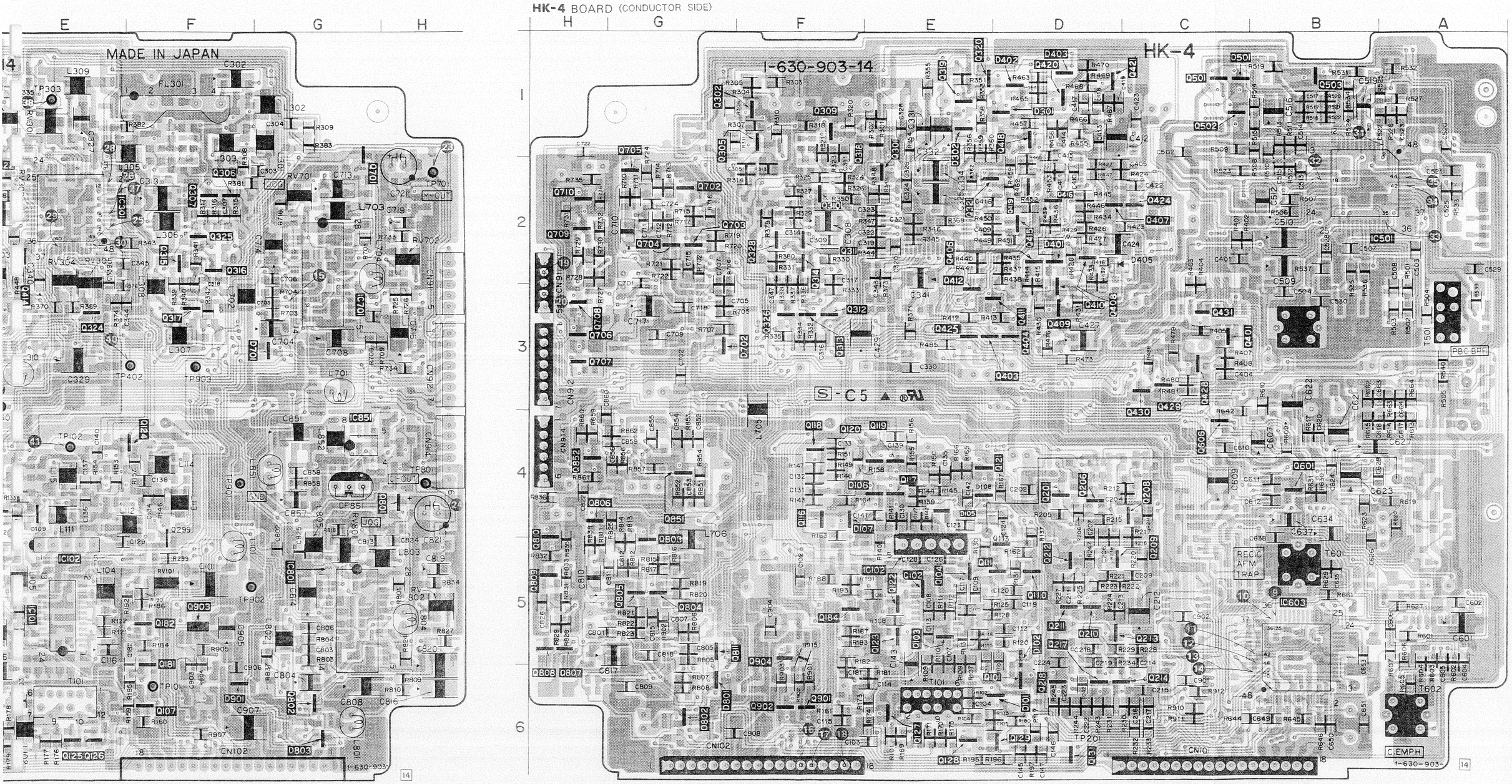

VIDEO VIDEO

HK-4 (C VIDEO PROCESS) SCHEMATIC DIAGRAM

— Ref. No. HK-4 BOARD: 4000 series —

(See Page 94)

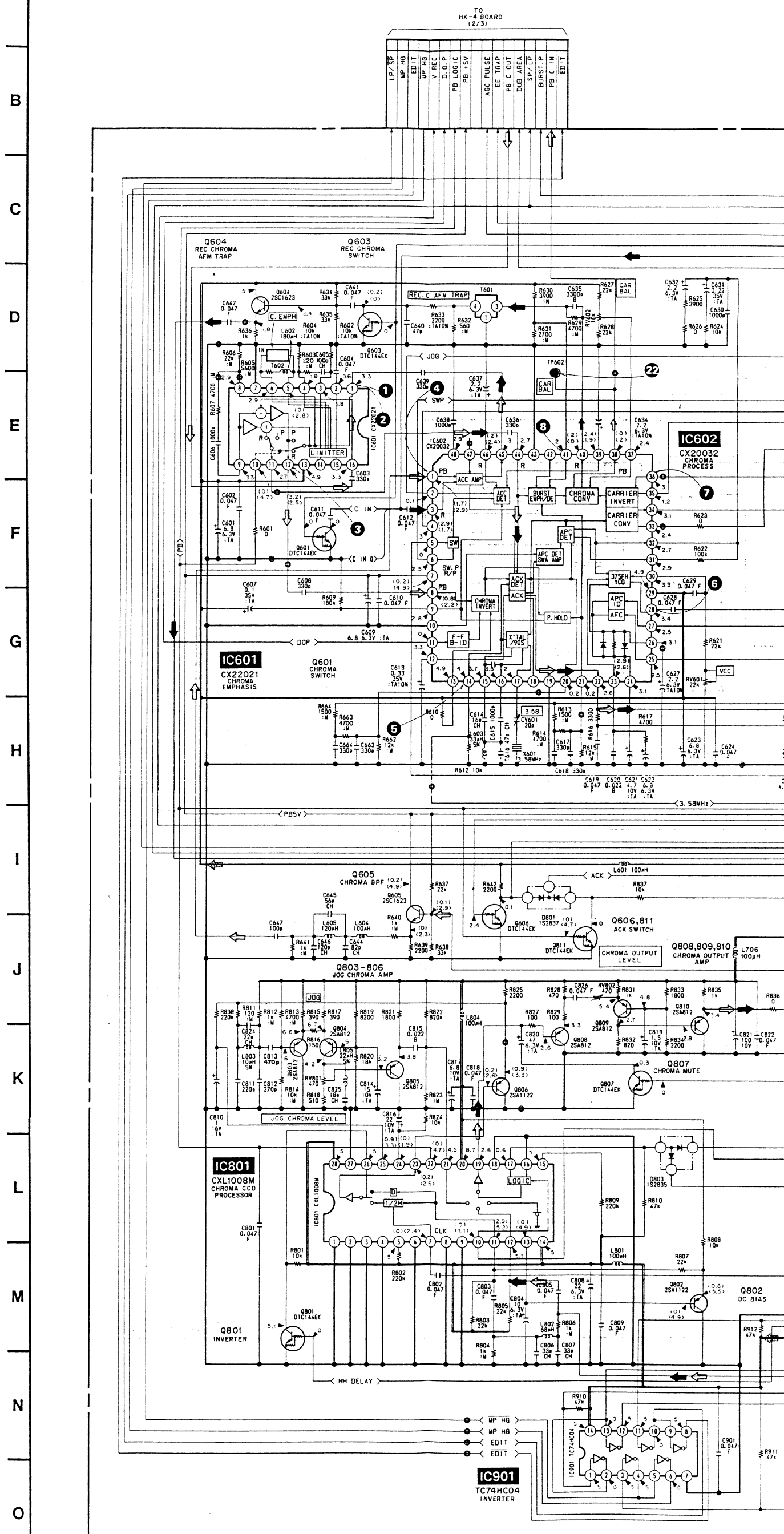

IC299 (TC74HC221AF)

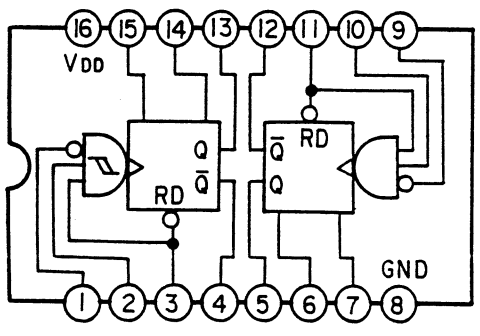

(See Page 109) (See Page 95) (See Page 95)

TO HK-4 BOARD (3/3) — S.U PULSE

TO HK-4 BOARD (2/3) — D.C.D, WE/ UP, WE/ UE, WP/ UE, V1 SWP, COMP. S, REG 5V, REG 5V, HD INSERT, RB Y. RF, REC Y. RF, AGC FAST, Y IN G, Y IN, Y OUT, JOG, GND

TO HK-4 BOARD (2/3) — HJ, HJ, HK, HK, BURST PULSE

IC603 CX23054 AFC PULSE GENERATOR

IC299 TC74HC221A

IC701 CXL1008M Y CCD PROCESSOR

Q607,608 REC ATF INVERT AMP

Q701 INVERTER

Q702,703 JOG Y AMP

Q704 JOG Y AMP

Q705 JOG Y AMP

Q706 VD INSERT

Q708,709 Y OUTPUT AMP

Q707 VD INSERT

Q710 Y OUTPUT AMP

Q852 10.7MHz BPF

Q901,902 PB LOGIC LEVEL

Q903,904 PB+5V REG

Q802 DC BIAS

(See Page 124) (See Page 124) (See Page 109) (See Page 153) (See Page 151) (See Page 151)

TO IF-20 BORD CN901 — ACK IN, GND, C IN, GND, Y IN

TO IF-20 BOARD CN902 — CNR, GND, Y OUT, EDIT, HK, LP/SP, WP/UE

TO IF-20 BOARD CN903 — PB LOGIC IN, ACK OUT, V MUTE, GND, C OUT, GND

TO HK-4 BOARD (3/3) — CNR, AFM STEREO, ATF, REC V RF, REC AFM, PB RF AGC, PB V RF, PB C RF, PB Y RF, REC C RF, REC Y RF

CN101: SEL 1, SEL 2, SP/LP, REF V, DUB AREA, HD INSERT, GND (ATF), REC ATF, GND(AFM), REC AFM, D.C.D, HK, WE/UP, AFM ST. V CONT, MPHG, REC ATF, GND(REC V), REC V RF

CN102: V1 SWP, COMP SYNC, REG 5V(ANA), REG 5V(ANA), GND (ANA), GND (ANA), GND (ANA), REG +9V, V PB MODE, AGC FAST, C. MUTE, JOG, JOG VD, V MUTE, GND(PB V RF), PB V RF, HH DELAY, GND(PB RF AGC), PB RF AGC

TO HK-4 BOARD CN007

TO HK-4 BOARD CN006

• SIGNAL PAT

	CHROM
REC	➡
PB	⇨

no mark : REC / PB mo
( ) : REC mode
< > : PB mode

16 | 17 | 18 | 19 | 20 | 21 | 22

(See Page 95)

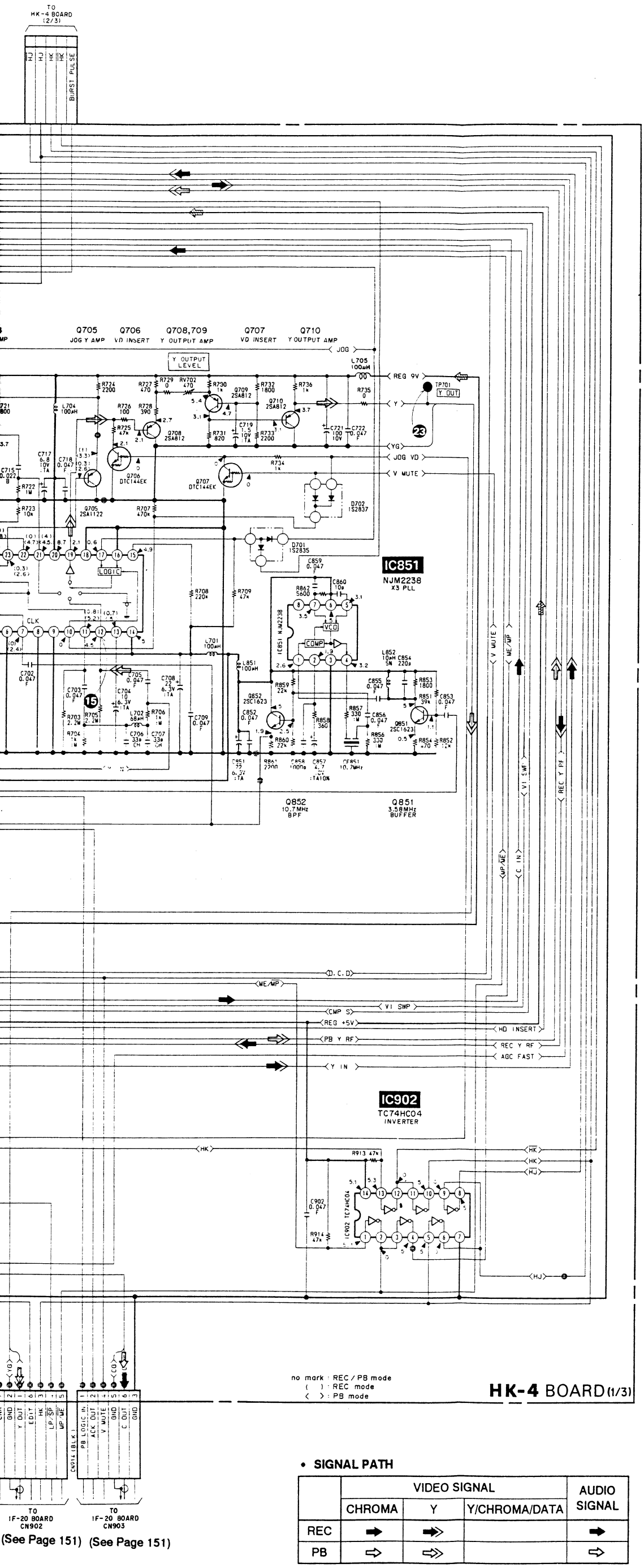

(See Page 151) (See Page 151)

- **SIGNAL PATH**

	VIDEO SIGNAL			AUDIO SIGNAL
	CHROMA	Y	Y/CHROMA/DATA	
REC	➡	➡		➡
PB	⇨	⇨		⇨

HK-4 BOARD (1/3)

1 IC601 (1) REC — 0.5Vp-p, H

2 IC601 (1) PB — 0.9Vp-p, H

3 IC601 (12) PB — 0.4Vp-p, H

4 IC602 (1) PB — 60mVp-p, H

5 IC602 (14) EE — 0.52Vp-p, 3.58MHz

6 IC602 (28) EE — 0.44Vp-p, 5.95MHz

7 IC602 (36) EE — 0.2Vp-p, 4.32MHz

8 IC602 (40) REC — 0.68Vp-p, H

9 IC603 (35) EE — 5Vp-p, 743kHz

10 IC603 (36) REC/PB — 5Vp-p, 2H

11 IC603 (42) REC — 5Vp-p, H

12 IC603 (44) EE — 5Vp-p, H

13 IC603 (46) REC — 5Vp-p, H

14 IC603 (46) PB — 2.6Vp-p, H

15 IC701 (12) PB — 1Vp-p, H

16 CN102 (13) EE — 2.2Vp-p, H

17 CN102 (14) REC/PB — 5Vp-p, 2V

18 CN102 (17) PB — 1.5Vp-p, H

19 CN911 (2) REC — 0.37Vp-p, H

20 CN911 (4) REC — 0.5Vp-p, H

21 TP601 PB — 0.4Vp-p, H

22 TP602 PB — 0.7Vp-p, H

23 TP701 PB — 1Vp-p, H

24 TP801 PB — 0.8Vp-p, H

HK-4 BOARD (2/3)

25 2.4Vp-p — H — IC301 (2) EE

26 2.4Vp-p — H — IC301 (5) PB

27 5Vp-p — H — IC301 (5) REC

28 0.9Vp-p — H — IC301 (12) PB

29 0.36Vp-p — H — IC301 (40) PB

30 0.36Vp-p — H — IC301 (48) PB

31 0.56Vp-p — H — IC501 (2) PB

32 0.9Vp-p — H — IC501 (18) EE

33 0.28Vp-p — H — IC501 (35) PB

34 0.56Vp-p — H — IC501 (42) PB

35 0.5Vp-p — H — IC501 (44) PB

36 0.5Vp-p — H — TP301 REC

37 0.5Vp-p — H — TP302 PB

38 0.9Vp-p — H — TP303 PB

39 0.5Vp-p — 0.1μsec — TP401 REC

40 0.5Vp-p — H — TP402 EE

HK-4 (Y VIDEO PROCESS) SCHEMATIC DIAGRAM

1 2 3 4 5 6

A B C D E F G H I J K L M N O

— Ref. No. HK-4 BOARD: 4000 series —

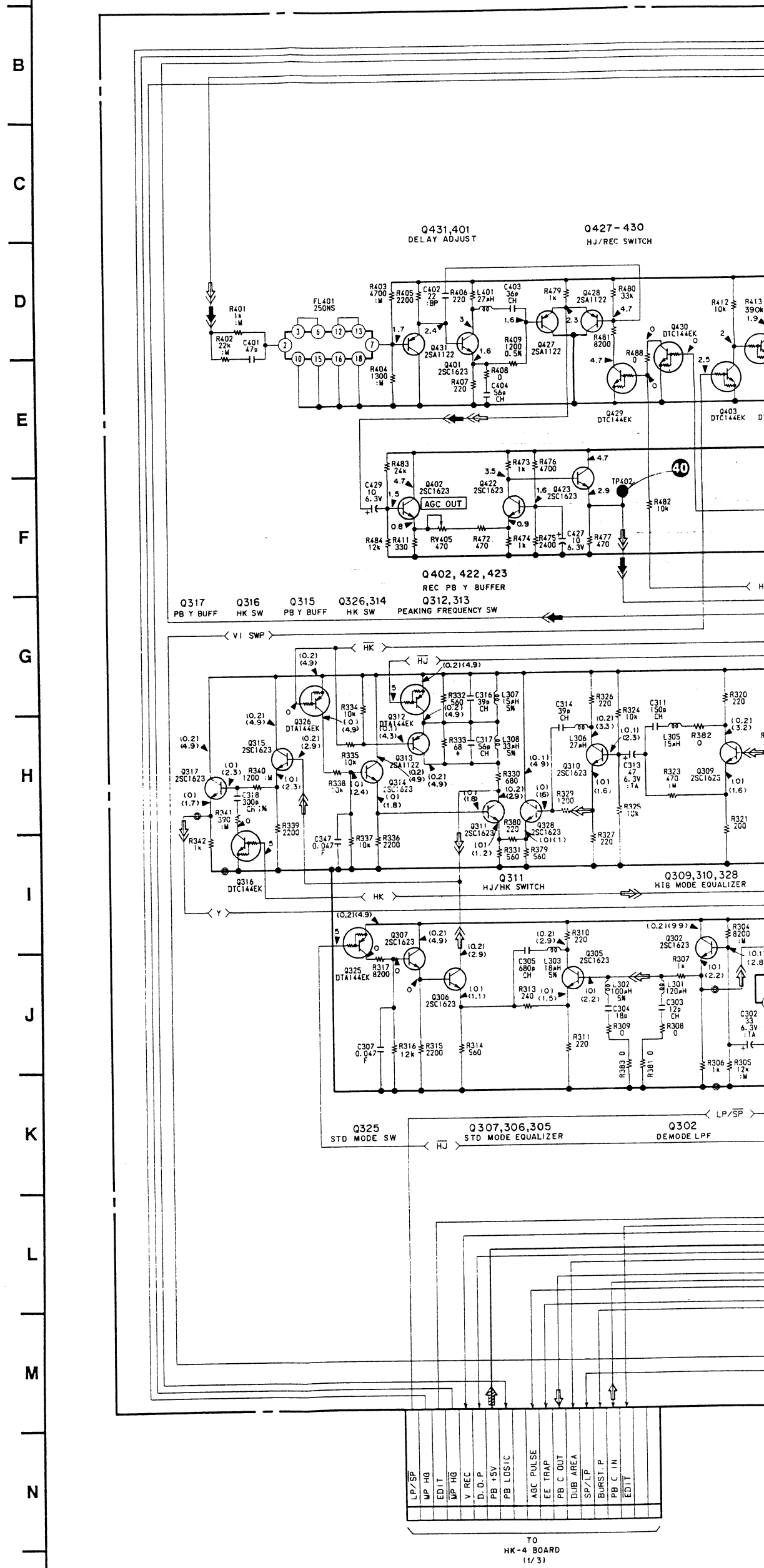

(See Page 90)

VIDEO VIDEO

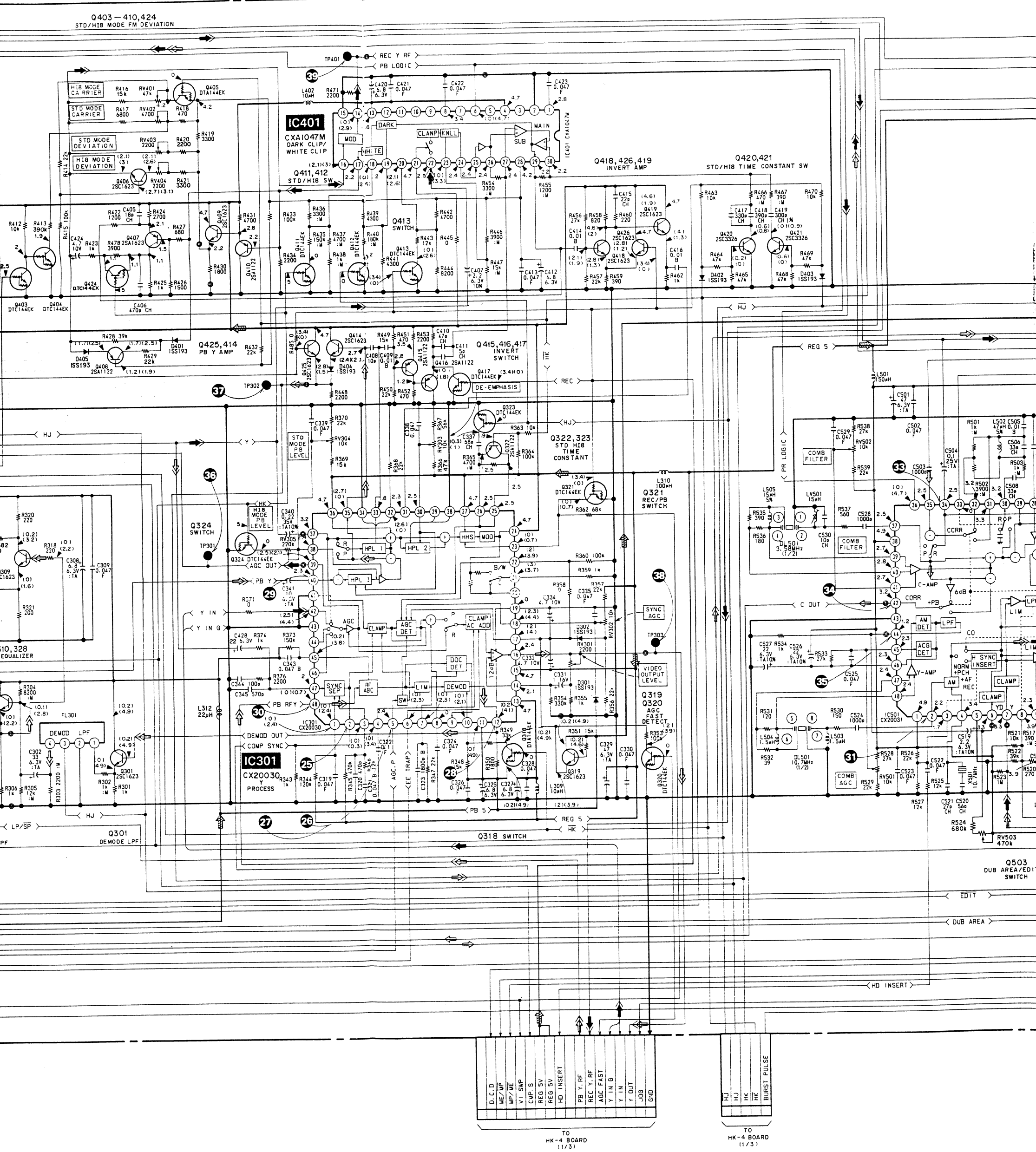

(See Page 91)

(See Page 91)

Q403 – 410,424
STD/HI8 MODE FM DEVIATION

Q427 – 430
HJ/REC SWITCH

Q418,426,419
INVERT AMP

Q420,421
STD/HI8 TIME CONSTANT SW

IC401
CXA1047M
DARK CLIP/
WHITE CLIP

Q411,412
STD/HI8 SW

Q413
SWITCH

Q425,414
PB Y AMP

Q415,416,417
INVERT
SWITCH

Q324
SWITCH

Q322,323
STD HI8
TIME
CONSTANT

Q321
REC/PB
SWITCH

Q319
Q320
AGC
FAST
DETECT

IC301
CX20030
Y
PROCESS

Q311
HJ/HK SWITCH

Q309,310,328
HI8 MODE EQUALIZER

Q307,306,305
STD MODE EQUALIZER

Q302
DEMODE LPF

Q301
DEMODE LPF

Q318 SWITCH

TO
HK-4 BOARD
(1/3)

(See Page 90)

(See Page 91)

(See Page 91)

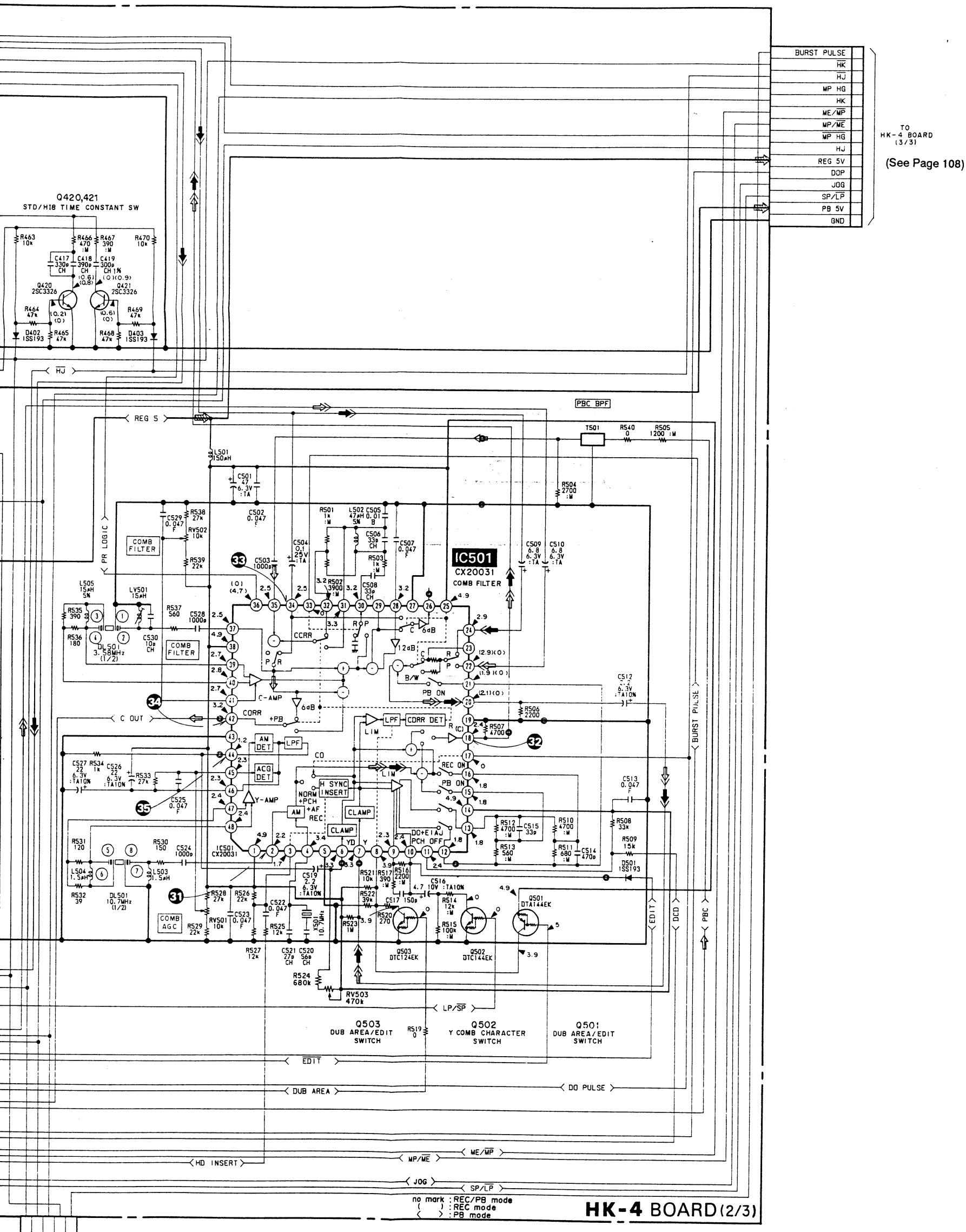

- **SIGNAL PATH**

	VIDEO SIGNAL			AUDIO SIGNAL
	CHROMA	Y	Y/CHROMA/DATA	
REC		➡		
PB	⇨	⇨	⇨	

VIDEO VIDEO

K-4 (C VIDEO PROCESS, Y VIDEO PROCESS, Y/C/AFM MIX) PRINTED WIRING BOARD

— f. No. HK-4 BOARD: 4000 series —

-4 BOARD OMPONENT DE)		HK-4 BOARD (CONDUCTOR SIDE)			
04	D-2	D101	D-6	Q702	G-2
01	G-3	D102	D-5	Q703	G-2
03	G-6	D105	E-4	Q704	G-2
01	F-6	D106	F-4	Q705	G-1
		D107	F-4	Q706	H-3
01	E-5	D108	D-4	Q707	H-3
10	E-5	D301	D-1	Q708	H-3
30	E-2	D302	E-1	Q709	H-2
10	C-1	D401	D-2	Q710	H-2
301	A-5	D402	D-1	Q803	G-5
302	B-4	D403	D-1	Q804	G-5
101	G-3	D405	D-2	Q805	G-5
10	G-5	D501	C-1	Q806	H-4
05	G-4	D702	F-3	Q807	H-6
10	C-6	D801	G-6	Q808	H-6
10	C-5	D802	G-6	Q809	H-5
				Q810	H-5
05	D-5	IC501	B-2	Q811	G-5
07	F-6	IC603	B-5	Q851	G-4
12	D-5			Q852	H-4
24	F-4	Q101	E-6	Q901	F-6
25	E-6	Q102	E-5	Q902	F-6
26	E-6	Q103	E-5		
30	D-6	Q104	E-5		
81	F-6	Q110	D-5		
82	F-5	Q111	E-5		
02	D-4	Q113	E-4		
03	D-4	Q116	F-4		
04	D-4	Q117	E-4		
15	D-5	Q118	F-4		
19	D-4	Q119	E-4		
06	F-2	Q120	F-4		
07	F-2	Q121	D-4		
15	F-2	Q122	E-5		
16	F-2	Q123	E-5		
17	F-3	Q127	E-6		
22	D-2	Q128	E-6		
23	D-1	Q129	D-6		
24	E-3	Q131	D-6		
25	F-2	Q184	F-5		
02	C-3	Q201	D-4		
05	D-2	Q206	D-4		
02	C-5	Q214	C-6		
2	A-5	Q217	D-5		
3	B-5	Q218	D-6		
4	C-5	Q301	E-1		
5	C-4	Q302	G-1		
7	B-6	Q305	G-1		
8	C-6	Q309	F-1		
1	G-2	Q310	F-2		
1	H-4	Q311	F-2		
2	G-6	Q312	F-3		
3	F-5	Q313	F-3		
		Q314	F-2		
		Q318	F-1		
		Q319	E-1		
		Q320	E-1		
		Q321	E-2		
		Q326	F-3		
		Q328	F-2		
		Q401	C-3		
		Q403	D-3		
		Q404	D-3		
		Q406	E-2		
		Q407	C-2		
		Q408	D-3		
		Q409	D-3		
		Q410	D-3		
		Q411	D-3		
		Q412	E-2		
		Q415	D-2		
		Q416	D-2		
		Q418	D-1		
		Q419	D-2		
		Q420	D-1		
		Q421	C-1		
		Q424	C-2		
		Q425	E-3		
		Q428	C-3		
		Q429	C-3		
		Q430	C-4		
		Q431	C-3		
		Q501	C-1		
		Q502	C-1		
		Q503	B-1		
		Q601	B-4		
		Q606	C-4		

HK-4 BOARD (COMPONENT SIDE)

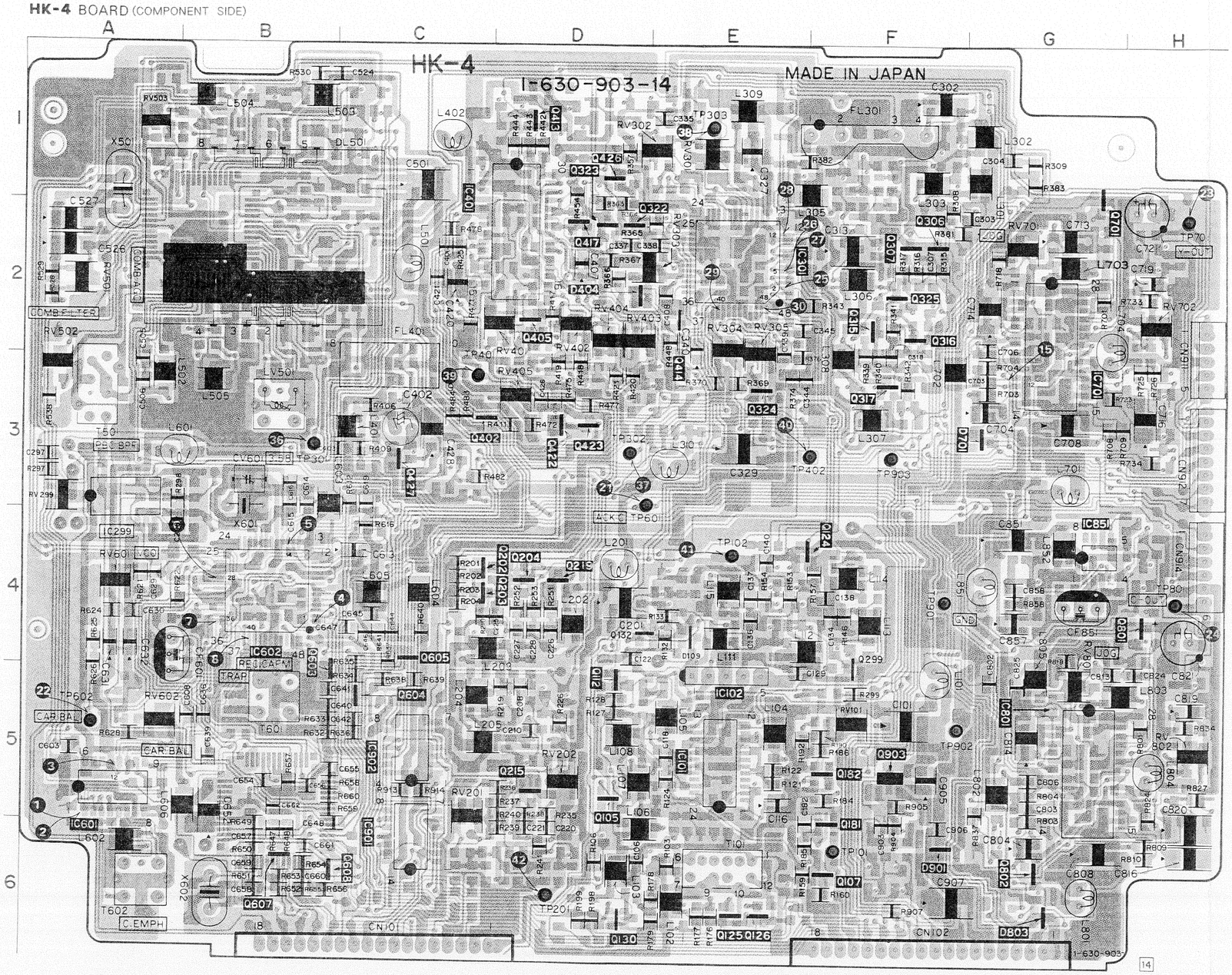

HK-4 BOARD (CONDUCTOR SIDE)

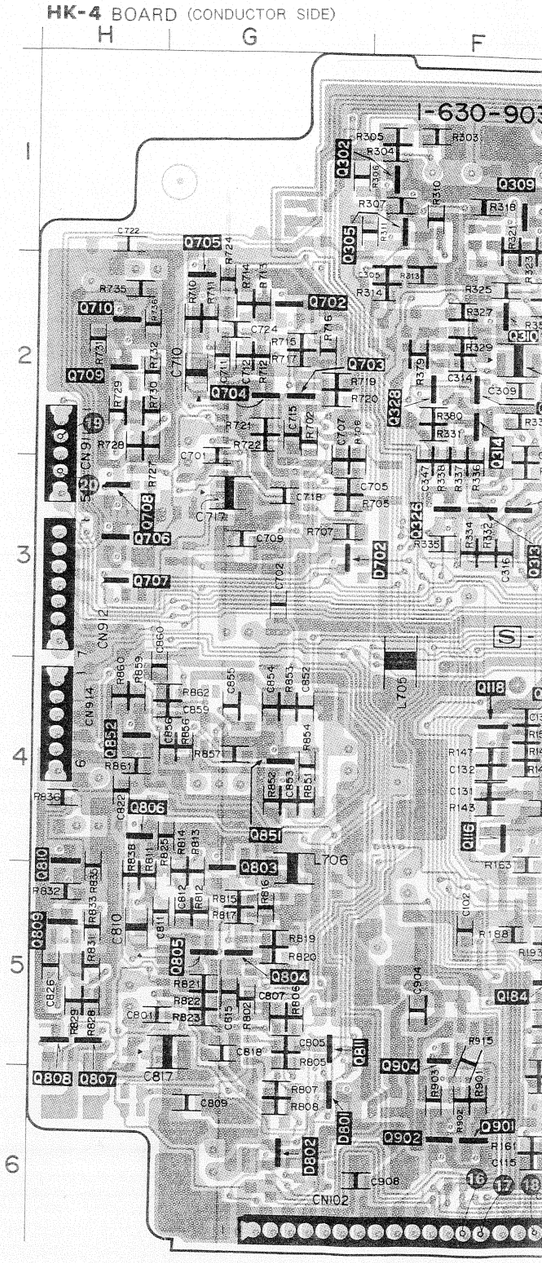

4 BOARD (CONDUCTOR SIDE)

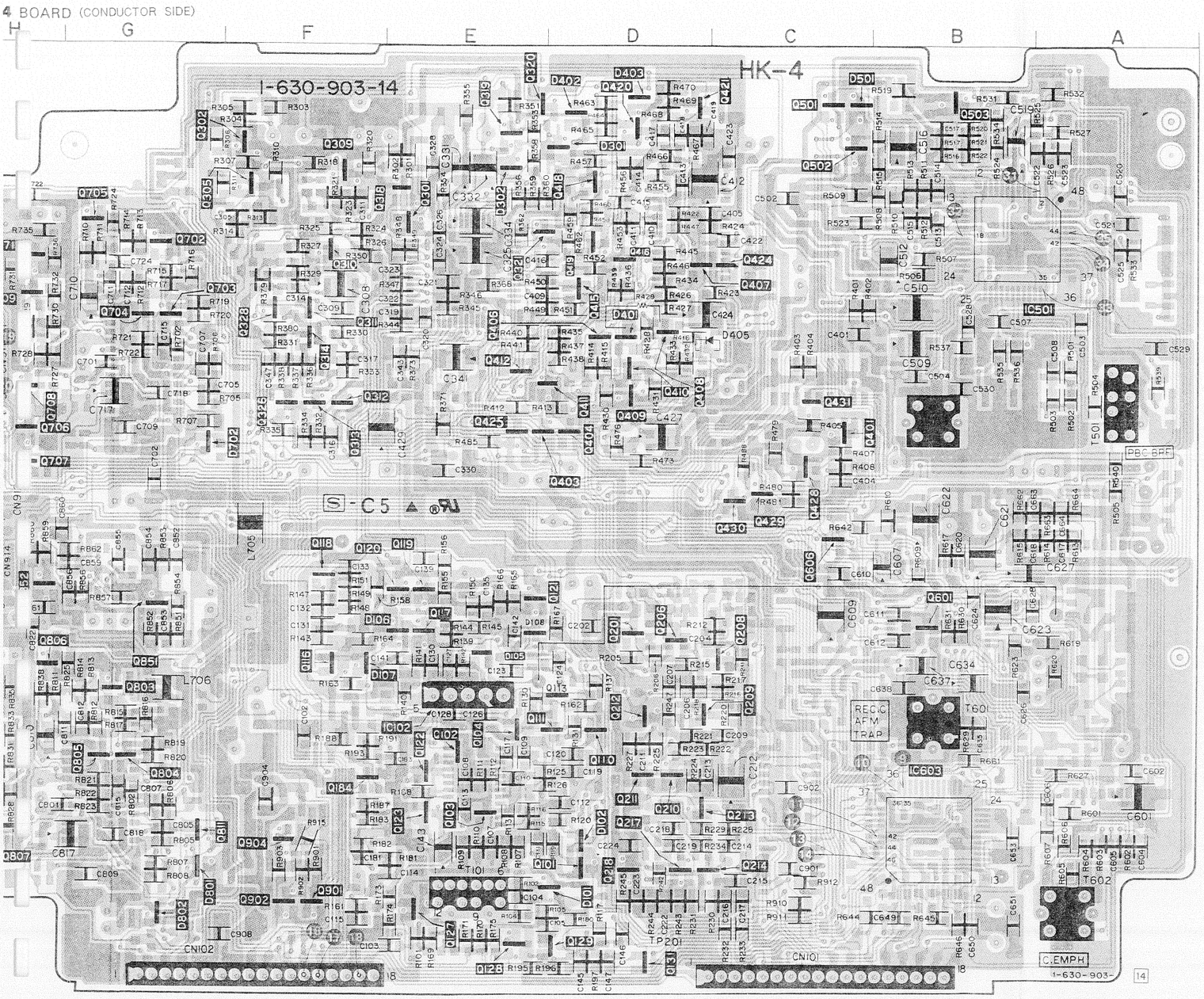

* A-7061-820-A HK-4 BOARD, COMPLETE

****

〈 DIODE 〉

D101	8-719-400-18 DIODE MA152WK	
D102	8-719-400-18 DIODE MA152WK	
D105	8-719-800-76 DIODE 1SS226	
D106	8-719-400-18 DIODE MA152WK	
D107	8-719-400-18 DIODE MA152WK	
D108	8-719-400-18 DIODE MA152WK	
D109	8-719-400-18 DIODE MA152WK	
D301	8-719-400-18 DIODE MA152WK	
D302	8-719-400-18 DIODE MA152WK	
D401	8-719-400-18 DIODE MA152WK	
D402	8-719-400-18 DIODE MA152WK	
D403	8-719-400-18 DIODE MA152WK	
D404	8-719-400-18 DIODE MA152WK	
D405	8-719-400-18 DIODE MA152WK	
D501	8-719-400-18 DIODE MA152WK	
D701	8-719-104-34 DIODE 1S2836	
D702	8-719-400-18 DIODE 1S2837	
D801	8-719-400-18 DIODE 1S2837	
D802	8-719-400-18 DIODE 1S2837	
D803	8-719-104-34 DIODE 1S2836	
D901	8-719-400-18 DIODE MA152WK	

〈 IC 〉

IC101	8-759-233-94 IC TA8607F	
IC102	8-759-925-60 IC BA401	
IC299	8-759-239-58 IC TC74HC221AF	
IC301	8-752-002-XX IC CX20030	
IC401	8-752-031-01 IC CXA1047M	
IC501	8-752-003-12 IC CX20031	
IC601	8-752-202-10 IC CX22021	
IC602	8-752-003-22 IC CX20032	
IC603	8-759-914-56 IC CX23054	
IC701	8-752-322-24 IC CXL1008M	
IC801	8-752-322-24 IC CXL1008M	
IC851	8-759-710-05 IC NJM2238M	
IC901	8-759-925-74 IC TC74HC04AF	
IC902	8-759-925-74 IC TC74HC04AF	

〈 TRANSISTOR 〉

Q101	8-729-102-07 TRANSISTOR 2SC2223	
Q102	8-729-901-04 TRANSISTOR DTA114EK	
Q103	8-729-102-07 TRANSISTOR 2SC2223	
Q104	8-729-901-01 TRANSISTOR DTC144EK	
Q105	8-729-904-07 TRANSISTOR FMG2-T-148	
Q107	8-729-100-66 TRANSISTOR 2SC1623	
Q110	8-729-901-01 TRANSISTOR DTC144EK	
Q111	8-729-102-07 TRANSISTOR 2SC2223	
Q112	8-729-901-01 TRANSISTOR DTC144EK	
Q113	8-729-102-07 TRANSISTOR 2SC2223	
Q116	8-729-102-07 TRANSISTOR 2SC2223	
Q117	8-729-102-07 TRANSISTOR 2SC2223	
Q118	8-729-102-07 TRANSISTOR 2SC2223	
Q119	8-729-102-07 TRANSISTOR 2SC2223	
Q120	8-729-102-07 TRANSISTOR 2SC2223	
Q121	8-729-100-66 TRANSISTOR 2SC1623	
Q122	8-729-901-01 TRANSISTOR DTC144EK	
Q123	8-729-901-01 TRANSISTOR DTC144EK	
Q124	8-729-901-06 TRANSISTOR DTA144EK	
Q125	8-729-901-01 TRANSISTOR DTC144EK	
Q126	8-729-100-66 TRANSISTOR 2SC1623	
Q127	8-729-100-66 TRANSISTOR 2SC1623	
Q128	8-729-102-07 TRANSISTOR 2SC2223	
Q129	8-729-100-66 TRANSISTOR 2SC1623	
Q130	8-729-907-26 TRANSISTOR IMX1	
Q131	8-729-320-17 TRANSISTOR 2SA1122CD	
Q132	8-729-202-38 TRANSISTOR 2SC3326N	
Q181	8-729-907-46 TRANSISTOR IMZ1	
Q182	8-729-903-10 TRANSISTOR FMW1	
Q184	8-729-320-17 TRANSISTOR 2SA1122CD	
Q201	8-729-102-07 TRANSISTOR 2SC2223	
Q202	8-729-202-38 TRANSISTOR 2SC3326N	
Q203	8-729-202-38 TRANSISTOR 2SC3326N	
Q204	8-729-904-07 TRANSISTOR FMG2	
Q206	8-729-122-63 TRANSISTOR 2SA1226	
Q207	8-729-202-38 TRANSISTOR 2SC3326N	
Q208	8-729-201-27 TRANSISTOR 2SC2715	
Q209	8-729-201-27 TRANSISTOR 2SC2715	
Q210	8-729-102-07 TRANSISTOR 2SC2223	
Q211	8-729-102-07 TRANSISTOR 2SC2223	
Q212	8-729-901-01 TRANSISTOR DTC144EK	
Q213	8-729-901-06 TRANSISTOR DTA144EK	
Q214	8-729-102-07 TRANSISTOR 2SC2223	
Q215	8-729-902-96 TRANSISTOR FMS1	
Q217	8-729-102-07 TRANSISTOR 2SC2223	
Q218	8-729-102-07 TRANSISTOR 2SC2223	
Q219	8-729-901-01 TRANSISTOR DTC144EK	
Q299	8-729-901-06 TRANSISTOR DTA144EK	
Q301	8-729-100-66 TRANSISTOR 2SC1623	
Q302	8-729-100-66 TRANSISTOR 2SC1623	
Q305	8-729-100-66 TRANSISTOR 2SC1623	
Q306	8-729-100-66 TRANSISTOR 2SC1623	
Q307	8-729-100-66 TRANSISTOR 2SC1623	
Q309	8-729-100-66 TRANSISTOR 2SC1623	
Q310	8-729-100-66 TRANSISTOR 2SC1623	
Q311	8-729-100-66 TRANSISTOR 2SC1623	
Q312	8-729-901-06 TRANSISTOR DTA144EK	
Q313	8-729-320-17 TRANSISTOR 2SA1122CD	
Q314	8-729-100-66 TRANSISTOR 2SC1623	
Q315	8-729-100-66 TRANSISTOR 2SC1623	
Q316	8-729-901-01 TRANSISTOR DTC144EK	
Q317	8-729-100-66 TRANSISTOR 2SC1623	
Q318	8-729-901-06 TRANSISTOR DTA144EK	
Q319	8-729-100-66 TRANSISTOR 2SC1623	
Q320	8-729-901-01 TRANSISTOR DTC144EK	
Q321		
Q322		
Q323		
Q324		
Q325		
Q326		
Q328		
Q401		
Q402		
Q403		
Q404		
Q405		
Q406		
Q407		
Q408		
Q409		
Q410		
Q411		
Q412		
Q413		
Q414		
Q415		
Q416		
Q417		
Q418		
Q419		
Q420		
Q421		
Q422		
Q423		
Q424		
Q425		
Q426		
Q427		
Q428		
Q429		
Q430		
Q431		
Q501		
Q502		
Q503		
Q601		
Q602		
Q603		
Q604		
Q605		
Q606		
Q607		
Q608		
Q701		
Q702		
Q703		
Q704		
Q705		
Q706		
Q707		

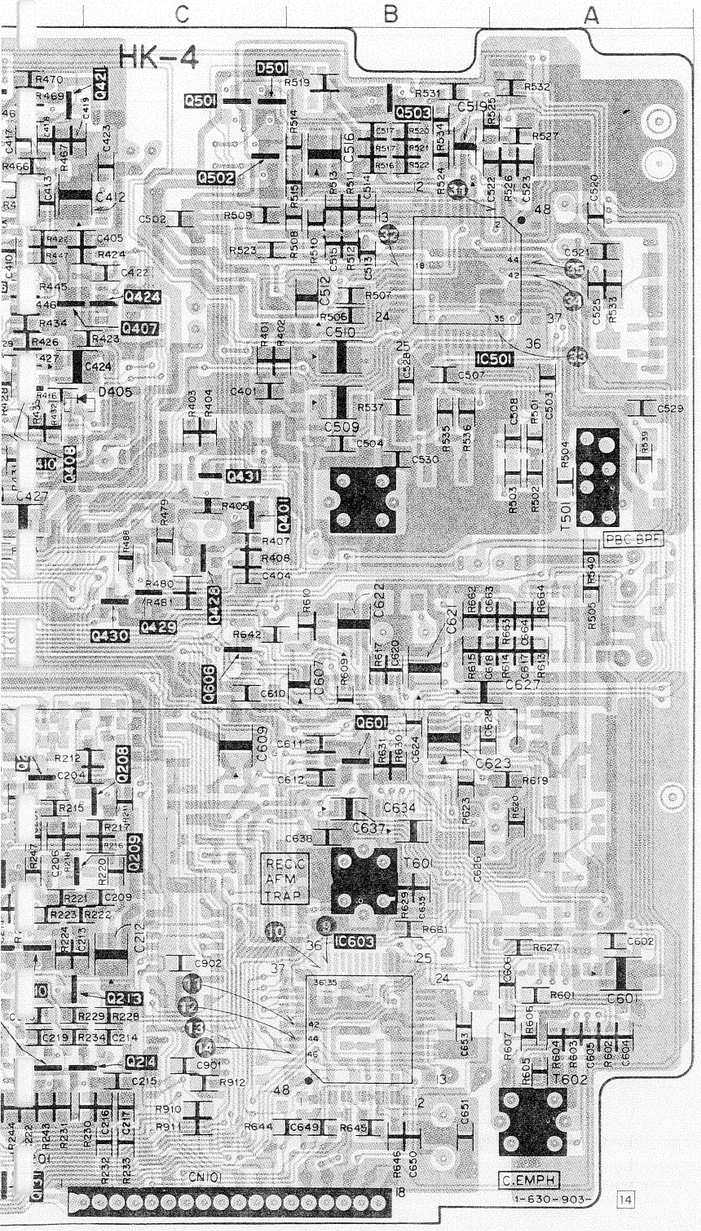

* A-7061-820-A HK-4 BOARD, COMPLETE
****

〈 DIODE 〉

D101	8-719-400-18	DIODE MA152WK
D102	8-719-400-18	DIODE MA152WK
D105	8-719-800-76	DIODE 1SS226
D106	8-719-400-18	DIODE MA152WK
D107	8-719-400-18	DIODE MA152WK
D108	8-719-400-18	DIODE MA152WK
D109	8-719-400-18	DIODE MA152WK
D301	8-719-400-18	DIODE MA152WK
D302	8-719-400-18	DIODE MA152WK
D401	8-719-400-18	DIODE MA152WK
D402	8-719-400-18	DIODE MA152WK
D403	8-719-400-18	DIODE MA152WK
D404	8-719-400-18	DIODE MA152WK
D405	8-719-400-18	DIODE MA152WK
D501	8-719-400-18	DIODE MA152WK
D701	8-719-104-34	DIODE 1S2836
D702	8-719-400-18	DIODE 1S2837
D801	8-719-400-18	DIODE 1S2837
D802	8-719-400-18	DIODE 1S2837
D803	8-719-104-34	DIODE 1S2836
D901	8-719-400-18	DIODE MA152WK

〈 IC 〉

IC101	8-759-233-94	IC TA8607F
IC102	8-759-925-60	IC BA401
IC299	8-759-239-58	IC TC74HC221AF
IC301	8-752-002-XX	IC CX20030
IC401	8-752-031-01	IC CXA1047M
IC501	8-752-003-12	IC CX20031
IC601	8-752-202-10	IC CX22021
IC602	8-752-003-22	IC CX20032
IC603	8-759-914-56	IC CX23054
IC701	8-752-322-24	IC CXL1008M
IC801	8-752-322-24	IC CXL1008M
IC851	8-759-710-05	IC NJM2238M
IC901	8-759-925-74	IC TC74HC04AF
IC902	8-759-925-74	IC TC74HC04AF

〈 TRANSISTOR 〉

Q101	8-729-102-07	TRANSISTOR 2SC2223
Q102	8-729-901-04	TRANSISTOR DTA114EK
Q103	8-729-102-07	TRANSISTOR 2SC2223
Q104	8-729-901-01	TRANSISTOR DTC144EK
Q105	8-729-904-07	TRANSISTOR FMG2-T-148
Q107	8-729-100-66	TRANSISTOR 2SC1623
Q110	8-729-901-01	TRANSISTOR DTC144EK
Q111	8-729-102-07	TRANSISTOR 2SC2223
Q112	8-729-901-01	TRANSISTOR DTC144EK
Q113	8-729-102-07	TRANSISTOR 2SC2223
Q116	8-729-102-07	TRANSISTOR 2SC2223
Q117	8-729-102-07	TRANSISTOR 2SC2223
Q118	8-729-102-07	TRANSISTOR 2SC2223
Q119	8-729-102-07	TRANSISTOR 2SC2223
Q120	8-729-102-07	TRANSISTOR 2SC2223
Q121	8-729-100-66	TRANSISTOR 2SC1623
Q122	8-729-901-01	TRANSISTOR DTC144EK
Q123	8-729-901-01	TRANSISTOR DTC144EK
Q124	8-729-901-06	TRANSISTOR DTA144EK
Q125	8-729-901-01	TRANSISTOR DTC144EK
Q126	8-729-100-66	TRANSISTOR 2SC1623
Q127	8-729-100-66	TRANSISTOR 2SC1623
Q128	8-729-102-07	TRANSISTOR 2SC2223
Q129	8-729-100-66	TRANSISTOR 2SC1623
Q130	8-729-907-26	TRANSISTOR IMX1
Q131	8-729-320-17	TRANSISTOR 2SA1122CD
Q132	8-729-202-38	TRANSISTOR 2SC3326N
Q181	8-729-907-46	TRANSISTOR IMZ1
Q182	8-729-903-10	TRANSISTOR FMW1
Q184	8-729-320-17	TRANSISTOR 2SA1122CD
Q201	8-729-102-07	TRANSISTOR 2SC2223
Q202	8-729-202-38	TRANSISTOR 2SC3326N
Q203	8-729-202-38	TRANSISTOR 2SC3326N
Q204	8-729-904-07	TRANSISTOR FMG2
Q206	8-729-122-63	TRANSISTOR 2SA1226
Q207	8-729-202-38	TRANSISTOR 2SC3326N
Q208	8-729-201-27	TRANSISTOR 2SC2715
Q209	8-729-201-27	TRANSISTOR 2SC2715
Q210	8-729-102-07	TRANSISTOR 2SC2223
Q211	8-729-102-07	TRANSISTOR 2SC2223
Q212	8-729-901-01	TRANSISTOR DTC144EK
Q213	8-729-901-06	TRANSISTOR DTA144EK
Q214	8-729-102-07	TRANSISTOR 2SC2223
Q215	8-729-902-96	TRANSISTOR FMS1
Q217	8-729-102-07	TRANSISTOR 2SC2223
Q218	8-729-102-07	TRANSISTOR 2SC2223
Q219	8-729-901-01	TRANSISTOR DTC144EK
Q299	8-729-901-06	TRANSISTOR DTA144EK
Q301	8-729-100-66	TRANSISTOR 2SC1623
Q302	8-729-100-66	TRANSISTOR 2SC1623
Q305	8-729-100-66	TRANSISTOR 2SC1623
Q306	8-729-100-66	TRANSISTOR 2SC1623
Q307	8-729-100-66	TRANSISTOR 2SC1623
Q309	8-729-100-66	TRANSISTOR 2SC1623
Q310	8-729-100-66	TRANSISTOR 2SC1623
Q311	8-729-100-66	TRANSISTOR 2SC1623
Q312	8-729-901-06	TRANSISTOR DTA144EK
Q313	8-729-320-17	TRANSISTOR 2SA1122CD
Q314	8-729-100-66	TRANSISTOR 2SC1623
Q315	8-729-100-66	TRANSISTOR 2SC1623
Q316	8-729-901-01	TRANSISTOR DTC144EK
Q317	8-729-100-66	TRANSISTOR 2SC1623
Q318	8-729-901-06	TRANSISTOR DTA144EK
Q319	8-729-100-66	TRANSISTOR 2SC1623
Q320	8-729-901-01	TRANSISTOR DTC144EK
Q321	8-729-901-01	TRANSISTOR DTC144EK
Q322	8-729-320-17	TRANSISTOR 2SA1122CD
Q323	8-729-901-01	TRANSISTOR DTC144EK
Q324	8-729-901-01	TRANSISTOR DTC144EK
Q325	8-729-901-06	TRANSISTOR DTA144EK
Q326	8-729-901-06	TRANSISTOR DTA144EK
Q328	8-729-100-66	TRANSISTOR 2SC1623
Q401	8-729-100-66	TRANSISTOR 2SC1623
Q402	8-729-100-66	TRANSISTOR 2SC1623
Q403	8-729-901-01	TRANSISTOR DTC144EK
Q404	8-729-901-01	TRANSISTOR DTC144EK
Q405	8-729-901-06	TRANSISTOR DTA144EK
Q406	8-729-100-66	TRANSISTOR 2SC1623
Q407	8-729-320-17	TRANSISTOR 2SA1122CD
Q408	8-729-320-17	TRANSISTOR 2SA1122CD
Q409	8-729-100-66	TRANSISTOR 2SC1623
Q410	8-729-320-17	TRANSISTOR 2SA1122CD
Q411	8-729-901-01	TRANSISTOR DTC144EK
Q412	8-729-901-01	TRANSISTOR DTC144EK
Q413	8-729-901-01	TRANSISTOR DTC144EK
Q414	8-729-100-66	TRANSISTOR 2SC1623
Q415	8-729-320-17	TRANSISTOR 2SA1122CD
Q416	8-729-320-17	TRANSISTOR 2SA1122CD
Q417	8-729-901-01	TRANSISTOR DTC144EK
Q418	8-729-100-66	TRANSISTOR 2SC1623
Q419	8-729-100-66	TRANSISTOR 2SC1623
Q420	8-729-202-38	TRANSISTOR 2SC3326N
Q421	8-729-202-38	TRANSISTOR 2SC3326N
Q422	8-729-100-66	TRANSISTOR 2SC1623
Q423	8-729-100-66	TRANSISTOR 2SC1623
Q424	8-729-901-01	TRANSISTOR DTC144EK
Q425	8-729-100-66	TRANSISTOR 2SC1623
Q426	8-729-100-66	TRANSISTOR 2SC1623
Q427	8-729-320-17	TRANSISTOR 2SA1122CD
Q428	8-729-320-17	TRANSISTOR 2SA1122CD
Q429	8-729-901-01	TRANSISTOR DTC144EK
Q430	8-729-901-01	TRANSISTOR DTC144EK
Q431	8-729-320-17	TRANSISTOR 2SA1122CD
Q501	8-729-901-06	TRANSISTOR DTA144EK
Q502	8-729-901-01	TRANSISTOR DTC144EK
Q503	8-729-901-00	TRANSISTOR DTC124EK
Q601	8-729-901-01	TRANSISTOR DTC144EK
Q603	8-729-901-01	TRANSISTOR DTC144EK
Q604	8-729-100-66	TRANSISTOR 2SC1623
Q605	8-729-100-66	TRANSISTOR 2SC1623
Q606	8-729-901-01	TRANSISTOR DTC144EK
Q607	8-729-100-66	TRANSISTOR 2SC1623
Q608	8-729-320-17	TRANSISTOR 2SA1122CD
Q701	8-729-901-01	TRANSISTOR DTC144EK
Q702	8-729-216-22	TRANSISTOR 2SA1162
Q703	8-729-216-22	TRANSISTOR 2SA1162
Q704	8-729-216-22	TRANSISTOR 2SA1162
Q705	8-729-320-17	TRANSISTOR 2SA1122CD
Q706	8-729-901-01	TRANSISTOR DTC144EK
Q707	8-729-901-01	TRANSISTOR DTC144EK
Q708	8-729-216-22	TRANSISTOR 2SA1162
Q709	8-729-216-22	TRANSISTOR 2SA1162
Q710	8-729-320-17	TRANSISTOR 2SA1122CD
Q801	8-729-901-01	TRANSISTOR DTC144EK
Q802	8-729-320-17	TRANSISTOR 2SA1122CD
Q803	8-729-216-22	TRANSISTOR 2SA1162
Q804	8-729-216-22	TRANSISTOR 2SA1162
Q805	8-729-216-22	TRANSISTOR 2SA1162
Q806	8-729-320-17	TRANSISTOR 2SA1122CD
Q807	8-729-901-01	TRANSISTOR DTC144EK
Q808	8-729-216-22	TRANSISTOR 2SA1162
Q809	8-729-216-22	TRANSISTOR 2SA1162
Q810	8-729-320-17	TRANSISTOR 2SA1122CD
Q811	8-729-901-01	TRANSISTOR DTC144EK
Q851	8-729-100-66	TRANSISTOR 2SC1623
Q852	8-729-100-66	TRANSISTOR 2SC1623
Q901	8-729-901-00	TRANSISTOR DTC124EK
Q902	8-729-901-01	TRANSISTOR DTC144EK
Q903	8-729-104-25	TRANSISTOR 2SB804-AV
Q904	8-729-100-66	TRANSISTOR 2SC1623

* A-7061-820-A HK-4 BOARD, COMPLETE
****

〈 DIODE 〉

D101 8-719-400-18 DIODE MA152WK
D102 8-719-400-18 DIODE MA152WK
D105 8-719-800-76 DIODE 1SS226
D106 8-719-400-18 DIODE MA152WK
D107 8-719-400-18 DIODE MA152WK

D108 8-719-400-18 DIODE MA152WK
D109 8-719-400-18 DIODE MA152WK
D301 8-719-400-18 DIODE MA152WK
D302 8-719-400-18 DIODE MA152WK
D401 8-719-400-18 DIODE MA152WK

D402 8-719-400-18 DIODE MA152WK
D403 8-719-400-18 DIODE MA152WK
D404 8-719-400-18 DIODE MA152WK
D405 8-719-400-18 DIODE MA152WK
D501 8-719-400-18 DIODE MA152WK

D701 8-719-104-34 DIODE 1S2836
D702 8-719-400-18 DIODE 1S2837
D801 8-719-400-18 DIODE 1S2837
D802 8-719-400-18 DIODE 1S2837
D803 8-719-104-34 DIODE 1S2836

D901 8-719-400-18 DIODE MA152WK

〈 IC 〉

IC101 8-759-233-94 IC TA8607F
IC102 8-759-925-60 IC BA401
IC299 8-759-239-58 IC TC74HC221AF
IC301 8-752-002-XX IC CX20030
IC401 8-752-031-01 IC CXA1047M

IC501 8-752-003-12 IC CX20031
IC601 8-752-202-10 IC CX22021
IC602 8-752-003-22 IC CX20032
IC603 8-759-914-56 IC CX23054
IC701 8-752-322-24 IC CXL1008M

IC801 8-752-322-24 IC CXL1008M
IC851 8-759-710-05 IC NJW2238M
IC901 8-759-925-74 IC TC74HC04AF
IC902 8-759-925-74 IC TC74HC04AF

〈 TRANSISTOR 〉

Q101 8-729-102-07 TRANSISTOR 2SC2223
Q102 8-729-901-04 TRANSISTOR DTA114EK
Q103 8-729-102-07 TRANSISTOR 2SC2223
Q104 8-729-901-01 TRANSISTOR DTC144EK
Q105 8-729-904-07 TRANSISTOR FMG2-T-148

Q107 8-729-100-66 TRANSISTOR 2SC1623
Q110 8-729-901-01 TRANSISTOR DTC144EK
Q111 8-729-102-07 TRANSISTOR 2SC2223
Q112 8-729-901-01 TRANSISTOR DTC144EK
Q113 8-729-102-07 TRANSISTOR 2SC2223

Q116 8-729-102-07 TRANSISTOR 2SC2223
Q117 8-729-102-07 TRANSISTOR 2SC2223
Q118 8-729-102-07 TRANSISTOR 2SC2223
Q119 8-729-102-07 TRANSISTOR 2SC2223
Q120 8-729-102-07 TRANSISTOR 2SC2223

Q121 8-729-100-66 TRANSISTOR 2SC1623
Q122 8-729-901-01 TRANSISTOR DTC144EK
Q123 8-729-901-01 TRANSISTOR DTC144EK
Q124 8-729-901-06 TRANSISTOR DTA144EK
Q125 8-729-901-01 TRANSISTOR DTC144EK

Q126 8-729-100-66 TRANSISTOR 2SC1623
Q127 8-729-100-66 TRANSISTOR 2SC1623
Q128 8-729-102-07 TRANSISTOR 2SC2223
Q129 8-729-100-66 TRANSISTOR 2SC1623
Q130 8-729-907-26 TRANSISTOR IMX1

Q131 8-729-320-17 TRANSISTOR 2SA1122CD
Q132 8-729-202-38 TRANSISTOR 2SC3326N
Q181 8-729-907-46 TRANSISTOR IMZ1
Q182 8-729-903-10 TRANSISTOR FMW1
Q184 8-729-320-17 TRANSISTOR 2SA1122CD

Q201 8-729-102-07 TRANSISTOR 2SC2223
Q202 8-729-202-38 TRANSISTOR 2SC3326N
Q203 8-729-202-38 TRANSISTOR 2SC3326N
Q204 8-729-904-07 TRANSISTOR FMG2
Q206 8-729-122-63 TRANSISTOR 2SA1226

Q207 8-729-202-38 TRANSISTOR 2SC3326N
Q208 8-729-201-27 TRANSISTOR 2SC2715
Q209 8-729-201-27 TRANSISTOR 2SC2715
Q210 8-729-102-07 TRANSISTOR 2SC2223
Q211 8-729-102-07 TRANSISTOR 2SC2223

Q212 8-729-901-01 TRANSISTOR DTC144EK
Q213 8-729-901-06 TRANSISTOR DTA144EK
Q214 8-729-102-07 TRANSISTOR 2SC2223
Q215 8-729-902-96 TRANSISTOR FMS1
Q217 8-729-102-07 TRANSISTOR 2SC2223

Q218 8-729-102-07 TRANSISTOR 2SC2223
Q219 8-729-901-01 TRANSISTOR DTC144EK
Q299 8-729-901-06 TRANSISTOR DTA144EK
Q301 8-729-100-66 TRANSISTOR 2SC1623
Q302 8-729-100-66 TRANSISTOR 2SC1623

Q305 8-729-100-66 TRANSISTOR 2SC1623
Q306 8-729-100-66 TRANSISTOR 2SC1623
Q307 8-729-100-66 TRANSISTOR 2SC1623
Q309 8-729-100-66 TRANSISTOR 2SC1623
Q310 8-729-100-66 TRANSISTOR 2SC1623

Q311 8-729-100-66 TRANSISTOR 2SC1623
Q312 8-729-901-06 TRANSISTOR DTA144EK
Q313 8-729-320-17 TRANSISTOR 2SA1122CD
Q314 8-729-100-66 TRANSISTOR 2SC1623
Q315 8-729-100-66 TRANSISTOR 2SC1623

Q316 8-729-901-01 TRANSISTOR DTC144EK
Q317 8-729-100-66 TRANSISTOR 2SC1623
Q318 8-729-901-06 TRANSISTOR DTA144EK
Q319 8-729-100-66 TRANSISTOR 2SC1623
Q320 8-729-901-01 TRANSISTOR DTC144EK

Q321 8-729-901-01 TRANSISTOR DTC144EK
Q322 8-729-320-17 TRANSISTOR 2SA1122CD
Q323 8-729-901-01 TRANSISTOR DTC144EK
Q324 8-729-901-01 TRANSISTOR DTC144EK
Q325 8-729-901-06 TRANSISTOR DTA144EK

Q326 8-729-901-06 TRANSISTOR DTA144EK
Q328 8-729-100-66 TRANSISTOR 2SC1623
Q401 8-729-100-66 TRANSISTOR 2SC1623
Q402 8-729-100-66 TRANSISTOR 2SC1623
Q403 8-729-901-01 TRANSISTOR DTC144EK

Q404 8-729-901-01 TRANSISTOR DTC144EK
Q405 8-729-901-06 TRANSISTOR DTA144EK
Q406 8-729-100-66 TRANSISTOR 2SC1623
Q407 8-729-320-17 TRANSISTOR 2SA1122CD
Q408 8-729-320-17 TRANSISTOR 2SA1122CD

Q409 8-729-100-66 TRANSISTOR 2SC1623
Q410 8-729-320-17 TRANSISTOR 2SA1122CD
Q411 8-729-901-01 TRANSISTOR DTC144EK
Q412 8-729-901-01 TRANSISTOR DTC144EK
Q413 8-729-901-01 TRANSISTOR DTC144EK

Q414 8-729-100-66 TRANSISTOR 2SC1623
Q415 8-729-320-17 TRANSISTOR 2SA1122CD
Q416 8-729-320-17 TRANSISTOR 2SA1122CD
Q417 8-729-901-01 TRANSISTOR DTC144EK
Q418 8-729-100-66 TRANSISTOR 2SC1623

Q419 8-729-100-66 TRANSISTOR 2SC1623
Q420 8-729-202-38 TRANSISTOR 2SC3326N
Q421 8-729-202-38 TRANSISTOR 2SC3326N
Q422 8-729-100-66 TRANSISTOR 2SC1623
Q423 8-729-100-66 TRANSISTOR 2SC1623

Q424 8-729-901-01 TRANSISTOR DTC144EK
Q425 8-729-100-66 TRANSISTOR 2SC1623
Q426 8-729-100-66 TRANSISTOR 2SC1623
Q427 8-729-320-17 TRANSISTOR 2SA1122CD
Q428 8-729-320-17 TRANSISTOR 2SA1122CD

Q429 8-729-901-01 TRANSISTOR DTC144EK
Q430 8-729-901-01 TRANSISTOR DTC144EK
Q431 8-729-320-17 TRANSISTOR 2SA1122CD
Q501 8-729-901-06 TRANSISTOR DTA144EK
Q502 8-729-901-01 TRANSISTOR DTC144EK

Q503 8-729-901-00 TRANSISTOR DTC124EK
Q601 8-729-901-01 TRANSISTOR DTC144EK
Q603 8-729-901-01 TRANSISTOR DTC144EK
Q604 8-729-100-66 TRANSISTOR 2SC1623
Q605 8-729-100-66 TRANSISTOR 2SC1623

Q606 8-729-901-01 TRANSISTOR DTC144EK
Q607 8-729-100-66 TRANSISTOR 2SC1623
Q608 8-729-320-17 TRANSISTOR 2SA1122CD
Q701 8-729-901-01 TRANSISTOR DTC144EK
Q702 8-729-216-22 TRANSISTOR 2SA1162

Q703 8-729-216-22 TRANSISTOR 2SA1162
Q704 8-729-216-22 TRANSISTOR 2SA1162
Q705 8-729-320-17 TRANSISTOR 2SA1122CD
Q706 8-729-901-01 TRANSISTOR DTC144EK
Q707 8-729-901-01 TRANSISTOR DTC144EK

Q708 8-729-216-22 TRANSISTOR 2SA1162
Q709 8-729-216-22 TRANSISTOR 2SA1162
Q710 8-729-320-17 TRANSISTOR 2SA1122CD
Q801 8-729-901-01 TRANSISTOR DTC144EK
Q802 8-729-320-17 TRANSISTOR 2SA1122CD

Q803 8-729-216-22 TRANSISTOR 2SA1162
Q804 8-729-216-22 TRANSISTOR 2SA1162
Q805 8-729-216-22 TRANSISTOR 2SA1162
Q806 8-729-320-17 TRANSISTOR 2SA1122CD
Q807 8-729-901-01 TRANSISTOR DTC144EK

Q808 8-729-216-22 TRANSISTOR 2SA1162
Q809 8-729-216-22 TRANSISTOR 2SA1162
Q810 8-729-320-17 TRANSISTOR 2SA1122CD
Q811 8-729-901-01 TRANSISTOR DTC144EK
Q851 8-729-100-66 TRANSISTOR 2SC1623

Q852 8-729-100-66 TRANSISTOR 2SC1623
Q901 8-729-901-00 TRANSISTOR DTC124EK
Q902 8-729-901-01 TRANSISTOR DTC144EK
Q903 8-729-104-25 TRANSISTOR 2SB804-AV
Q904 8-729-100-66 TRANSISTOR 2SC1623

HK-4 (C VIDEO PROCESS, Y VIDEO PROCESS, Y/C/AFM MIX) PRINTED WIRING B

— Ref. No. HK-4 BOARD: 4000 series —

HK-4 BOARD (COMPONENT SIDE)

D404 D-2
D701 G-3
D803 G-6
D901 F-6

IC101 E-5
IC102 E-5
IC301 E-2
IC401 C-1
IC601 A-5
IC602 B-4
IC701 G-3
IC801 G-5
IC851 G-4
IC901 C-6
IC902 C-5

Q105 D-5
Q107 F-6
Q112 D-5
Q124 F-4
Q125 E-6
Q126 E-6
Q130 D-6
Q181 F-6
Q182 F-5
Q202 D-4
Q203 D-4
Q204 D-4
Q215 D-5
Q219 D-4
Q306 F-2
Q307 F-2
Q315 F-2
Q316 F-2
Q317 F-3
Q322 D-2
Q323 D-1
Q324 E-3
Q325 F-2
Q402 C-3
Q405 D-2
Q413 D-1
Q414 E-3
Q417 D-2
Q422 D-3
Q423 D-3
Q426 D-1
Q427 C-3
Q602 A-5
Q603 B-5
Q604 C-5
Q605 C-4
Q607 B-6
Q608 C-6
Q701 G-2
Q801 H-4
Q802 G-6
Q903 F-5

HK-4 BOARD (CONDUCTOR SIDE)

D101 D-6
D102 D-5
D105 E-4
D106 F-4
D107 F-4
D108 D-4
D301 D-1
D302 E-1
D401 D-2
D402 D-1
D403 D-1
D405 D-2
D501 C-1
D702 F-3
D801 G-6
D802 G-6

IC501 B-2
IC603 B-5

Q101 E-6
Q102 E-5
Q103 E-5
Q104 E-5
Q110 D-5
Q111 E-5
Q113 E-4
Q116 F-4
Q117 E-4
Q118 F-4
Q119 E-4
Q120 F-4
Q121 D-4
Q122 E-5
Q123 E-5
Q127 E-6
Q128 E-6
Q129 D-6
Q131 D-6
Q184 F-5
Q201 D-4
Q206 D-4
Q207 C-4
Q208 C-4
Q209 C-5
Q210 D-5
Q211 D-5
Q212 D-5
Q213 C-5
Q214 C-6
Q217 D-5
Q218 D-6
Q301 E-1
Q302 G-1
Q305 G-1
Q309 F-1
Q310 F-2
Q311 F-2
Q312 F-3
Q313 F-3
Q314 F-2
Q318 F-1
Q319 E-1
Q320 E-1
Q321 E-2
Q326 F-3
Q328 F-2
Q401 C-3
Q403 D-3
Q404 D-3
Q406 E-2
Q407 C-2
Q408 D-3
Q409 D-3
Q410 D-3
Q411 D-3
Q412 E-2
Q415 D-2
Q416 D-2
Q418 D-1
Q419 D-2
Q420 D-1
Q421 C-1
Q424 C-2
Q425 E-3
Q428 C-3
Q429 C-3
Q430 C-4
Q431 C-3
Q501 C-1
Q502 C-1
Q503 B-1
Q601 B-4
Q606 C-4

Q702 G-2
Q703 G-2
Q704 G-2
Q705 G-1
Q706 H-3
Q707 H-3
Q708 H-3
Q709 H-2
Q710 H-2
Q803 G-5
Q804 G-5
Q805 G-5
Q806 H-4
Q807 H-6
Q808 H-6
Q809 H-5
Q810 H-5
Q811 G-5
Q851 G-4
Q852 H-4
Q901 F-6
Q902 F-6

HK-4 BOARD (COMPONENT SIDE)

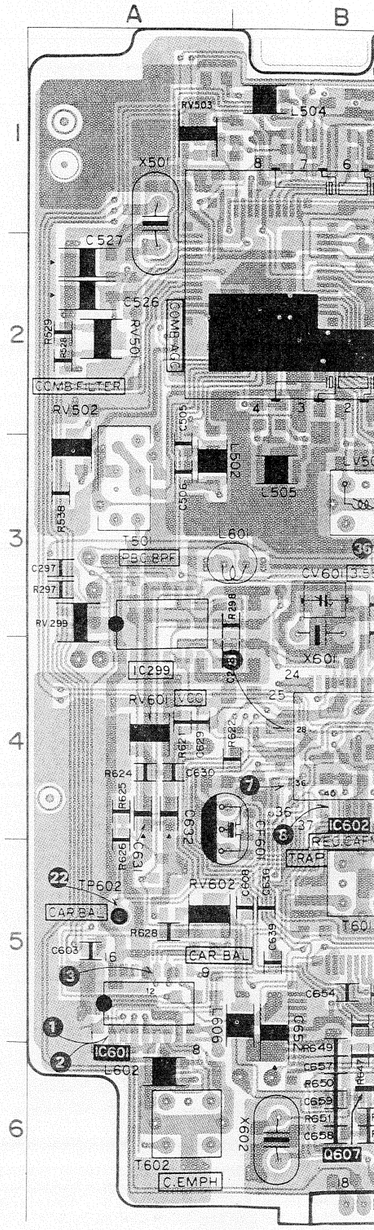

HK-4 BOARD (COMPONENT SIDE)

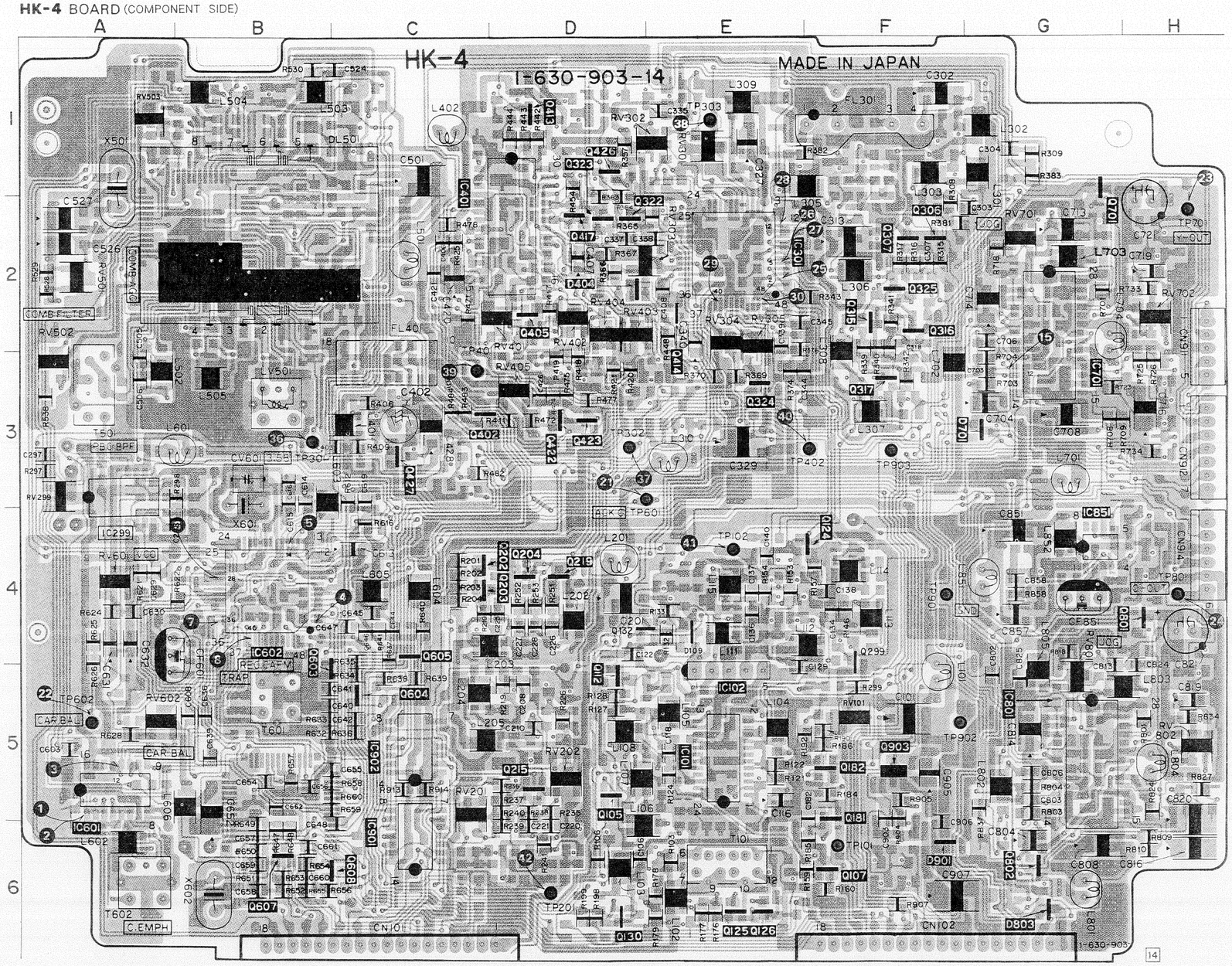

HK-4 BOARD (CONDUCTOR SIDE)

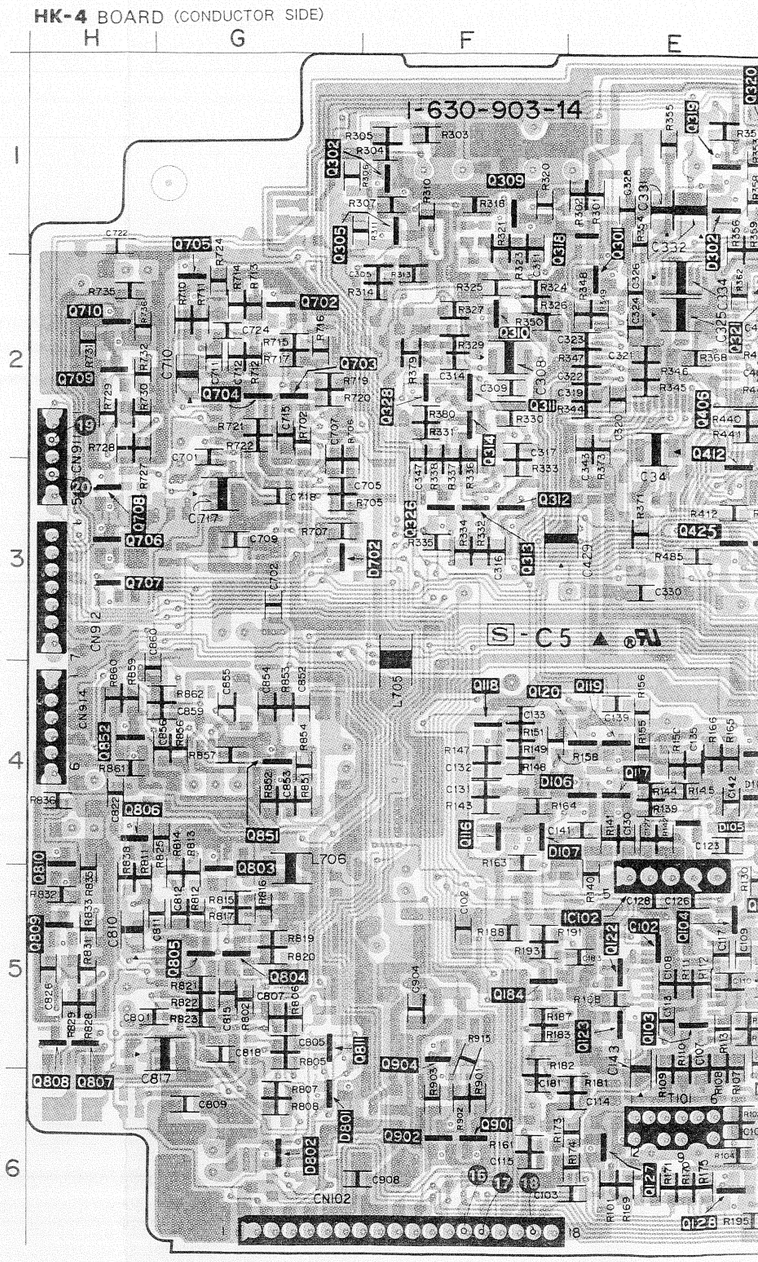

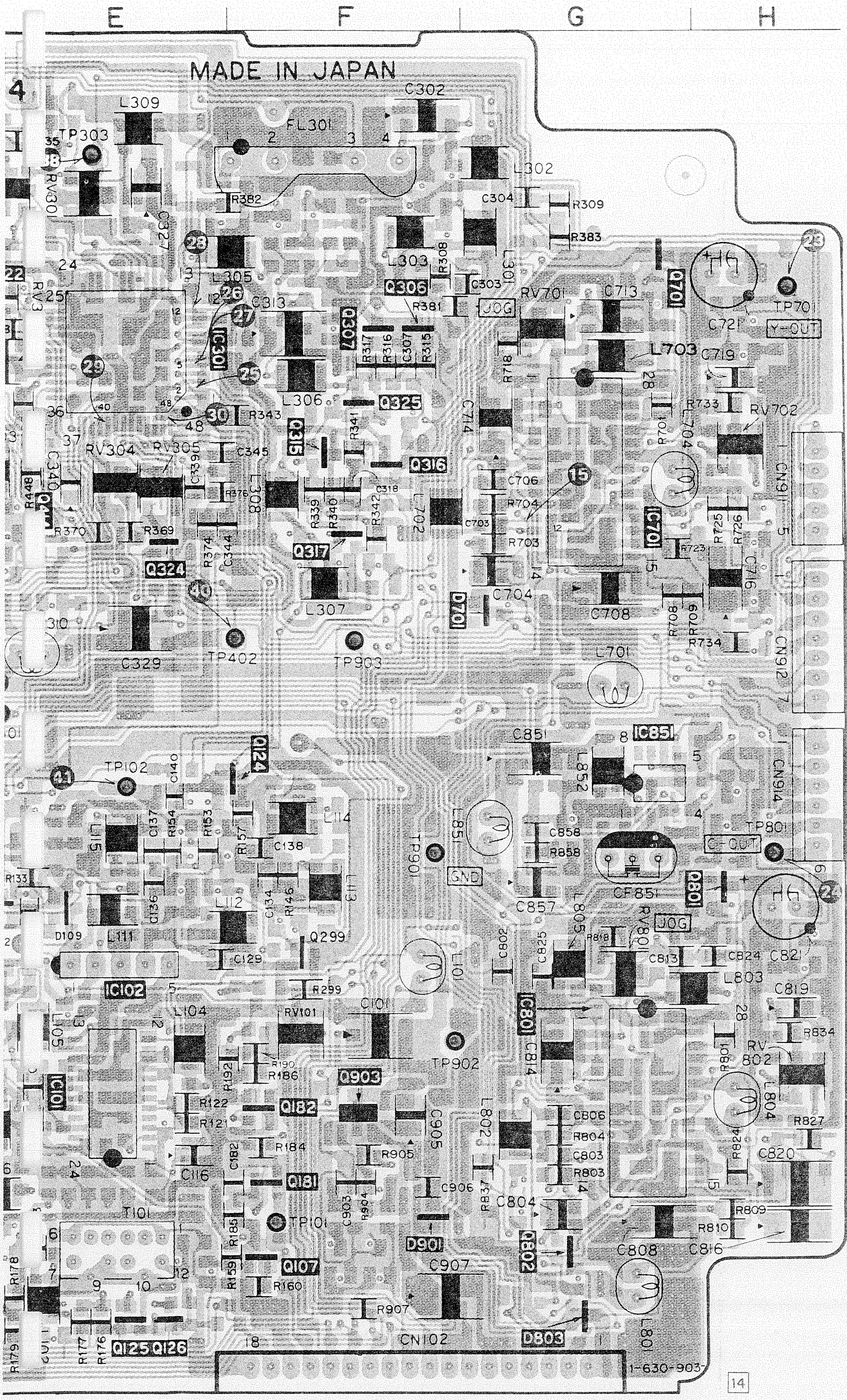

HK-4 BOARD (CONDUCTOR SIDE)

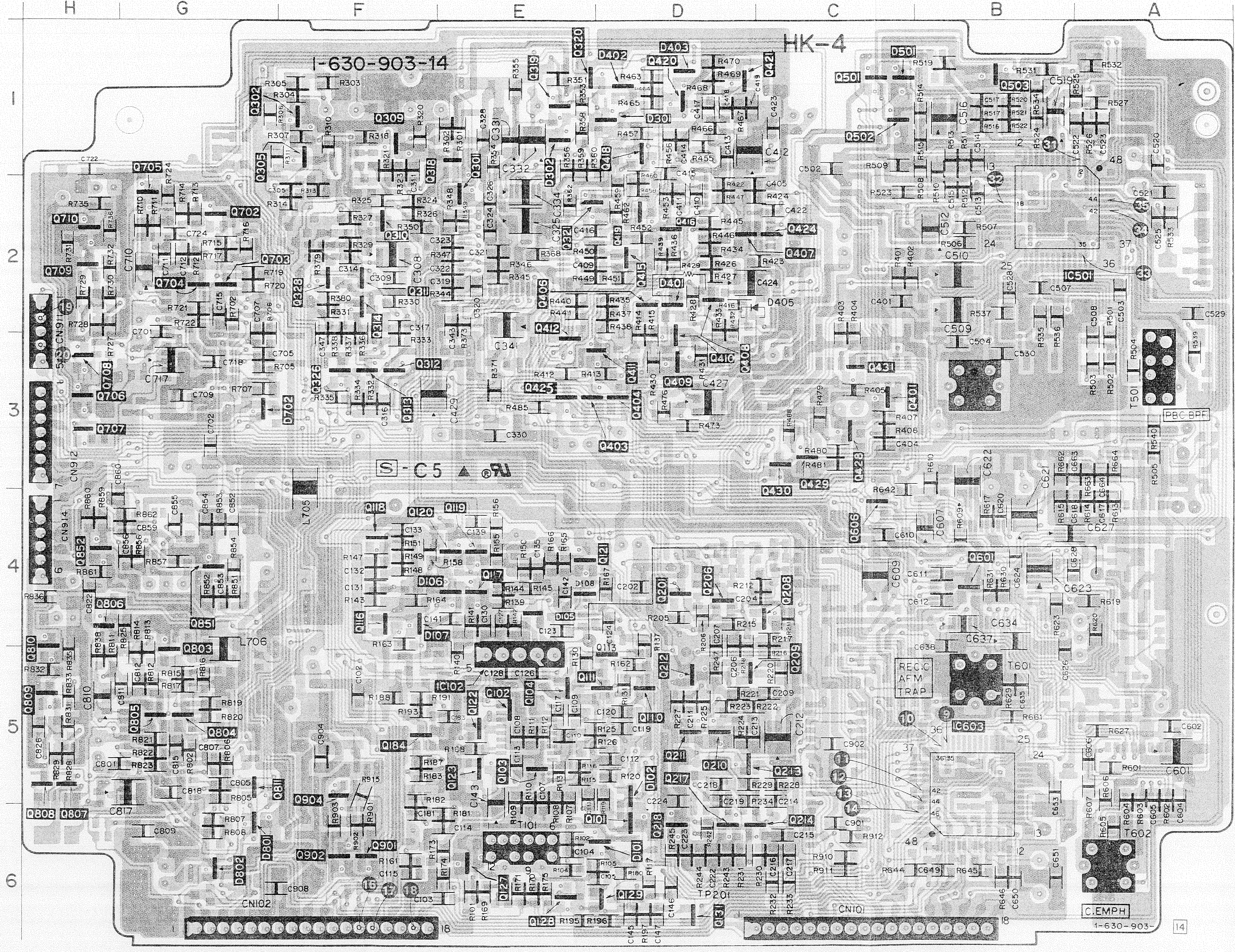

VIDEO VIDEO

— Ref. No. HK-4 BOARD: 4000 series —

HK-4 BOARD (3/3)

no mark : REC/PB mode
( ) : REC mode
( ) : PB mode

Q124 HI8 SW
Q120,119 BUFFER
Q118 HI8 MODE EQ
Q117 STD MODE EQ
Q116 HI8 MODE EQ
IC102 BA401 LIMITER AMP
Q113,111 AMP
Q110,112 HI8/STD GAIN SW
Q123,122 TIME CONSTANT SW
Q121 LIMITER SW
Q202,203 AFM TRAP
Q201 BUFFER
Q219,204 HI8/STD DETECT
Q206 BUFFER
Q208 BUFFER
Q209 REC Y EQ
Q210,211 HI8/STD SW
Q212 HI8/STD SW

IC102
BA401
LIMITER AMP

Q113,111
AMP

Q110,112
HI8/STD GAIN SW

IC101
TA8607F
DROPOUT DETECT

Q101
BUFFER

Q102
EQ CHRACTER SW

Q103
EQ AMP

Q105,104
EQ CHRACTER SW

Q127
AFM STEREO SWITCH

Q126
CNR SW

Q125
INVERTER

Q181,182
DROPOUT DETECT

Q299
DTA144EK

Q184
DROPOUT

Q121
LIMITER SW

Q123,122
TIME CONSTANT SW

Q107
PB RF BUFFER

Q128
CNR SW

Q215
ME/MP/MPHG SW

Q213
ME/MP SW

Q218,217
Y/C/AFM/ATF MIX

Q214
C/AFM/ATF MIX

Q208
BUFFER

Q209
REC Y EQ

Q210,211
HI8/STD SW

Q212
HI8/STD SW

Q129
PB C EQ

Q130
CNR DETECT

Q131
PB C AMP

<HK>
<MPHG HK>
<ME/MP>
<ME HK>
<AFM>

TO HK-4 BOARD (2/3)

BURST PULSE, HK, HJ, WP HG, HK, ME/MP, WP/ME, WP HG, HJ, REG 5V, D.O.P, JOG, SP/LP, PB 5V, GND

TO HK-4 BOARD (1/3)

ATF, REC V RF, REC AFM, PB RF AGC, PB V RF, PB C RF, PB Y RF, REC C RF, REC Y RF, AFM STEREO, CNR, S.U PULSE

(See Page 96)

(See Page 91)

5 | 6 | 7 | 8 | 9 | 10 | 11 | 12 | 13 | 14 | 15 | 16

/PB mode
mode
mode

Q117
STD MODE EQ

Q116
HIS MODE EQ

IC102
BA401
LIMITER AMP

Q113,111
AMP
Q110,112
HI8/STD GAIN SW

IC101
TA8607F
DROPOUT DETECT

Q101
BUFFER
Q102
EQ CHRACTER SW
Q103
EQ AMP
Q105,104
EQ CHRACTER SW
Q127
AFM STEREO SWITCH
Q126
CNR SW
Q125
INVERTER

<HK>

Q121
LIMITER SW

Q123,122
TIME CONSTANT SW

Q107
PB RF BUFFER

Q128
CNR SW

Q215
ME/MP/MPHG SW

Q218,217
Y/C/AFM/ATF MIX

<MPHG HK>

Q206
BUFFER

Q208
BUFFER

Q209
REC Y EQ

Q210,211
HI8/STD SW

Q212
HI8/STD SW

<HJ>
<ME/MP>
<MP HG>
<MP HG HK>
<ME HK>
<MP/ME>

TO HK-4 BOARD (2/3)

BURST PULSE
HK
HJ
MP HG
HK
ME/MP
MP/ME
MP HG
HJ
REG 5V
D.O.P
JOG
SP/LP
PB 5V
GND

TO HK-4 BOARD (1/3)

ATF
REC V RF
REC AFM
PB RF AGC
PB V RF
PB C RF
PB Y RF
REC C RF
REC Y RF
AFM STEREO
CNR
S.U PULSE

(See Page 96)

(See Page 91)

16 | 17 | 18 | 19 | 20 | 21 | 22 | 23 | 24 | 25 | 26 | 27

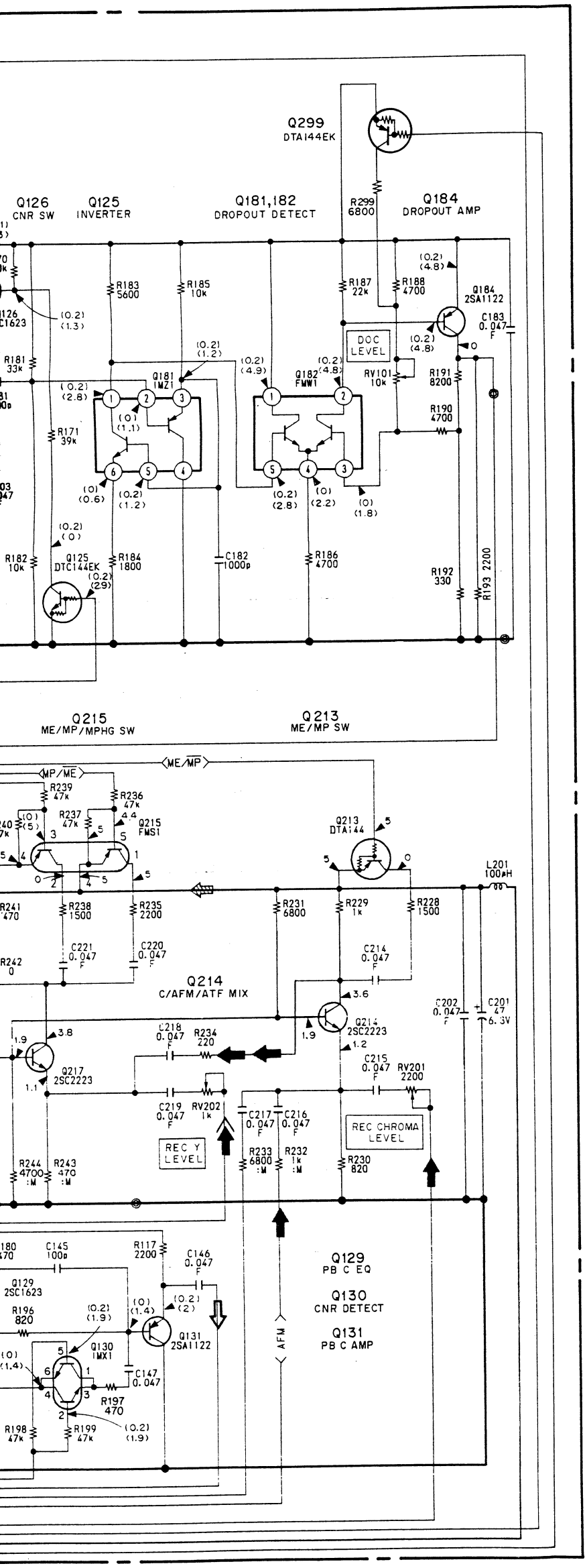

HK-4 BOARD (3/3)

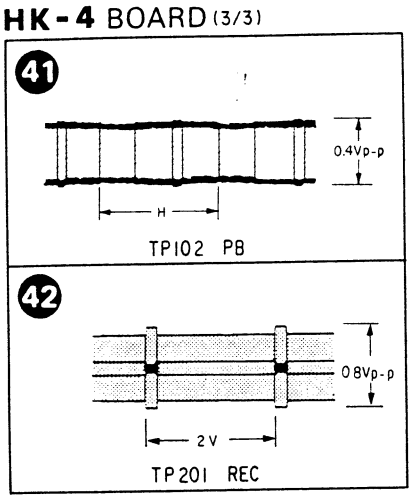

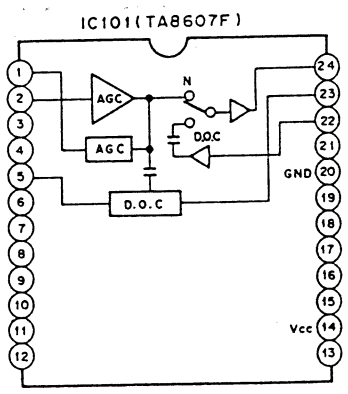

- **SIGNAL PATH**

	VIDEO SIGNAL			AUDIO SIGNAL
	CHROMA	Y	Y/CHROMA/DATA	
REC	➡	➡	➡	➡
PB	⇨	⇨	⇨	⇨

SE-10 BOARD (1/2)

1
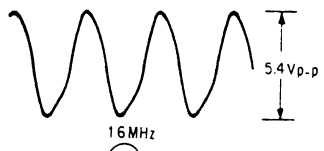

IC001 (34) REC/PB

2

IC002 (31) REC/PB

3

IC003 (31) REC/PB

4
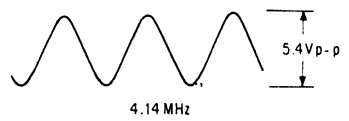

IC004 (9) REC/PB

5
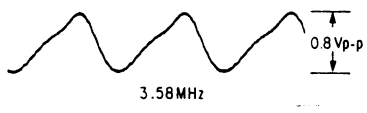

IC101 (2) REC/PB

6
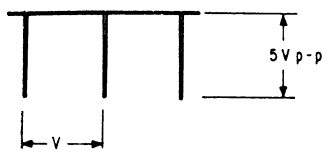

IC101 (19) REC

7
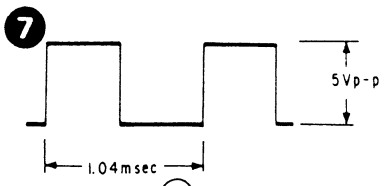

IC106 (13) REC/PB

8
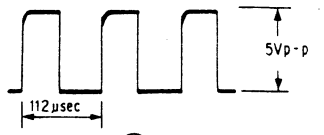

IC106 (13) CUE

9
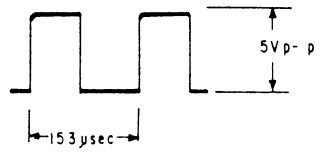

IC106 (13) REV

10
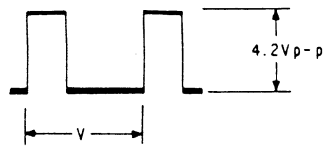

TP102 REC/PB

11
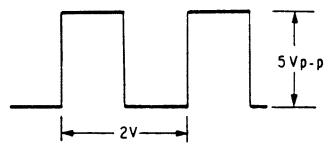

TP103 REC/PB

12
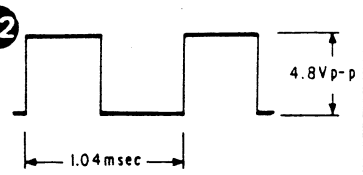

TP108 REC/PB

- **SIGNAL PATH**

	REC	REC/PB	PB
Drum speed servo		▷	
Drum phase servo		▷▷	
Drum servo (speed and phase)		▷▷▷	
Capstan speed servo		▷	
Capstan phase servo		▷»	
Capstan servo (speed and phase)		▷»»	
Ref. signal	▶		

SE-10 (SERVO, SYSTEM CONTROL) SCHEMATIC DIAGRAM

— Ref. No. SE-10 BOARD: 5000 series —

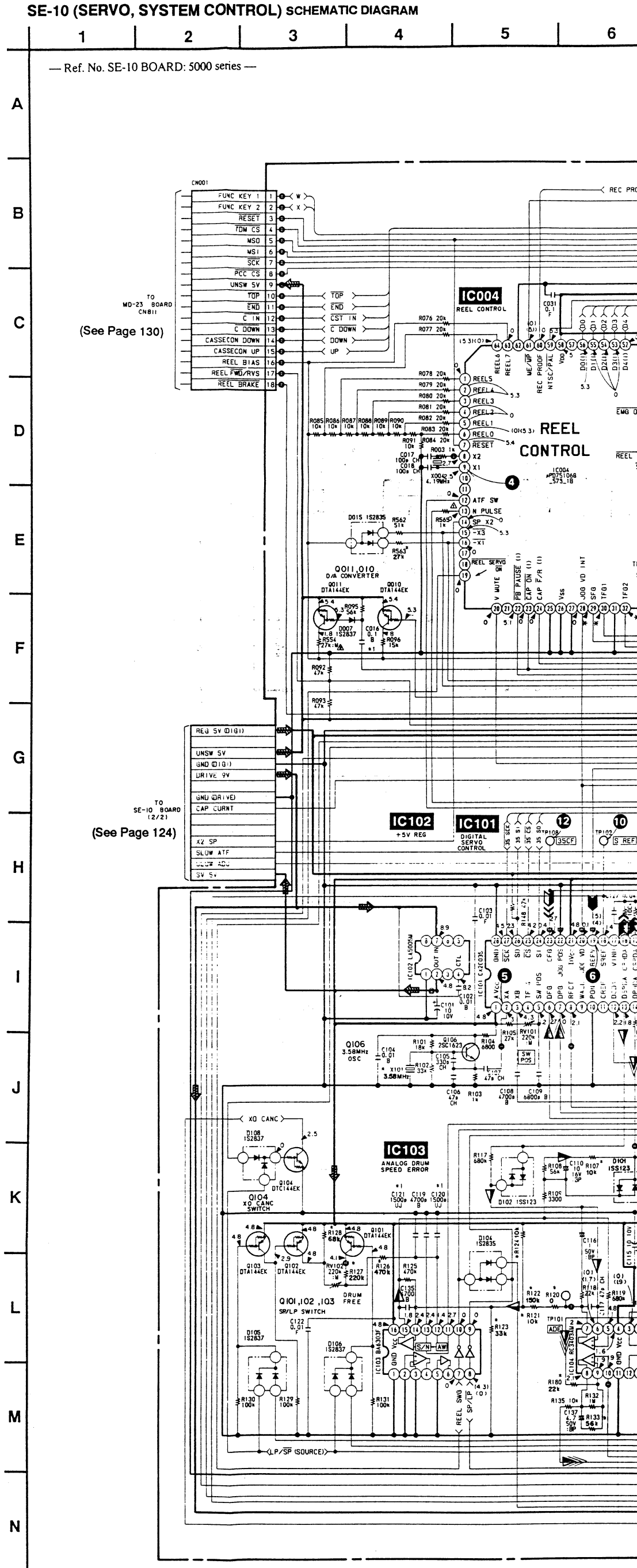

(See Page 136)

(See Page 123)

TO RS-31 BOARD CN305

TO SE-10 BOARD (2/2)

CHECK PIN

CN012: LSW B, REG 5V, HD SW, LOAD, UNLOAD, CONT R, CONT L, REC PROOF, START, HOLD, M SW C, M SW A, M SW B, WE/MP, DRIVE GND, TFG 1, SFG, DRIVE 5V, TFG 2, L SW C, L SW A, REG GND

CN901 (RED): DRIVE 5V, COM/ DATA, LCD CS, FUNC KEY 4, SP/ LP, TC/ REEL

DRIVE 5V, POWER ON

IC002 MECHA CONTROL

IC009 INVERTER

IC007 BUS SWITCH

REC PROOF, SCRMBL, IDW CS, MSO, MSI, SCK, PCC CS, REEL CS, S, TFG1, TFG2, SFG, CST IN, C DOWN, PFS, RESET, NT/ PAL

C035 0.1 F, R558 0

Q018 SWITCH

MECHA CONTROL

Q007 Q008 Q009 O/A CONVERTER

Q117 DTA144EK, D115 1S2835, X002 5MHz, C015 33p CH, C014 33p CH, R060 10k, R066 10k, R065 10k, R061 10k, R062 390, R059 10k, R058 10k, R064 10k

D4, D3, D2, D1, D0, SLOW, PB PAUSE, STEP, Vss, Vdd, FH CONT1, HI MODE, FE ON, X TAL, EX TAL, RST, SCK, SO, MECH CS, SI, XT, AUTO, EMG OFF, CAP FG, GAIN CONT, COMP CONT, ATF CS, RP PB MODE, JOG VD, END, TOP, RF SWP, RF SWP, SP/LP, CUE

HI REV, HI CUE, FH CONT2, REEL SWG, R RVS MODE, REEL START, JOG, DRUM ON, REEL RVS ON, RVS SLOW, CAP FWD/RVS, CAP ON, REEL REEL DIR, REEL BRAKE, REEL FWD/RVS, JOG VD INT

IC002 CXP5048-(C), IC009 TC4SV69F, IC007 TC4066BF

D008 1S2837, D006 1S2835, D013 1S2837, D012 1S2837, R067 1k, R048 2200, R094 22k, R069 3300, R073 33k, R072 560, R074 1k, R164 10k, R005 150k, R071 18k, R070 10k, C013 10 10V, C032 0.1 F, L003 10uH

Q008 DTC144EK, Q007 DTC144EK, Q009 DTC144EK, Q013 DTA144EK, Q006 DTC144EK, Q005 DTC144EK, Q014 DTC144EK

Q005 Q006 Q014 JOG SWITCH

R097 1k, R556 10k, R564 10k

JOG VD, 7

R555 10k, C011 33p CH, C010 33p CH, R050 10k, R051 10k, D003 1S2837, Q004 DTC144EK, C022 0.01 F, Q003 DTA144EK

Q003,004 CONTROL MOTOR DRIVE SWITCH

ATF CONTROL

IC003 ATF CONTROL

IC003 CXP5048H

NTSC/PAL, RF PK, ME/MP, PFS, CST IN, CC DOWN, RF SWP, RF SWP, BIAS DOWN, STILL SW, CASECON DOWN, CASECON UP, UNLOAD, LOAD, TSB, TSA, HCHG, SEL16, SEL2, SEL1

R557 330k, R055 10k, R054 10k, R056 10k, R553 39k, R566 470, R567 1k, C012 4.7 16V, C033 0.1 F, D005 1S2837, D004 1S2837, R052 100k, R053 100k, R045 47k, R036 10k

Q002 INVERTER

INH SP/LP, TP002, L002 10uH, N PULSE

D016 1S2835, R561 10k, UNSW 5V

Q107,108 SP/LP SWITCH

Q109 INVERTER

LP FREE, LP FREE, SP/LP (SINK)

Q107 DTA144EK, Q108 DTA144EK, R157 24k, RV106 10k M, R158 22k, RV105 10k M, R153 10k, R106 330k, C136 1 F

IC105 DPUM DC, SP/LP FREE SWITCH

IC106 FG/PG PROCESS

IC104 BIAS AMP DRUM ERROR

Q701 INVERTER

IC106 MB674169U

FG PG PROCESS

D109 1S2837, R155 1k, R156 100k, R154 10k, C129 47 16V, Q110 DTA144EK, Q110 SWITCH, TP108 TO RING, C131 0.047, C130 0.01, R157 100k, R158 470k, R159 10k, L101 10uH, D110 1S2835, D111 1S2837, TP107 DS CLK, R160 3300, R161 180k, R162 1k, Q111 2SC1623, 3.58MHz AMP, TP105 CFG, CAP ON

AFSW, TP109 AFSW, R181 1k, C129 47 16V

Q112,113 GATE, Q114 AUTO SWITCH, Q115 RP SWITCH, Q116 INVERTER

D108 1S2837, R163 4700, R165 10k, R063 10k, R117 1S2835, Q112 DTA144EK, Q113 DTA144EK, Q114 DTC144EK, Q115 DTC144EK, Q116 DTA144EK, R167 100k

IC107 CAPSTAN ERROR AMP CAPSTAN BIAS AMP

IC008 AC/DC GAIN SWITCH

IC107 μPC358G2, IC108 TC4066BF, R175 220k, R174 10k, C134 50V DP, C133 0.01 F, R171 33k, R173 10k, R172 47k, R169 100k, C132 0.01 B, R168 56k, R170 47k

IC305 TIMING CONTR

R330 10k, Q301 DTC144EK, R331 10k, T-CAP F/N, T-CAP DI, CAP ON

Q702-712,714 CAPSTAN SPEED, MODE CONTROL

TP106 DFG

-X1, -X3, REV, CUE, HI REV, HI CUE

Q702 DTA144EK, Q704 2SA812, Q708 DTA144EK, Q710 DTA144EK, Q705 2SA812, Q709 DTA144EK, Q711 DTA144EK, Q706 2SC1623, Q712 DTA144EK, Q714 DTC144EK, Q707 2SC1623, Q703 DTC144EK

R705 3300 :M, R704 82k :M, R708 82k :M, R703 68k :M, R707 150k, R709 18k :M, R710 18k :M, R702 2.2k, R711 4300 :M, R713 47k :M, R712 56k :M, R714 3300 :M

Q713 INVERTER, Q713 DTC144EK

D107 1S2835, D701 1S2837, D701 100k, Q701 DTA144EK, R143 33k :M, R138 4700 :M, R149 0, R142 10k, R137 3300 :M, R139 0, R141 5600, RV103 22k :M, RV104 22k :M, LP SLOW, SP SLOW, R132 1M, R133 56k

C116 50V BP, C115 10 10V, C114 4700p B, C111 0.022 B, C112 0.022 B, C113 0.047 B, R112 470k, R113 470k, R115 220k, R114 220k, R118 22k, R119 680k

D101 1SS123, R107 10k, R110 470k, R111 470k, R116 120k

Q306,305,304 INVERTER

IC301 SLOW/STEP FH COMPENSATER FH BIAS AMP

Q303 FH MASK SWITCH

IC302 FH CONTROL SWITCH

Q302 INVERTER

R325 10k, R326 10k, R321 220k, R322 220k, R324 10k, R323 1k, Q306 DTA144EK, Q305 DTC144EK, Q304 DTC144EK, R316 4700, R319 47k, R318 1k, R317 4700, C309 0.01 F, C308 2.7 50V, C307 4.7 16V, C306 100 10V, C305 0.01 F, R320 47k, R314 1000, R312 3900, R313 0, C304 100 10V, Q303 DTC144EK, TP301 FH STEP, RV303 4700, R310 0, Q302 DTC144EK

REEL DIR, FWD

SP/LP (SOURCE)

TO SE-10 BOARD (2/2)

CN002: XO CANC, PCM AREA, C MUTE, HD INSERT, DUB AREA, SP/LP (SOURCE), LP/SP (SINK)

TO MD-23 BOARD CN812

CN002: AFM ST CONT IN, PCM AREA, C MUTE, HD INSERT, DUB AREA, GND (DRIVE), GND (DRIVE), DRIVE 9V, DRIVE 9V, M RF SWP, FH MSK, FE ON, DFG, DPG, CFG, GND (DIG), REG 5 (DIG), DRAM ON, DRAM BIAS, DRAM ERROR, CAP FWD/ RVS, CAP ON CONT, CAP ON, CAP BIAS, CAP ERROR, HI CUE, CUE, S REF, RF CONT, REEL SERVO ON

(See Page 123, 124)

(See Page 130)

4 5 6 7 8 9 10 11 12 13 14 15

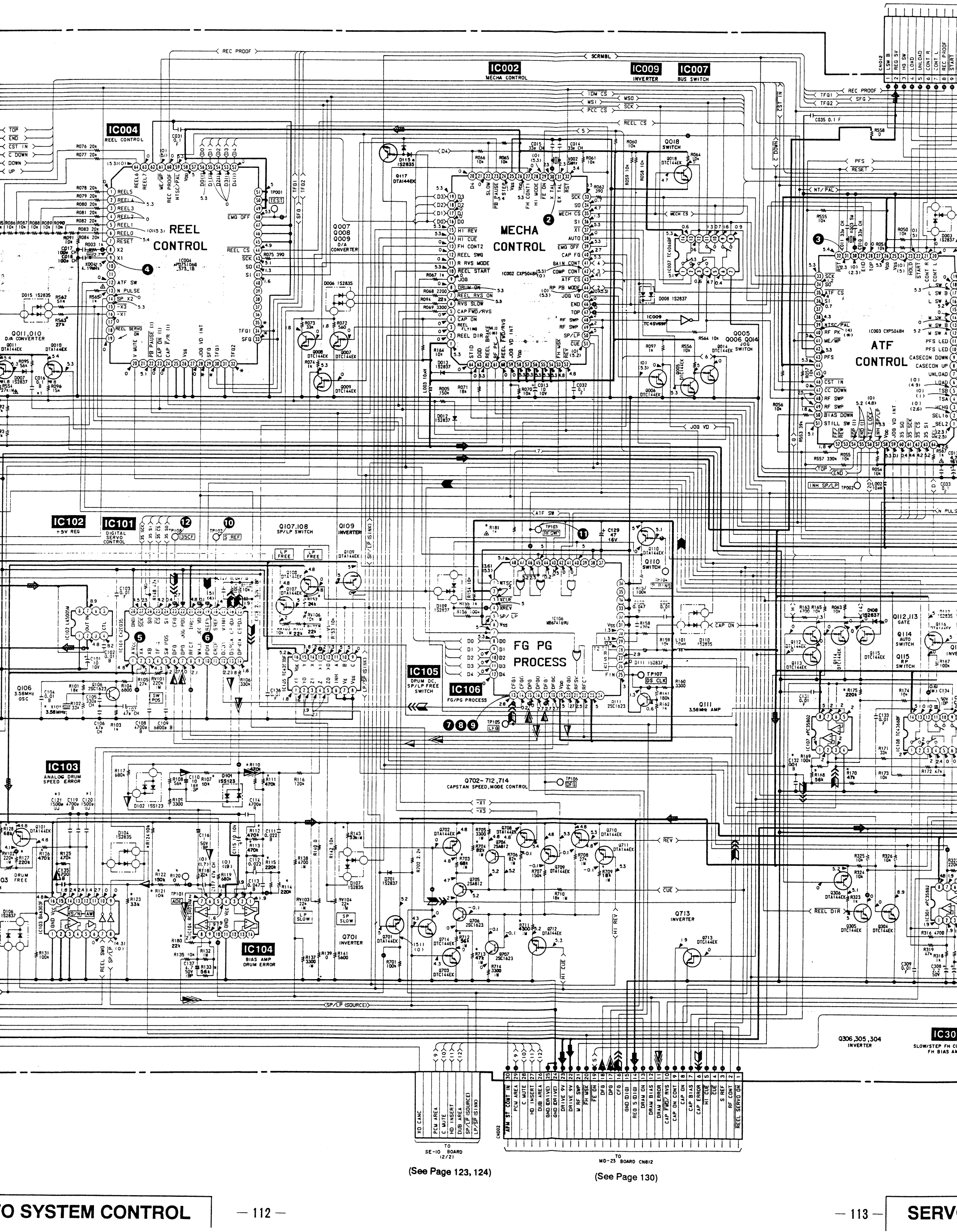

(See Page 136)

(See Page 123)

(See Page 189)

TO RS-31 BOARD CN305

TO SE-10 BOARD (2/2)

CHECK PIN

TO FB-169 BOARD W002

CN902 (WHT)

CN901 (RED)

IC001 MODE CONTROL

MODE CONTROL

CN903 (WHT)

TO FB-169 BOARD W003

(See Page 189)

CN904 (BLK)

NO USE

TO SE-10 BOARD (2/2)

(See Page 123, 124)

IC003 ATF CONTROL

Q003,004 CONTROL MOTOR DRIVE SWITCH

Q002 INVERTER

IC008 RESET

IC107 CAPSTAN ERROR AMP CAPSTAN BIAS AMP

IC008 AC/DC GAIN SWITCH

Q112,113 GATE

Q114 AUTO SWITCH

Q115 RP SWITCH

Q116 INVERTER

IC305 TIMING CONTROLLER

Q307,308,309 TIMING CONTROLLER

IC301 SLOW/STEP FH COMPENSATER FH BIAS AMP

Q303 FH MASK SWITCH

IC302 FH CONTROL SWITCH

Q302 INVERTER

IC303 SP/LP SWITCH MMV SWITCH

IC304 MMV BRAKE PULSE GENERATOR

Q301 SP/LP SWITCH

no mark : REC/PB mode
( ) : REC mode
〈 〉 : PB mode
* : can not be measu

SE-10 BOARD (1/2)

SE-10 (SERVO, SYSTEM CONTROL, ATF SERVO, HEAD SELECT), IG-4 (LINK) PRINTED WIRING BOARDS

— Ref. No. SE-10 BOARD: 5000 series, IG-4 BOARD: 6000 series —

SE-10 BOARD (COMPONENT SIDE)		SE-10 BOARD (CONDUCTOR SIDE)	
D003	B-5	D008	C-2
D004	B-6	D009	B-1
D005	B-6	D015	B-4
D006	D-2	D107	D-5
D007	D-4	D108	D-5
D012	C-4	D109	D-4
D013	D-3	D110	D-4
D016	A-2	D111	C-5
D101	D-6	D112	F-3
D102	D-5	D203	H-3
D103	D-5	D301	E-1
D104	E-5	D302	E-2
D105	E-5	D701	E-5
D106	E-5		
D201	F-4	IC004	C-3
D401	G-2	IC007	C-3
		IC008	A-2
IC001	B-2	IC304	F-3
IC002	D-3		
IC003	A-5	Q002	B-2
IC101	C-5	Q005	C-1
IC102	G-2	Q006	D-2
IC103	D-6	Q008	D-2
IC104	C-6	Q014	C-1
IC105	E-5	Q101	E-6
IC106	C-4	Q102	E-5
IC107	G-2	Q103	E-5
IC108	F-2	Q104	C-5
IC201	G-4	Q106	B-5
IC202	G-4	Q107	D-5
IC203	H-3	Q108	D-5
IC204	F-4	Q109	D-4
IC205	F-4	Q110	D-4
IC301	F-2	Q111	C-4
IC302	E-2	Q112	D-2
IC303	E-1	Q113	D-1
IC305	E-3	Q115	E-2
IC601	F-6	Q116	F-2
IC602	G-5	Q202	G-4
IC603	H-4	Q205	H-3
IC604	H-4	Q209	F-4
		Q301	F-3
Q003	B-4	Q302	E-1
Q004	B-4	Q304	D-2
Q007	D-2	Q307	F-2
Q009	E-3	Q402	H-1
Q010	D-4	Q404	H-2
Q011	C-3	Q405	H-1
Q015	F-3	Q407	H-2
Q018	C-2	Q410	G-2
Q114	D-2	Q504	G-6
Q210	F-4	Q605	H-3
Q303	E-2	Q701	D-4
Q305	D-2	Q703	E-5
Q306	D-2	Q705	E-4
Q308	F-2	Q706	E-4
Q309	E-2	Q707	E-4
Q401	H-2	Q708	E-4
Q403	H-1	Q709	E-4
Q406	H-2	Q710	E-4
Q408	H-2	Q711	E-4
Q409	G-2	Q712	E-4
Q411	G-2	Q714	E-5
Q502	G-6		
Q503	G-6		
Q505	G-5		
Q506	G-5		
Q507	G-5		
Q508	G-5		
Q601	G-4		
Q604	H-3		
Q606	H-5		
Q702	D-4		
Q704	E-4		
Q713	E-4		

SE-10 BOARD (COMPONENT SIDE)

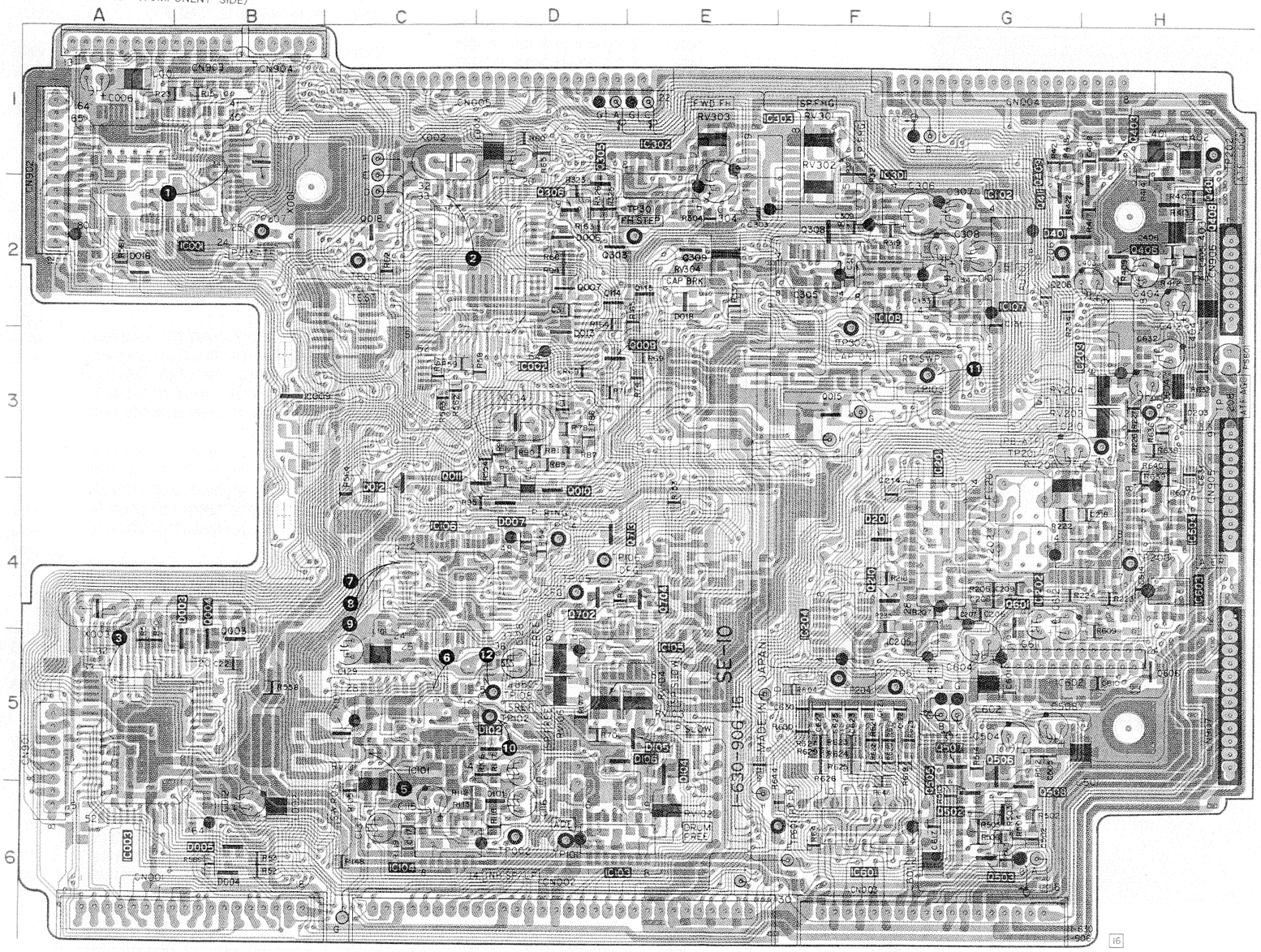

SE-10 BOARD (CONDUCTOR SIDE)

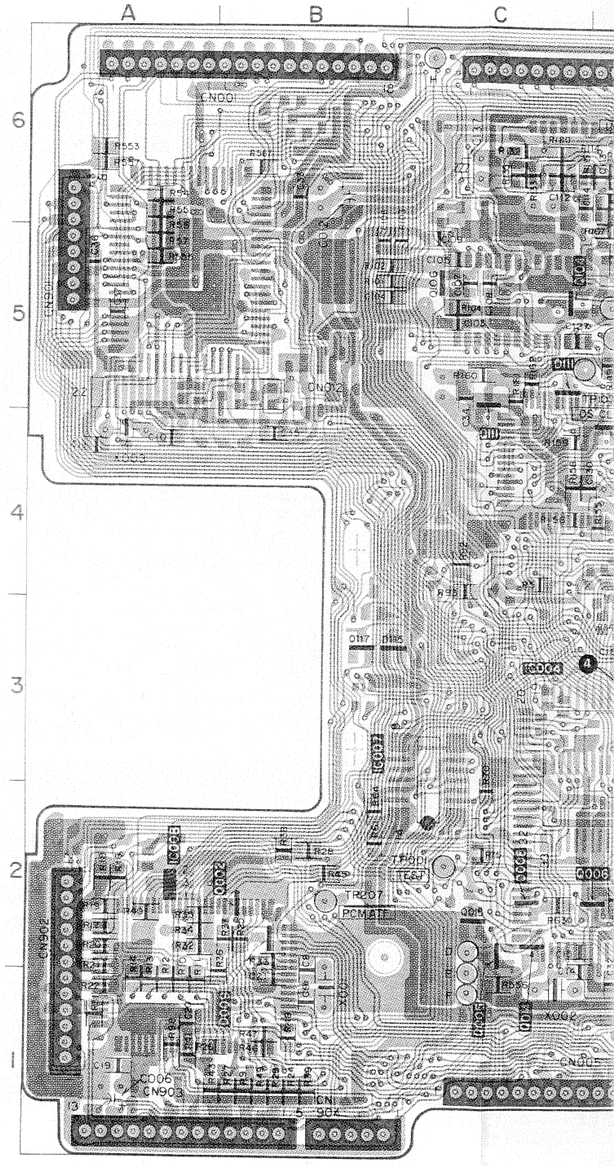

IG-4 BOARD (CONDUCTOR SIDE)

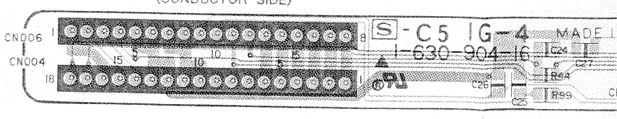

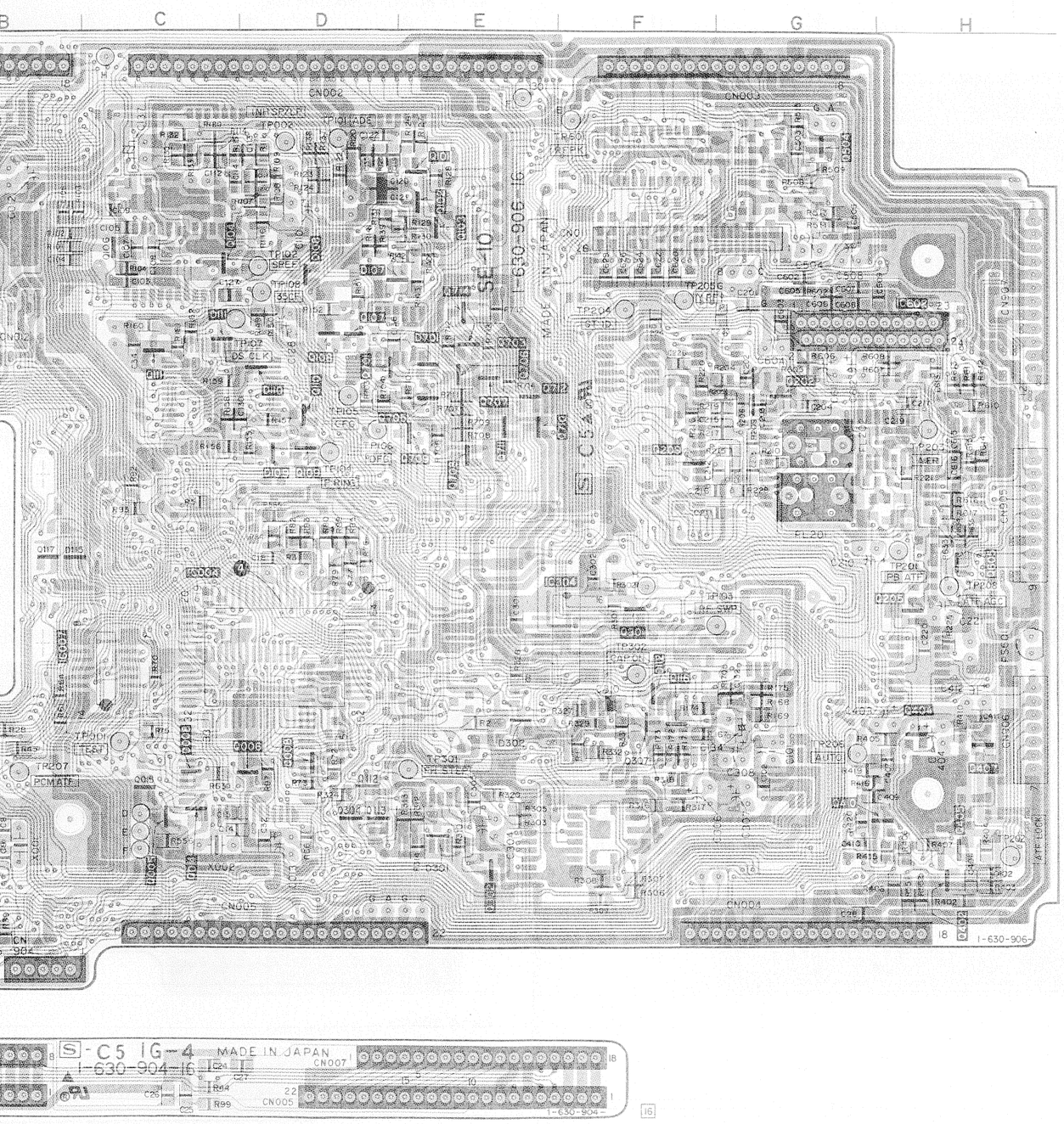

* A-7061-823-A SE-10 BOARD, COMPLETE

****

〈 DIODE 〉

D003	8-719-400-18	DIODE MA152WK
D004	8-719-400-18	DIODE MA152WK
D005	8-719-400-18	DIODE MA152WK
D006	8-719-104-34	DIODE 1S2836
D007	8-719-400-18	DIODE MA152WK
D008	8-719-400-18	DIODE MA152WK
D009	8-719-400-18	DIODE MA152WK
D012	8-719-400-18	DIODE MA152WK
D013	8-719-400-18	DIODE MA152WK
D015	8-719-104-34	DIODE 1S2836
D016	8-719-104-34	DIODE 1S2836
D018	8-719-400-18	DIODE MA152WK
D101	8-719-800-76	DIODE 1SS226
D102	8-719-800-76	DIODE 1SS226
D104	8-719-104-34	DIODE 1S2836
D105	8-719-400-18	DIODE MA152WK
D106	8-719-400-18	DIODE MA152WK
D107	8-719-104-34	DIODE 1S2836
D108	8-719-400-18	DIODE MA152WK
D109	8-719-400-18	DIODE MA152WK
D110	8-719-104-34	DIODE 1S2836
D111	8-719-400-18	DIODE MA152WK
D112	8-719-104-34	DIODE 1S2836
D115	8-719-104-34	DIODE 1S2836
D201	8-719-400-18	DIODE MA152WK
D203	8-719-105-82	DIODE RD5.1M
D203	8-719-105-83	DIODE RD5.1M
D301	8-719-400-18	DIODE MA152WK
D302	8-719-400-18	DIODE MA152WK
D401	8-719-800-76	DIODE 1SS226
D701	8-719-400-18	DIODE MA152WK

〈 IC 〉

IC001	8-752-816-72	IC CXP80116-692Q
IC002	8-752-817-63	IC CXP5048H-243Q
IC003	8-752-815-13	IC CXP5048H-222Q
IC004	8-759-144-21	IC uPD75106G-573
IC007	8-759-008-67	IC TC4066BF
IC008	8-759-937-56	IC S-8054ALB-LM
IC009	8-759-209-15	IC TC4SU69F
IC101	8-752-003-50	IC CX20035
IC102	8-759-803-47	IC LA5005M
IC103	8-759-925-66	IC BA6303F
IC104	8-759-981-75	IC RC3403AM
IC105	8-759-300-71	IC TC4053BF
IC106	8-759-971-25	IC MB674169U
IC107	8-759-100-94	IC uPC358G2
IC108	8-759-008-67	IC TC4066BF
IC201	8-759-928-56	IC CXA1042M
IC202	8-759-150-05	IC uPC324G2
IC203	8-759-300-71	IC TC4053BF
IC204	8-759-927-46	IC SN74HC00ANS
IC206	8-759-035-93	IC TC7S32F
IC301	8-759-100-94	IC uPC358G2
IC302	8-759-300-71	IC TC4053BF
IC303	8-759-300-71	IC TC4053BF
IC304	8-759-200-90	IC TC4538BF
IC305	8-759-927-46	IC SN74HC00ANS
IC601	8-759-927-94	IC BU3707F
IC602	8-759-927-52	IC BA7036LS
IC603	8-759-100-93	IC uPC393G2
IC604	8-759-150-05	IC uPC324G2
IC651	8-759-711-79	IC NJM2233BM

〈 TRANSISTOR 〉

Q002	8-729-901-01	TRANSISTOR DTC144EK
Q003	8-729-901-06	TRANSISTOR DTA144EK
Q004	8-729-901-01	TRANSISTOR DTC144EK
Q005	8-729-901-01	TRANSISTOR DTC144EK
Q006	8-729-901-01	TRANSISTOR DTC144EK
Q007	8-729-901-01	TRANSISTOR DTC144EK
Q008	8-729-901-01	TRANSISTOR DTC144EK
Q009	8-729-901-01	TRANSISTOR DTC144EK
Q010	8-729-901-06	TRANSISTOR DTA144EK
Q011	8-729-901-06	TRANSISTOR DTA144EK
Q014	8-729-901-01	TRANSISTOR DTC144EK
Q015	8-729-901-01	TRANSISTOR DTC144EK
Q018	8-729-901-01	TRANSISTOR DTC144EK
Q101	8-729-901-06	TRANSISTOR DTA144EK
Q102	8-729-901-06	TRANSISTOR DTA144EK
Q103	8-729-901-06	TRANSISTOR DTA144EK
Q104	8-729-901-01	TRANSISTOR DTC144EK
Q106	8-729-100-66	TRANSISTOR 2SC1623
Q107	8-729-901-06	TRANSISTOR DTA144EK
Q108	8-729-901-06	TRANSISTOR DTA144EK
Q109	8-729-901-06	TRANSISTOR DTA144EK
Q110	8-729-901-06	TRANSISTOR DTA144EK
Q111	8-729-100-66	TRANSISTOR 2SC1623
Q112	8-729-901-01	TRANSISTOR DTC144EK
Q113	8-729-901-01	TRANSISTOR DTC144EK
Q114	8-729-901-01	TRANSISTOR DTC144EK
Q115	8-729-901-01	TRANSISTOR DTC144EK
Q116	8-729-901-06	TRANSISTOR DTA144EK
Q117	8-729-901-06	TRANSISTOR DTA144EK
Q202	8-729-216-22	TRANSISTOR 2SA1162
Q205	8-729-901-01	TRANSISTOR DTC144EK
Q209	8-729-901-06	TRANSISTOR DTA144EK
Q210	8-729-901-01	TRANSISTOR DTC144EK
Q301	8-729-901-06	TRANSISTOR DTA144EK
Q302	8-729-901-01	TRANSISTOR DTC144EK
Q303	8-729-901-01	TRANSISTOR DTC144EK
Q304	8-729-901-01	TRANSISTOR DTC144EK
Q305	8-729-901-01	TRANSISTOR DTC144EK
Q306	8-729-901-06	TRANSISTOR DTA144EK
Q307	8-729-901-01	TRANSISTOR DTC144EK
Q308	8-729-901-01	TRANSISTOR DTC144EK
Q309	8-729-901-01	TRANSISTOR DTC144EK
Q401	8-729-216-22	TRANSISTOR 2SA1162
Q402	8-729-100-66	TRANSISTOR 2SC1623
Q403	8-729-100-66	TRANSISTOR 2SC1623
Q404	8-729-216-22	TRANSISTOR 2SA1162
Q405	8-729-100-66	TRANSISTOR 2SC1623
Q406	8-729-216-22	TRANSISTOR 2SA1162
Q407	8-729-100-66	TRANSISTOR 2SC1623
Q408	8-729-216-22	TRANSISTOR 2SA1162
Q409	8-729-100-66	TRANSISTOR 2SC1623
Q410	8-729-100-66	TRANSISTOR 2SC1623
Q411	8-729-100-66	TRANSISTOR 2SC1623
Q502	8-729-100-66	TRANSISTOR 2SC1623
Q503	8-729-901-06	TRANSISTOR DTA144EK
Q504	8-729-100-66	TRANSISTOR 2SC1623
Q505	8-729-100-66	TRANSISTOR 2SC1623
Q506	8-729-100-66	TRANSISTOR 2SC1623
Q507	8-729-901-06	TRANSISTOR DTA144EK
Q508	8-729-901-06	TRANSISTOR DTA144EK
Q601	8-729-901-06	TRANSISTOR DTA144EK
Q604	8-729-805-25	TRANSISTOR 2SB1121
Q605	8-729-100-66	TRANSISTOR 2SC1623
Q606	8-729-901-06	TRANSISTOR DTA144EK
Q701	8-729-901-06	TRANSISTOR DTA144EK
Q702	8-729-901-06	TRANSISTOR DTA144EK
Q703	8-729-901-01	TRANSISTOR DTC144EK
Q704	8-729-216-22	TRANSISTOR 2SA1162
Q705	8-729-216-22	TRANSISTOR 2SA1162
Q706	8-729-100-66	TRANSISTOR 2SC1623
Q707	8-729-100-66	TRANSISTOR 2SC1623
Q708	8-729-901-06	TRANSISTOR DTA144EK
Q709	8-729-901-06	TRANSISTOR DTA144EK
Q710	8-729-901-06	TRANSISTOR DTA144EK
Q711	8-729-901-06	TRANSISTOR DTA144EK
Q712	8-729-901-06	TRANSISTOR DTA144EK
Q713	8-729-901-01	TRANSISTOR DTC144EK
Q714	8-729-901-01	TRANSISTOR DTC144EK

SE-10 (SERVO, SYSTEM CONTROL, ATF SERVO, HEAD SELECT), IG-4 (LINK) PRINTED WIRING BOARDS

— Ref. No. SE-10 BOARD: 5000 series, IG-4 BOARD: 6000 series —

* A-7061-823-A SE-10 BOARD, COMPLETE
****

〈 DIODE 〉

D 3 8-719-400-18 DIODE MA152WK
D 4 8-719-400-18 DIODE MA152WK
D005 8-719-400-18 DIODE MA152WK
D006 8-719-104-34 DIODE 1S2836
D 7 8-719-400-18 DIODE MA152WK

D008 8-719-400-18 DIODE MA152WK
D009 8-719-400-18 DIODE MA152WK
D 2 8-719-400-18 DIODE MA152WK
D 3 8-719-400-18 DIODE MA152WK
D015 8-719-104-34 DIODE 1S2836

D 6 8-719-104-34 DIODE 1S2836
D018 8-719-400-18 DIODE MA152WK
D101 8-719-800-76 DIODE 1SS226
D 2 8-719-800-76 DIODE 1SS226
D 4 8-719-104-34 DIODE 1S2836

D105 8-719-400-18 DIODE MA152WK
D 6 8-719-400-18 DIODE MA152WK
D 7 8-719-104-34 DIODE 1S2836
D108 8-719-400-18 DIODE MA152WK
D109 8-719-400-18 DIODE MA152WK

D 0 8-719-104-34 DIODE 1S2836
D111 8-719-400-18 DIODE MA152WK
D 2 8-719-104-34 DIODE 1S2836
D 5 8-719-104-34 DIODE 1S2836
D201 8-719-400-18 DIODE MA152WK

D 3 8-719-105-82 DIODE RD5.1M
D 3 8-719-105-83 DIODE RD5.1M
D301 8-719-400-18 DIODE MA152WK
D302 8-719-400-18 DIODE MA152WK
D 1 8-719-800-76 DIODE 1SS226

D701 8-719-400-18 DIODE MA152WK

〈 IC 〉

 01 8-752-816-72 IC CXP80116-692Q
 02 8-752-817-63 IC CXP5048H-243Q
IC003 8-752-815-13 IC CXP5048H-222Q
IC004 8-759-144-21 IC uPD75106G-573
 07 8-759-008-67 IC TC4066BF

IC008 8-759-937-56 IC S-8054ALB-LM
IC009 8-759-209-15 IC TC4SU69F
 01 8-752-003-50 IC CX20035
 02 8-759-803-47 IC LA5005M
IC103 8-759-925-66 IC BA6303F

 04 8-759-981-75 IC RC3403AM
IC105 8-759-300-71 IC TC4053BF
IC106 8-759-971-25 IC MB674169U
 07 8-759-100-94 IC uPC358G2
 08 8-759-008-67 IC TC4066BF

IC201 8-759-928-56 IC CXA1042M
IC202 8-759-150-05 IC uPC324G2
IC203 8-759-300-71 IC TC4053BF
IC204 8-759-927-46 IC SN74HC00ANS
IC206 8-759-035-93 IC TC7S32F

IC301 8-759-100-94 IC uPC358G2
IC302 8-759-300-71 IC TC4053BF
IC303 8-759-300-71 IC TC4053BF
IC304 8-759-200-90 IC TC4538BF
IC305 8-759-927-46 IC SN74HC00ANS

IC601 8-759-927-94 IC BU3707F
IC602 8-759-927-52 IC BA7036LS
IC603 8-759-100-93 IC uPC393G2
IC604 8-759-150-05 IC uPC324G2
IC651 8-759-711-79 IC NJM2233BM

〈 TRANSISTOR 〉

Q002 8-729-901-01 TRANSISTOR DTC144EK
Q003 8-729-901-06 TRANSISTOR DTA144EK
Q004 8-729-901-01 TRANSISTOR DTC144EK
Q005 8-729-901-01 TRANSISTOR DTC144EK
Q006 8-729-901-01 TRANSISTOR DTC144EK

Q007 8-729-901-01 TRANSISTOR DTC144EK
Q008 8-729-901-01 TRANSISTOR DTC144EK
Q009 8-729-901-01 TRANSISTOR DTC144EK
Q010 8-729-901-06 TRANSISTOR DTA144EK
Q011 8-729-901-06 TRANSISTOR DTA144EK

Q014 8-729-901-01 TRANSISTOR DTC144EK
Q015 8-729-901-01 TRANSISTOR DTC144EK
Q018 8-729-901-01 TRANSISTOR DTC144EK
Q101 8-729-901-06 TRANSISTOR DTA144EK
Q102 8-729-901-06 TRANSISTOR DTA144EK

Q103 8-729-901-06 TRANSISTOR DTA144EK
Q104 8-729-901-01 TRANSISTOR DTC144EK
Q106 8-729-100-66 TRANSISTOR 2SC1623
Q107 8-729-901-06 TRANSISTOR DTA144EK
Q108 8-729-901-06 TRANSISTOR DTA144EK

Q109 8-729-901-06 TRANSISTOR DTA144EK
Q110 8-729-901-06 TRANSISTOR DTA144EK
Q111 8-729-100-66 TRANSISTOR 2SC1623
Q112 8-729-901-01 TRANSISTOR DTC144EK
Q113 8-729-901-01 TRANSISTOR DTC144EK

Q114 8-729-901-01 TRANSISTOR DTC144EK
Q115 8-729-901-01 TRANSISTOR DTC144EK
Q116 8-729-901-06 TRANSISTOR DTA144EK
Q117 8-729-901-06 TRANSISTOR DTA144EK
Q202 8-729-216-22 TRANSISTOR 2SA1162

Q205 8-729-901-01 TRANSISTOR DTC144EK
Q209 8-729-901-06 TRANSISTOR DTA144EK
Q210 8-729-901-01 TRANSISTOR DTC144EK
Q301 8-729-901-06 TRANSISTOR DTA144EK
Q302 8-729-901-01 TRANSISTOR DTC144EK

Q303 8-729-901-01 TRANSISTOR DTC144EK
Q304 8-729-901-01 TRANSISTOR DTC144EK
Q305 8-729-901-01 TRANSISTOR DTC144EK
Q306 8-729-901-06 TRANSISTOR DTA144EK
Q307 8-729-901-01 TRANSISTOR DTC144EK

Q308 8-729-901-01 TRANSISTOR DTC144EK
Q309 8-729-901-01 TRANSISTOR DTC144EK
Q401 8-729-216-22 TRANSISTOR 2SA1162
Q402 8-729-100-66 TRANSISTOR 2SC1623
Q403 8-729-100-66 TRANSISTOR 2SC1623

Q404 8-729-216-22 TRANSISTOR 2SA1162
Q405 8-729-100-66 TRANSISTOR 2SC1623
Q406 8-729-216-22 TRANSISTOR 2SA1162
Q407 8-729-100-66 TRANSISTOR 2SC1623
Q408 8-729-216-22 TRANSISTOR 2SA1162

Q409 8-729-100-66 TRANSISTOR 2SC1623
Q410 8-729-100-66 TRANSISTOR 2SC1623
Q411 8-729-100-66 TRANSISTOR 2SC1623
Q502 8-729-100-66 TRANSISTOR 2SC1623
Q503 8-729-901-06 TRANSISTOR DTA144EK

Q504 8-729-100-66 TRANSISTOR 2SC1623
Q505 8-729-100-66 TRANSISTOR 2SC1623
Q506 8-729-100-66 TRANSISTOR 2SC1623
Q507 8-729-901-06 TRANSISTOR DTA144EK
Q508 8-729-901-06 TRANSISTOR DTA144EK

Q601 8-729-901-06 TRANSISTOR DTA144EK
Q604 8-729-805-25 TRANSISTOR 2SB1121
Q605 8-729-100-66 TRANSISTOR 2SC1623
Q606 8-729-901-06 TRANSISTOR DTA144EK
Q701 8-729-901-06 TRANSISTOR DTA144EK

Q702 8-729-901-06 TRANSISTOR DTA144EK
Q703 8-729-901-01 TRANSISTOR DTC144EK
Q704 8-729-216-22 TRANSISTOR 2SA1162
Q705 8-729-216-22 TRANSISTOR 2SA1162
Q706 8-729-100-66 TRANSISTOR 2SC1623

Q707 8-729-100-66 TRANSISTOR 2SC1623
Q708 8-729-901-06 TRANSISTOR DTA144EK
Q709 8-729-901-06 TRANSISTOR DTA144EK
Q710 8-729-901-06 TRANSISTOR DTA144EK
Q711 8-729-901-06 TRANSISTOR DTA144EK

Q712 8-729-901-06 TRANSISTOR DTA144EK
Q713 8-729-901-01 TRANSISTOR DTC144EK
Q714 8-729-901-01 TRANSISTOR DTC144EK

SE-10 BOARD (COMPONENT SIDE)		SE-10 BOARD (CONDUCTOR SIDE)	
D003	B-5	D008	C-2
D004	B-6	D009	B-1
D005	B-6	D015	B-4
D006	D-2	D107	D-5
D007	D-4	D108	D-5
D012	C-4	D109	D-4
D013	D-3	D110	D-4
D016	A-2	D111	C-5
D101	D-6	D112	F-3
D102	D-5	D203	H-3
D103	D-5	D301	E-1
D104	E-5	D302	E-2
D105	E-5	D701	E-5
D106	E-5		
D201	F-4	IC004	C-3
D401	G-2	IC007	C-3
		IC008	A-2
IC001	B-2	IC304	F-3
IC002	D-3		
IC003	A-5	Q002	B-2
IC101	C-5	Q005	C-1
IC102	G-2	Q006	D-2
IC103	D-6	Q008	D-2
IC104	C-6	Q014	C-1
IC105	E-5	Q101	E-6
IC106	C-4	Q102	E-5
IC107	G-2	Q103	E-5
IC108	F-2	Q104	C-5
IC201	G-4	Q106	B-5
IC202	G-4	Q107	D-5
IC203	H-3	Q108	D-5
IC204	F-4	Q109	D-4
IC205	F-4	Q110	D-4
IC301	F-2	Q111	C-4
IC302	E-2	Q112	D-2
IC303	E-1	Q113	D-1
IC305	E-3	Q115	E-2
IC601	F-6	Q116	F-2
IC602	G-5	Q202	G-4
IC603	H-4	Q205	H-3
IC604	H-4	Q209	F-4
		Q301	F-3
Q003	B-4	Q302	E-1
Q004	B-4	Q304	D-2
Q007	D-2	Q307	F-2
Q009	E-3	Q402	H-1
Q010	D-4	Q404	H-2
Q011	C-3	Q405	H-1
Q015	F-3	Q407	H-2
Q018	C-2	Q410	G-2
Q114	D-2	Q504	G-6
Q210	F-4	Q605	H-3
Q303	E-2	Q701	D-4
Q305	D-2	Q703	E-5
Q306	D-2	Q705	E-4
Q308	F-2	Q706	E-4
Q309	E-2	Q707	E-4
Q401	H-2	Q708	E-4
Q403	H-1	Q709	E-4
Q406	H-2	Q710	E-4
Q408	H-2	Q711	E-4
Q409	G-2	Q712	E-4
Q411	G-2	Q714	E-5
Q502	G-6		
Q503	G-6		
Q505	G-5		
Q506	G-5		
Q507	G-5		
Q508	G-5		
Q601	G-4		
Q604	H-3		
Q606	H-5		
Q702	D-4		
Q704	E-4		
Q713	E-4		

SE-10 BOARD (COMPONENT SIDE)

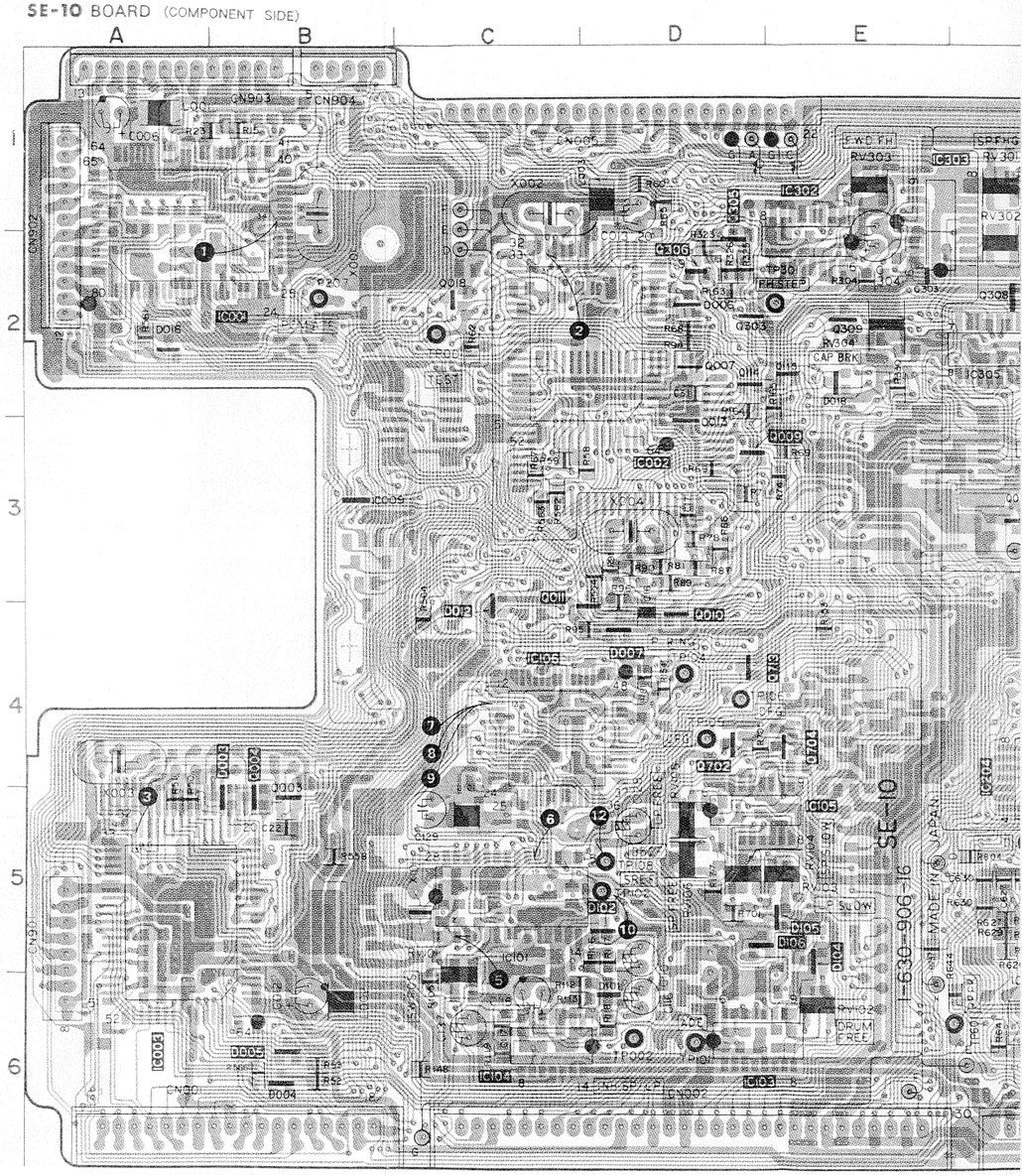

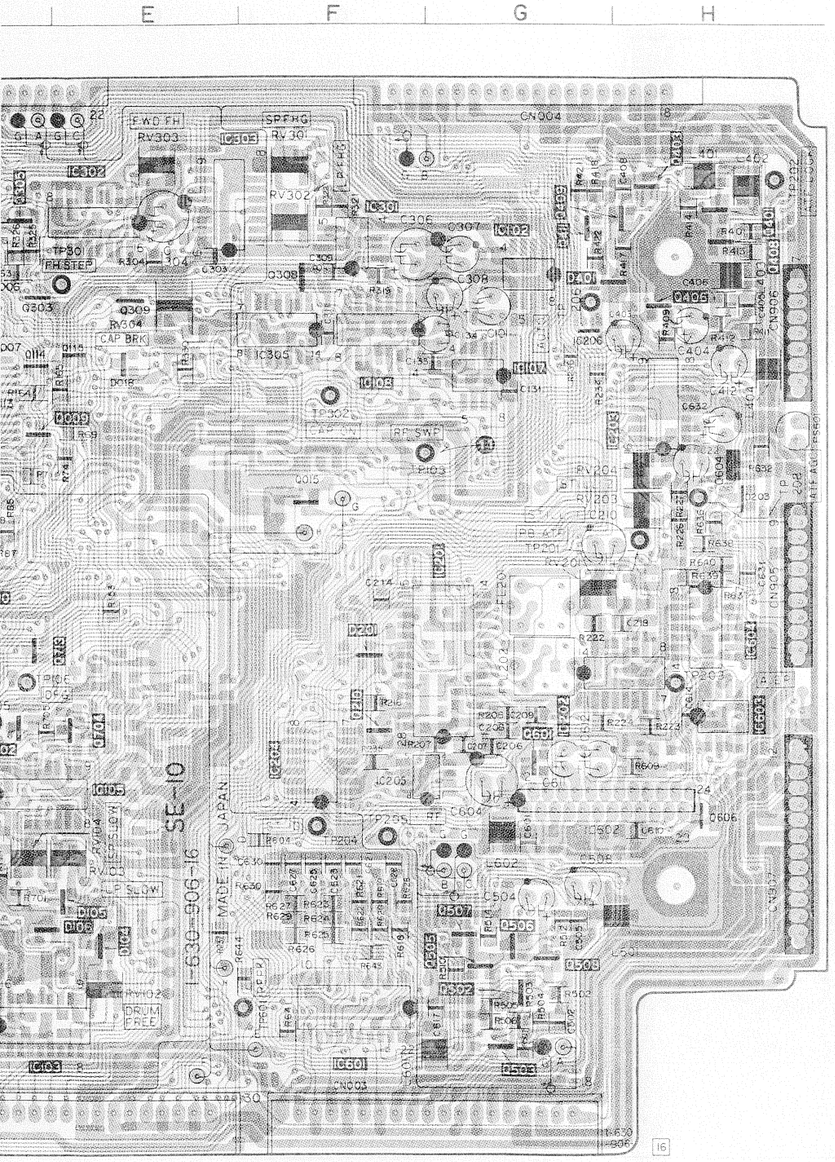

SE-10 BOARD (CONDUCTOR SIDE)

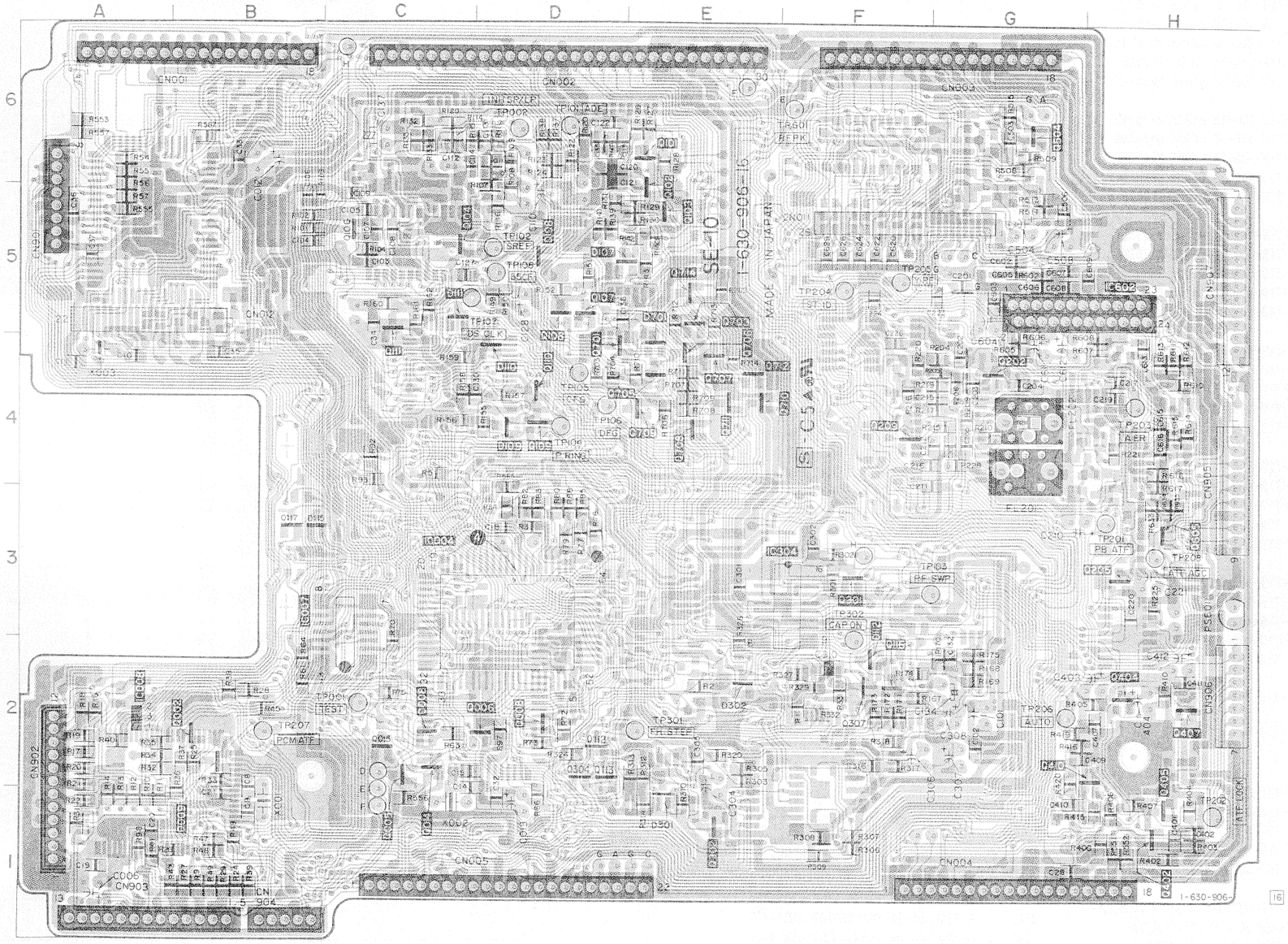

IG-4 BOARD (CONDUCTOR SIDE)

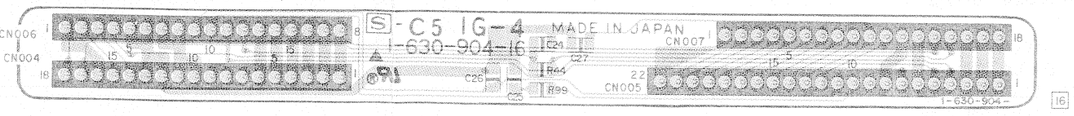

— Ref. No. SE-10 BOARD: 5000 series, IG-4 BOARD: 6000 series —

(See Page 112, 114)

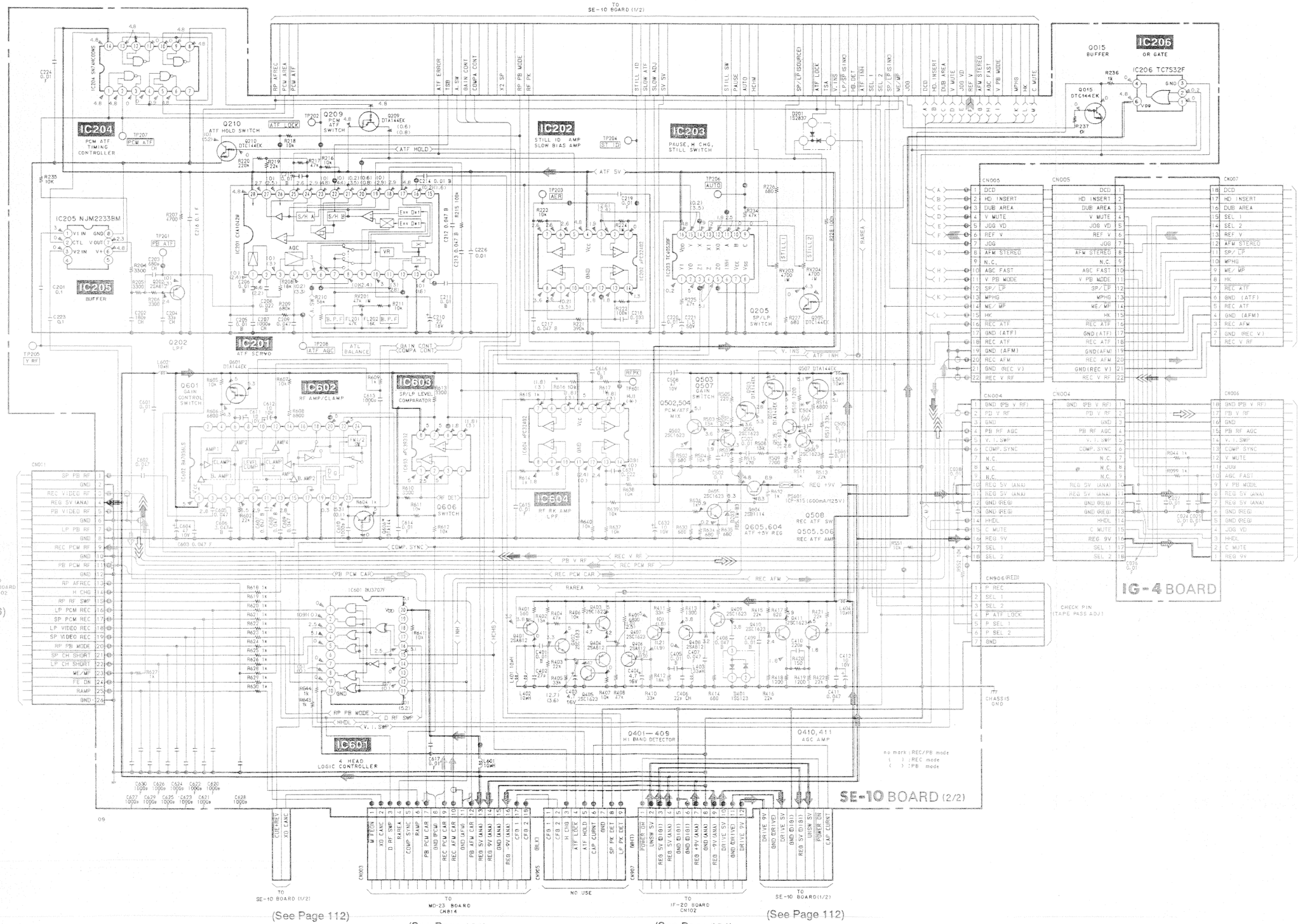

(See Page 76)
(See Page 112)
(See Page 131)
(See Page 184)
(See Page 112)
(See Page 90)
(See Page 91)

7 | 8 | 9 | 10 | 11 | 12 | 13 | 14 | 15 | 16 | 17 | 18 | 19 | 20 | 21 | 22

(See Page 112, 114)

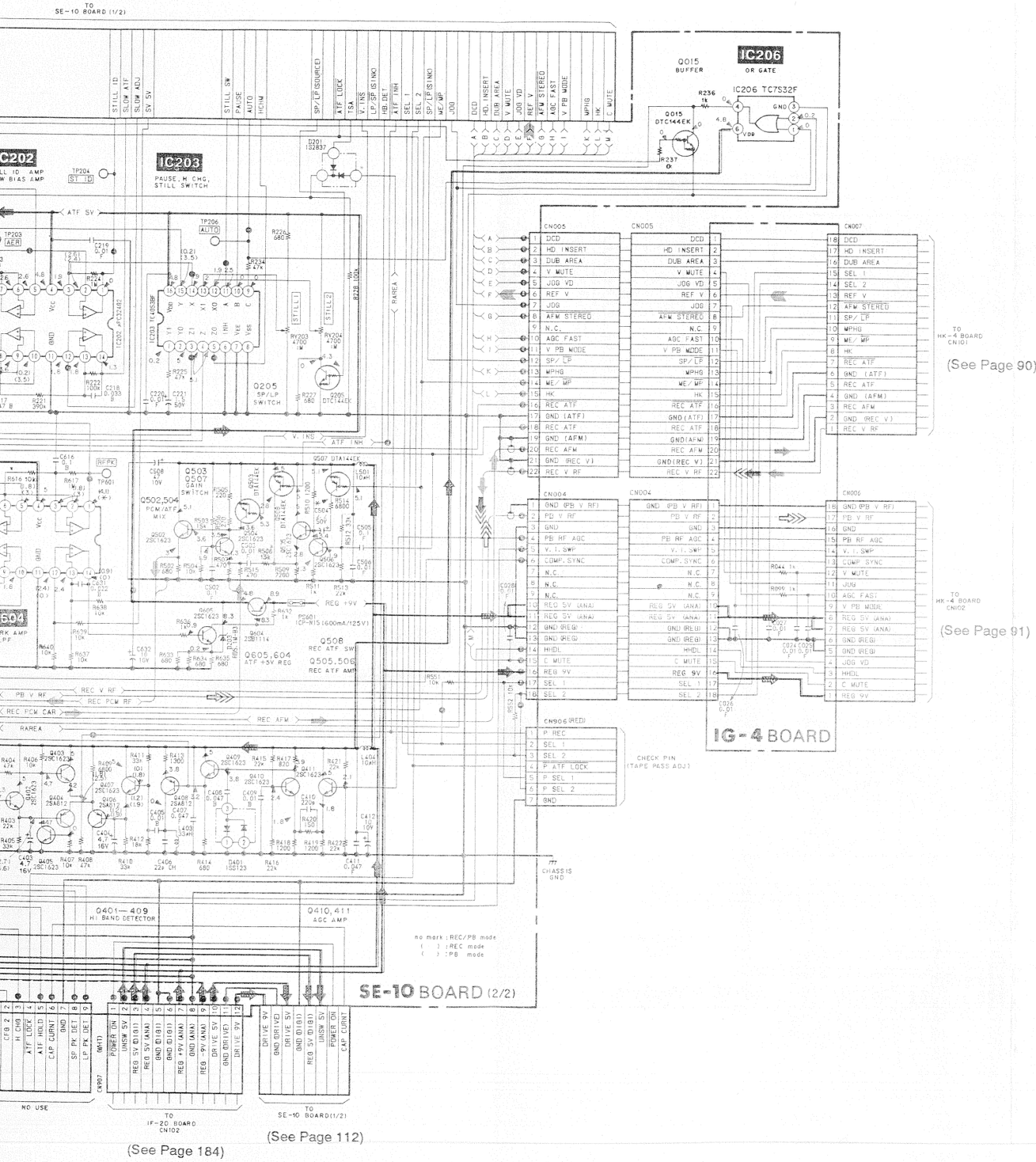

• **SIGNAL PATH**

	VIDEO SIGNAL			AUDIO SIGNAL
	CHROMA	Y	Y/CHROMA/DATA	
REC			⇛	⇨
PB			⇛	⇨

	REC	REC/PB	PB
Drum speed servo			
Drum phase servo			
Drum servo (speed and phase)			
Capstan speed servo			
Capstan phase servo			
Capstan servo (speed and phase)			
Ref. signal	➤		

MD-23 BOARD

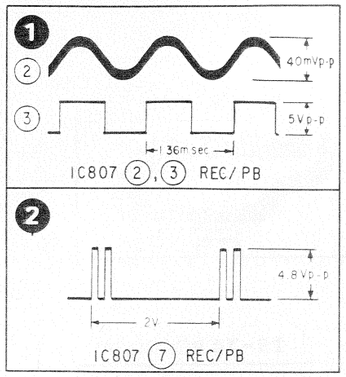

* A-7061-819-A MD-23 BOARD, COMPLETE
****

〈 DIODE 〉

D803	8-719-200-27	DIODE E10DS2
D810	8-719-400-18	DIODE MA152WK
D811	8-719-200-27	DIODE E10DS2
D901	8-719-400-18	DIODE MA152WK
D902	8-719-400-18	DIODE MA152WK
D903	8-719-400-18	DIODE MA152WK
D904	8-719-800-76	DIODE 1SS226
D905	8-719-400-18	DIODE MA152WK

〈 IC 〉

IC801	8-752-037-08	IC CXA1109M
IC802	8-759-802-79	IC LB1616M
IC804	8-759-514-98	IC RC3414M
IC805	8-759-100-93	IC uPC393G2
IC806	8-759-207-00	IC TA7733F
IC807	8-759-107-68	IC CX20115A
IC808	8-759-700-62	IC NJM4562M
IC809	8-759-100-94	IC uPC358G2
IC901	8-759-207-50	IC TA7745F
IC902	8-759-150-05	IC uPC324G2
IC903	8-759-925-66	IC BA6303F
IC904	8-759-008-67	IC TC4066BF

〈 TRANSISTOR 〉

Q806	8-729-111-14	TRANSISTOR 2SA1385-Z
Q807	8-729-901-06	TRANSISTOR DTA144EK
Q809	8-729-111-95	TRANSISTOR 2SC3518
Q810	8-729-805-25	TRANSISTOR 2SB1121
Q811	8-729-805-25	TRANSISTOR 2SB1121
Q812	8-729-111-14	TRANSISTOR 2SA1385-Z
Q813	8-729-100-66	TRANSISTOR 2SC1623
Q820	8-729-111-95	TRANSISTOR 2SC3518
Q821	8-729-100-66	TRANSISTOR 2SC1623
Q880	8-729-100-66	TRANSISTOR 2SC1623
Q901	8-729-920-82	TRANSISTOR 2SB1188-QR
Q902	8-729-920-82	TRANSISTOR 2SB1188-QR
Q903	8-729-920-82	TRANSISTOR 2SB1188-QR
Q904	8-729-901-06	TRANSISTOR DTA144EK
Q905	8-729-901-06	TRANSISTOR DTA144EK
Q906	8-729-901-01	TRANSISTOR DTC144EK
Q907	8-729-901-01	TRANSISTOR DTC144EK
Q908	8-729-901-01	TRANSISTOR DTC144EK
Q909	8-729-901-06	TRANSISTOR DTA144EK
Q950	8-729-903-97	TRANSISTOR FMS1FE
Q990	8-729-100-66	TRANSISTOR 2SC1623

MD-23 (CAPSTAN/DRUM/REEL MOTOR DRIVE), TS-74 (R) (TAPE TOP SENSOR), TS-74 (L) (TAPE END SENSOR) PRINTED WIRING BOA

— Ref. No. MD-23, TS-74(R) BOARD: 1000 series, TS-74(L) BOARD: 2000 series —

MD-23 BOARD (COMPONENT SIDE)

D810	F-3
D811	F-3
IC801	F-2
IC802	C-2
IC804	E-3
IC805	G-3
IC807	B-2
IC808	D-3
IC809	A-2
Q807	E-3
Q810	G-2
Q811	G-2
Q813	E-1
Q880	D-3
Q904	F-1
Q905	G-1
Q950	E-2
Q990	B-2

MD-23 BOARD (COMPONENT SIDE)

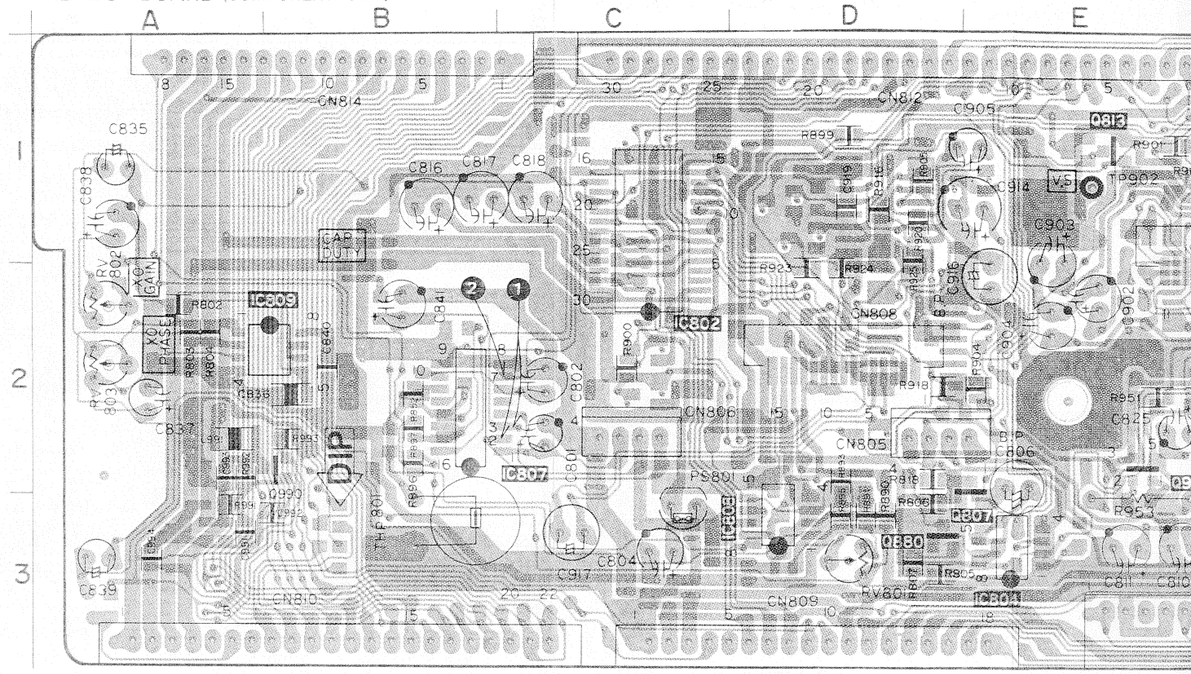

MD-23 BOARD (CONDUCTOR SIDE)

D803	C-1
D901	D-1
D902	F-1
D903	F-1
D904	D-2
D905	G-1
IC806	G-2
IC901	F-2
IC902	D-2
IC903	F-1
IC904	D-1
Q806	D-3
Q809	F-3
Q812	E-1
Q820	G-2
Q821	F-2
Q901	E-1
Q902	F-1
Q903	F-1
Q906	D-1
Q907	E-1
Q908	C-2
Q909	C-2

MD-23 BOARD (CONDUCTOR SIDE)

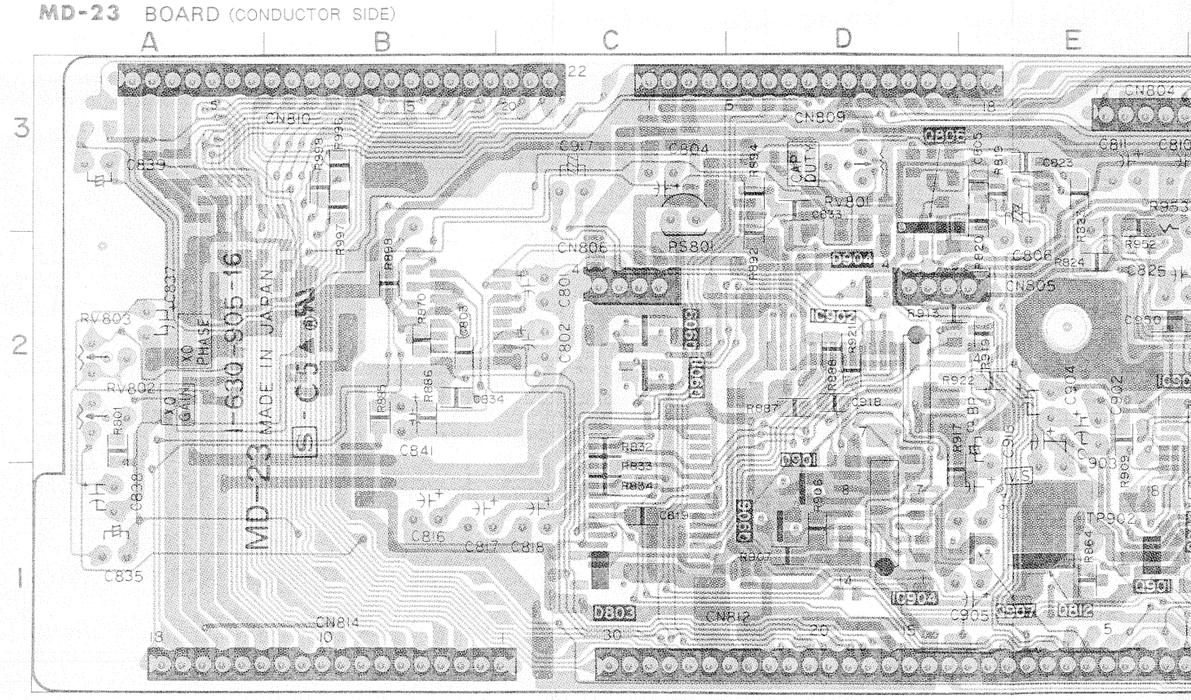

MD-23 (CAPSTAN/DRUM/REEL MOTOR DRIVE), TS-74 (R) (TAPE TOP SENSOR), TS-74 (L) (TAPE END SENSOR) PRINTED WIRING BOARDS

— Ref. No. MD-23, TS-74(R) BOARD: 1000 series, TS-74(L) BOARD: 2000 series —

MD-23 BOARD (COMPONENT SIDE)

D810 F-3
D811 F-3

IC801 F-2
IC802 C-2
IC804 E-3
IC805 G-3
IC807 B-2
IC808 D-3
IC809 A-2

Q807 E-3
Q810 G-2
Q811 G-2
Q813 E-1
Q860 D-3
Q904 F-1
Q905 G-1
Q950 E-2
Q990 B-2

MD-23 BOARD (COMPONENT SIDE)

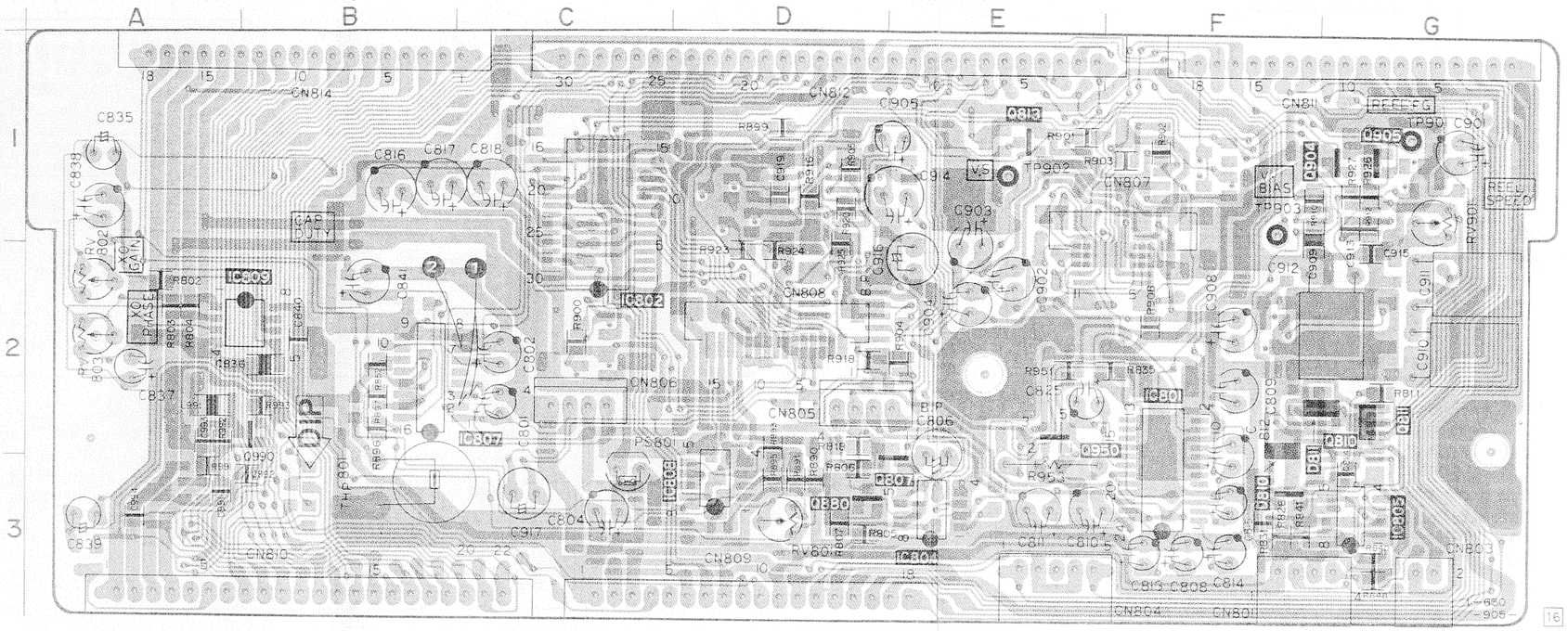

MD-23 BOARD (CONDUCTOR SIDE)

D803 C-1
D901 D-1
D902 F-1
D903 F-1
D904 D-2
D905 G-1

IC806 G-2
IC901 F-2
IC902 D-2
IC903 F-1
IC904 D-1

Q806 D-3
Q809 F-3
Q812 E-1
Q820 G-2
Q821 F-2
Q901 E-1
Q902 F-1
Q903 F-1
Q906 D-1
Q907 E-1
Q908 C-2
Q909 C-2

MD-23 BOARD (CONDUCTOR SIDE)

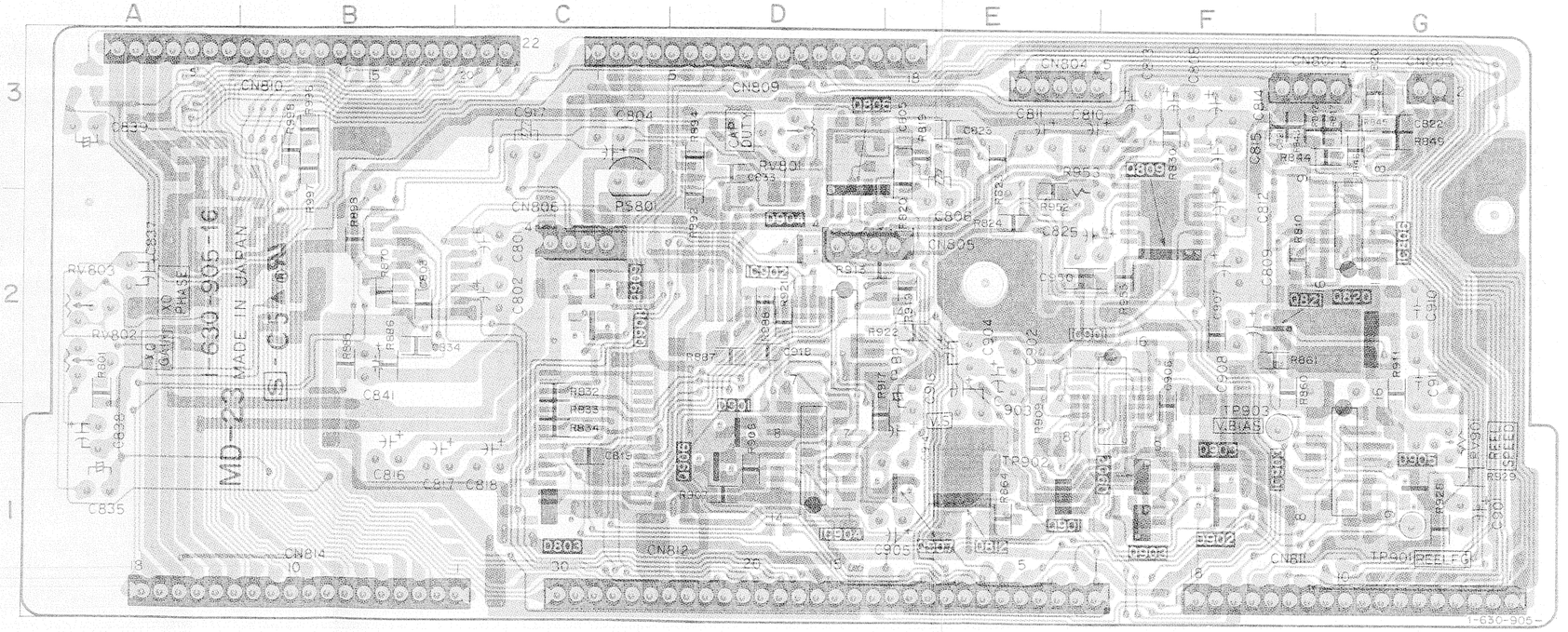

TO MD-23 BOARD CN801 — END, REG GND

TS-74 BOARD (L)

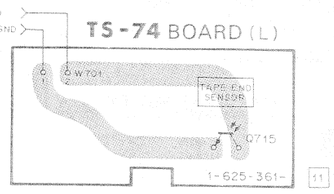

TO MD-23 BOARD CN801 — TOP, REG GND

TS-74 BOARD (R)

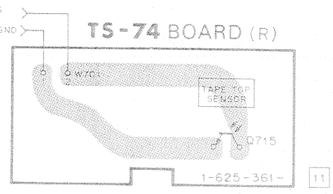

* A-7070-628-A TS-74 (L) BOARD, COMPLETE
****

〈 TRANSISTOR 〉

Q715 8-729-700-08 TRANSISTOR NJL714E

* A-7070-627-A TS-74 (R) BOARD, COMPLETE
****

〈 TRANSISTOR 〉

Q715 8-729-700-08 TRANSISTOR NJL714E

— Ref. No. MD-23, TS-74(R) BOARD: 1000 series, TS-74(L) BOARD: 2000 series —

• **SIGNAL PATH**

	VIDEO SIGNAL			AUDIO SIGNAL
	CHROMA	Y	Y/CHROMA/DATA	
REC				➡
PB				⇨

	REC	REC/PB	PB
Drum speed servo		▷	
Drum phase servo		▷▷	
Drum servo (speed and phase)		▷▷▷	
Capstan speed servo			
Capstan phase servo			
Capstan servo (speed and phase)			
Ref. signal		▷»	

(See Page 111)

(See Page 113)

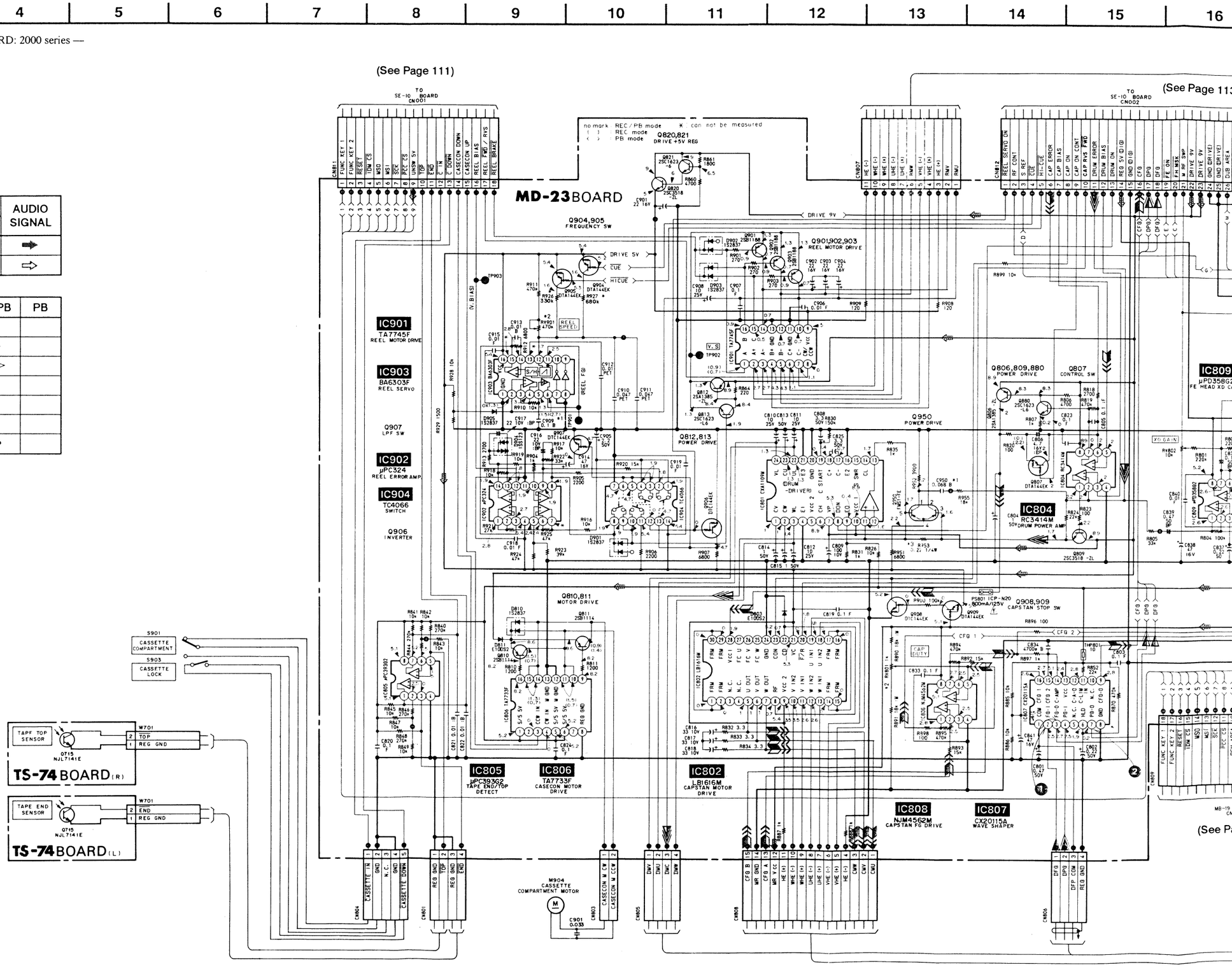

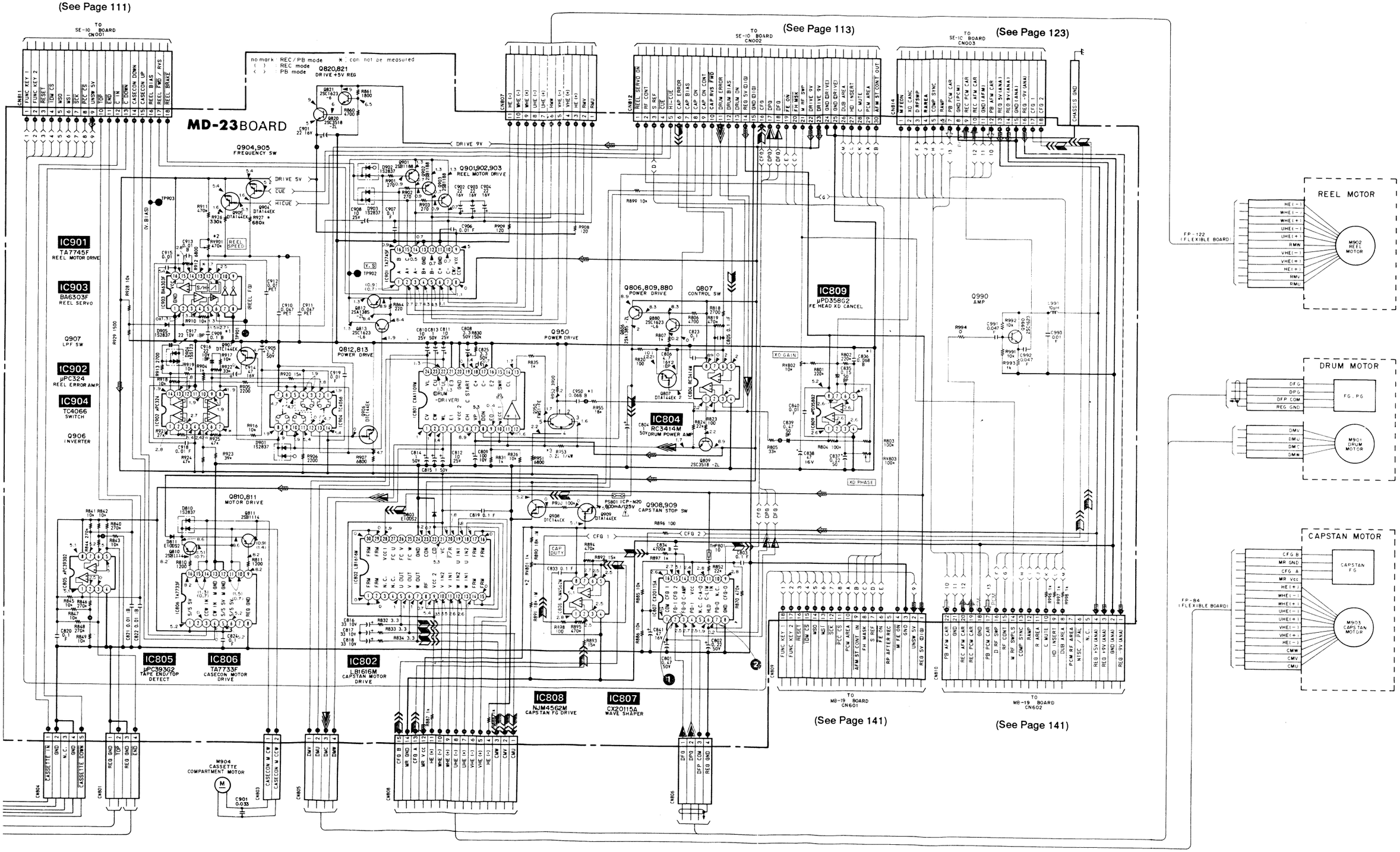
(See Page 111)
(See Page 113)
(See Page 123)
MD-23 BOARD
TO SE-10 BOARD CN001
TO SE-10 BOARD CN002
TO SE-1C BOARD CN003
no mark : REC/PB mode
( ) : REC mode
< > : PB mode
* : can not be measured
Q820,821 DRIVE +5V REG
Q904,905 FREQUENCY SW
Q901,902,903 REEL MOTOR DRIVE
Q806,809,880 POWER DRIVE
Q807 CONTROL SW
Q812,813 POWER DRIVE
Q950 POWER DRIVE
Q810,811 MOTOR DRIVE
Q908,909 CAPSTAN STOP SW
Q990 AMP
IC901 TA7745F REEL MOTOR DRIVE
IC903 BA6303F REEL SERVO
IC902 μPC324 REEL ERROR AMP
IC904 TC4066 SWITCH
IC805 μPC393G2 TAPE END/TOP DETECT
IC806 TA7733F CASECON MOTOR DRIVE
IC802 LB1616M CAPSTAN MOTOR DRIVE
IC808 NJM4562M CAPSTAN FG DRIVE
IC807 CX20115A WAVE SHAPER
IC809 μPD358G2 FE HEAD XO CANCEL
IC804 RC3414M 50V DRUM POWER AMP
Q907 LPF SW
Q906 INVERTER
REEL MOTOR
DRUM MOTOR
CAPSTAN MOTOR
M902 REEL MOTOR
M901 DRUM MOTOR
M903 CAPSTAN MOTOR
M904 CASSETTE COMPARTMENT MOTOR
FP-122 (FLEXIBLE BOARD)
FP-84 (FLEXIBLE BOARD)
TO MB-19 BOARD CN601
TO MB-19 BOARD CN602
(See Page 141)
(See Page 141)
DRIVE 9V
DRIVE 5V
CUE
HICUE
REEL SPEED
V.S
CAP DUTY
CFG 1
CFG 2
XO GAIN
XO PHASE

RS-31 (REEL SENSOR), LD-1 (TAPE SENSOR), MS-4 (CONTROL MOTOR, MODE SWITCH), LS-9 (LOADING SWITCH) PRINTED WIRING BOARDS

— Ref. No. RS-31, LD-1 BOARD: 6000 series —

MS-4, LS-9 boards is replaced as a block, so that the PRINTED WIRING BOARD of it is omitted.

* A-7061-818-A RS-31 BOARD, COMPLETE
****

〈 DIODE 〉

D320 8-719-800-76 DIODE 1SS226
D321 8-719-800-76 DIODE 1SS226

〈 IC 〉

IC301 8-759-908-81 IC MB3763PF
IC302 8-759-908-81 IC MB3763PF

〈 TRANSISTOR 〉

Q301 8-729-805-25 TRANSISTOR 2SB1121
Q302 8-729-216-22 TRANSISTOR 2SA1162
Q303 8-729-216-22 TRANSISTOR 2SA1162
Q304 8-729-216-22 TRANSISTOR 2SA1162
Q305 8-729-901-01 TRANSISTOR DTC144EK

Q306 8-729-901-01 TRANSISTOR DTC144EK
Q307 8-729-901-01 TRANSISTOR DTC144EK

RS-31 BOARD (COMPONENT SIDE)

D320 B-2
D321 A-1

IC301 D-1
IC302 C-1

Q301 A-2
Q302 A-1
Q303 A-1
Q304 A-1
Q305 D-2
Q306 B-2
Q307 B-1

RS-31 BOARD (COMPONENT SIDE)

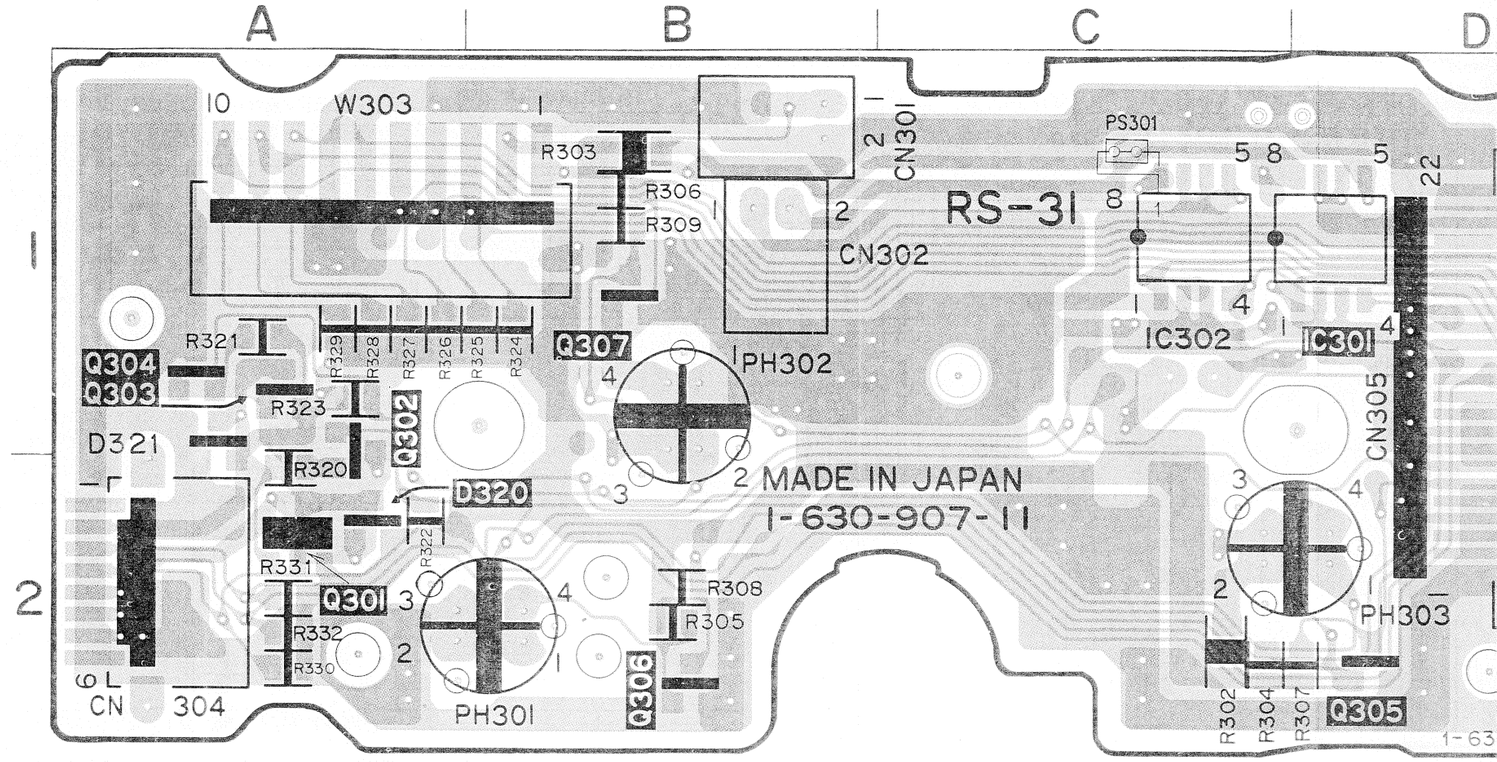

ARD: 6000 series —

ced as a block, so that the PRINTED WIRING BOARD of it is omitted.

RS-31 BOARD (COMPONENT SIDE)

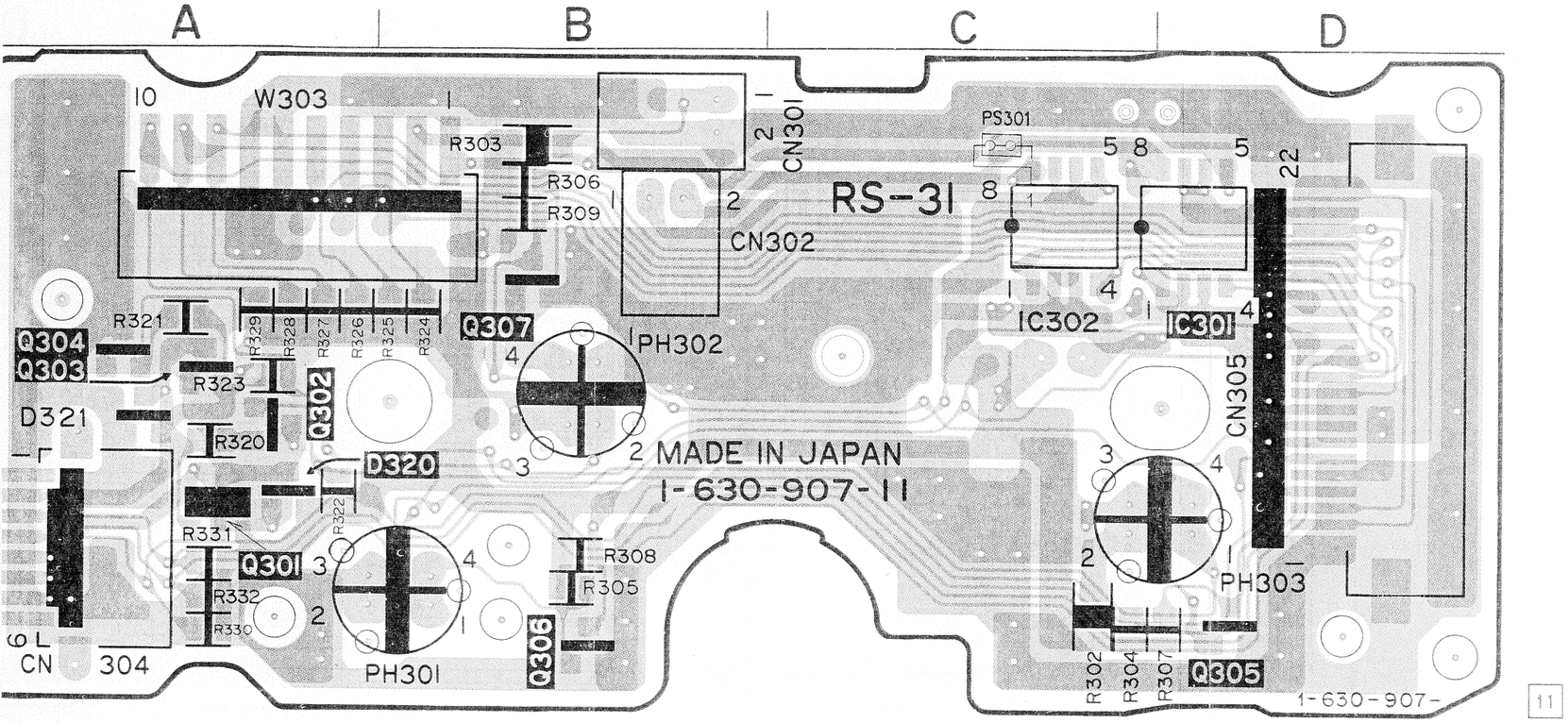

11

LD-1 BOARD (CONDUCTOR SIDE)

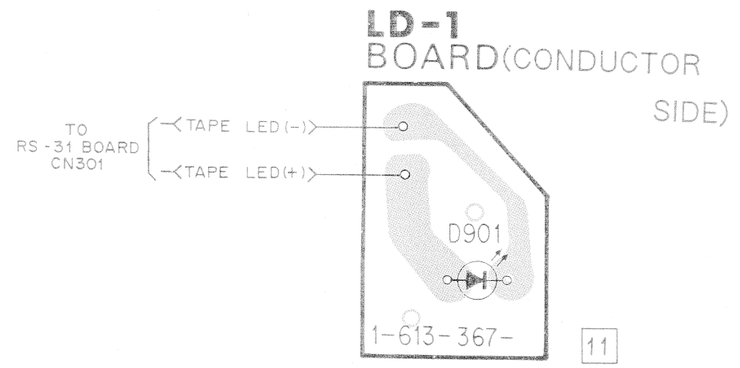

11

* A-7070-024-A LD-1 BOARD, COMPLETE
****

〈 DIODE 〉

D901 8-719-928-54 DIODE GL-450S

— Ref. No. RS-31, LD-1 BOARD: 6000 series —

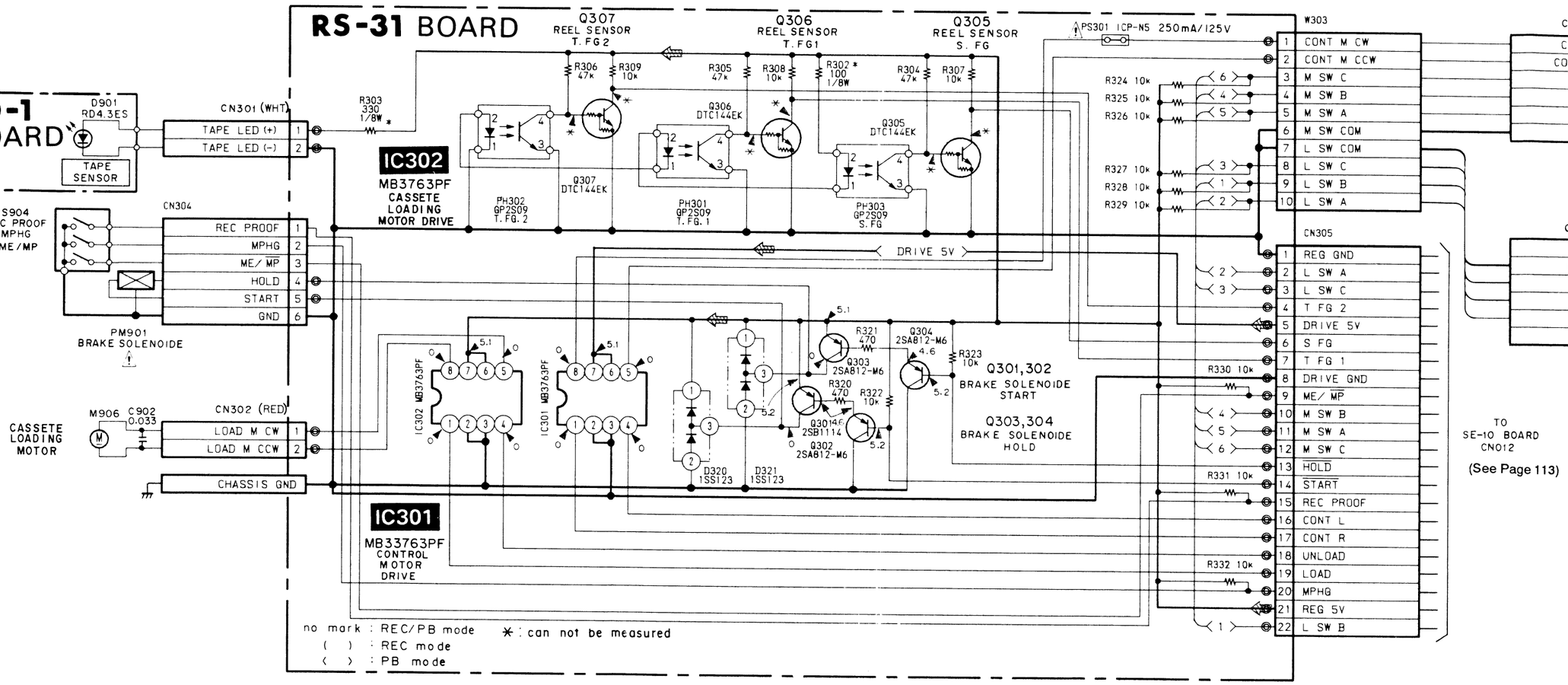

9 (LOADING SWITCH) SCHEMATIC DIAGRAMS

7 | 8 | 9 | 10 | 11 | 12 | 13 | 14 | 15 | 16 | 17 | 18 | 19 | 20 | 21 | 22

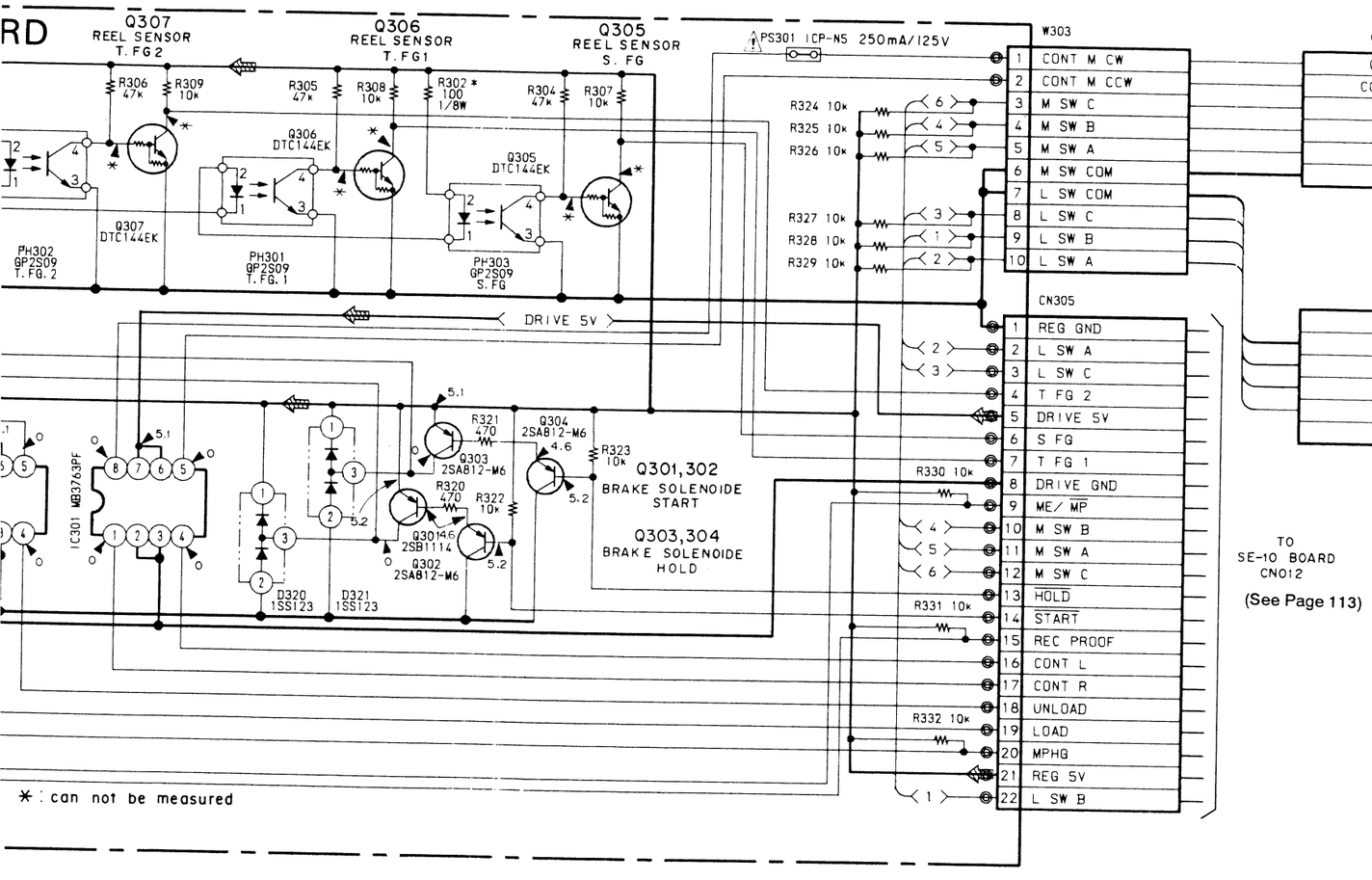

IC301, IC302 (MB3763PF)

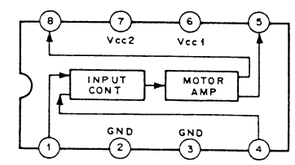

MB-19 (VTR FUNCTION SWITCH, AUDIO PROCESS) PRINTED WIRING BOARD

— Ref. No. MB-19 BOARD: 7000 series —

* A-7062-565-A MB-19 BOARD, COMPLETE
****

〈 DIODE 〉

D601	8-719-104-34	DIODE 1S2836
D602	8-719-104-34	DIODE 1S2836
D603	8-719-104-34	DIODE 1S2836
D604	8-719-400-18	DIODE MA152WK
D641	8-719-800-76	DIODE 1SS226
D642	8-719-800-76	DIODE 1SS226

〈 IC 〉

IC601	8-759-149-34	IC uPD75106G-591-1B
IC603	8-759-300-71	IC TC4053BFHB
IC651	8-759-603-27	IC M5201FP
IC661	8-759-603-27	IC M5201FP
IC671	8-741-150-50	IC SBX1505

〈 TRANSISTOR 〉

Q601	8-729-901-06	TRANSISTOR DTA144EK
Q602	8-729-901-01	TRANSISTOR DTC144EK
Q603	8-729-901-01	TRANSISTOR DTC144EK
Q604	8-729-901-01	TRANSISTOR DTC144EK
Q605	8-729-901-06	TRANSISTOR DTA144EK
Q606	8-729-901-06	TRANSISTOR DTA144EK
Q607	8-729-901-01	TRANSISTOR DTC144EK
Q608	8-729-901-01	TRANSISTOR DTC144EK
Q609	8-729-901-06	TRANSISTOR DTA144EK
Q671	8-729-100-66	TRANSISTOR 2SC1623

MB-19 BOARD (COMPONENT SIDE)

IC602	C-3
IC671	F-4

MB-19 BOARD (CONDUCTOR SIDE)

D601	C-4
D602	C-2
D603	C-2
D604	C-1
D641	F-5
D642	F-5
IC601	B-2
IC603	C-2
IC651	E-2
IC661	E-2
Q601	B-3
Q602	A-3
Q603	A-3
Q604	C-2
Q605	C-2
Q606	C-3
Q607	B-3
Q608	D-4
Q609	D-4
Q671	E-5

MB-19 BOARD (COMPONENT SIDE)

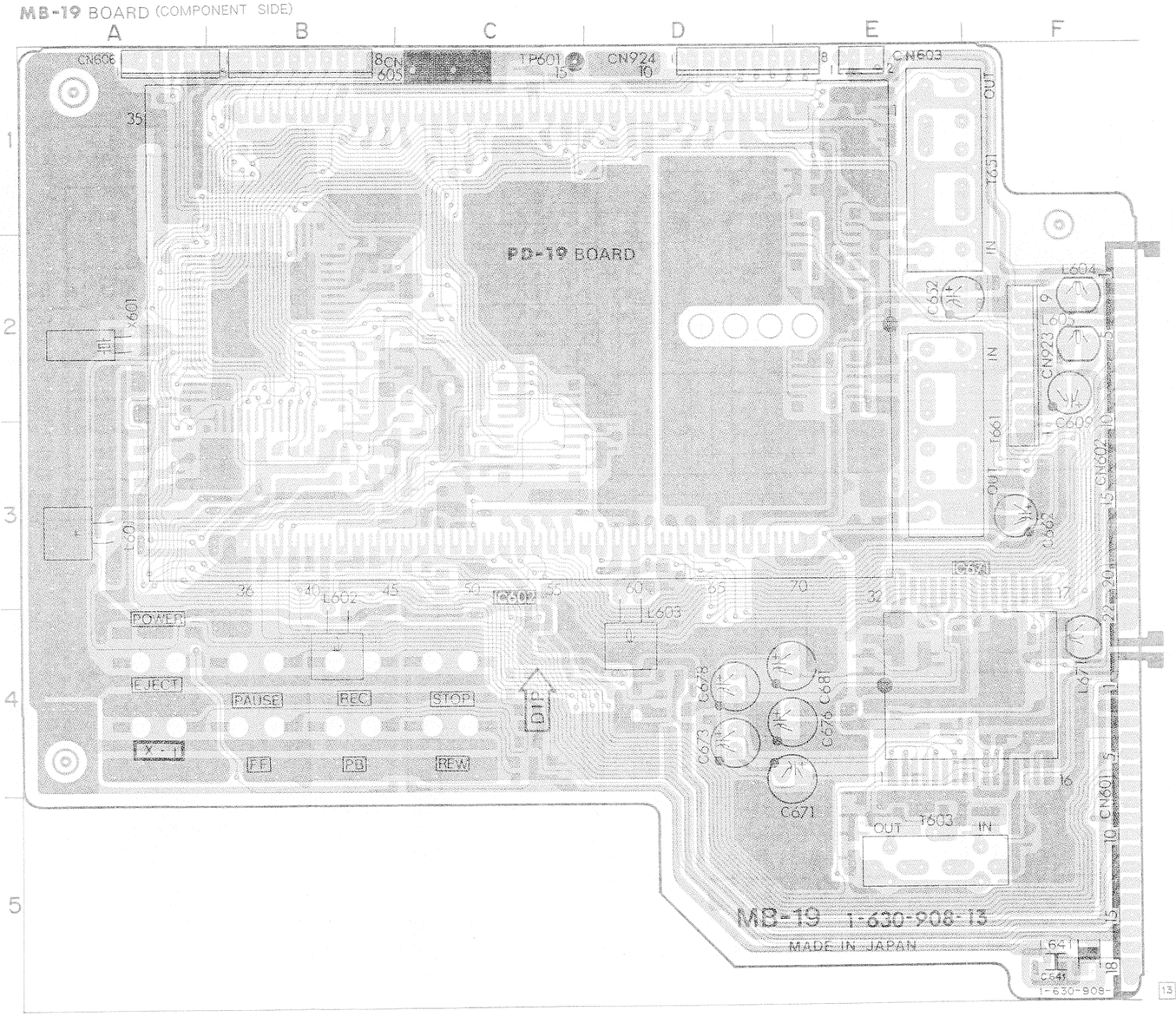

MB-19 BOARD (CONDUCTOR SIDE)

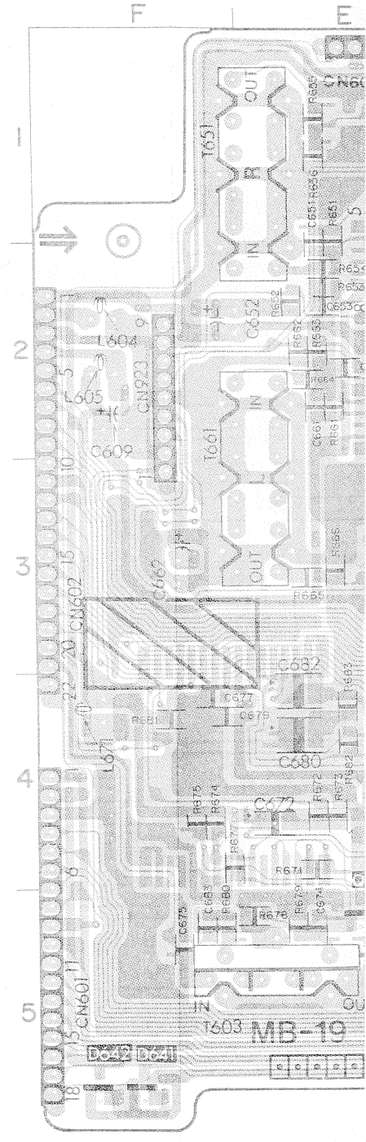

SIDE)

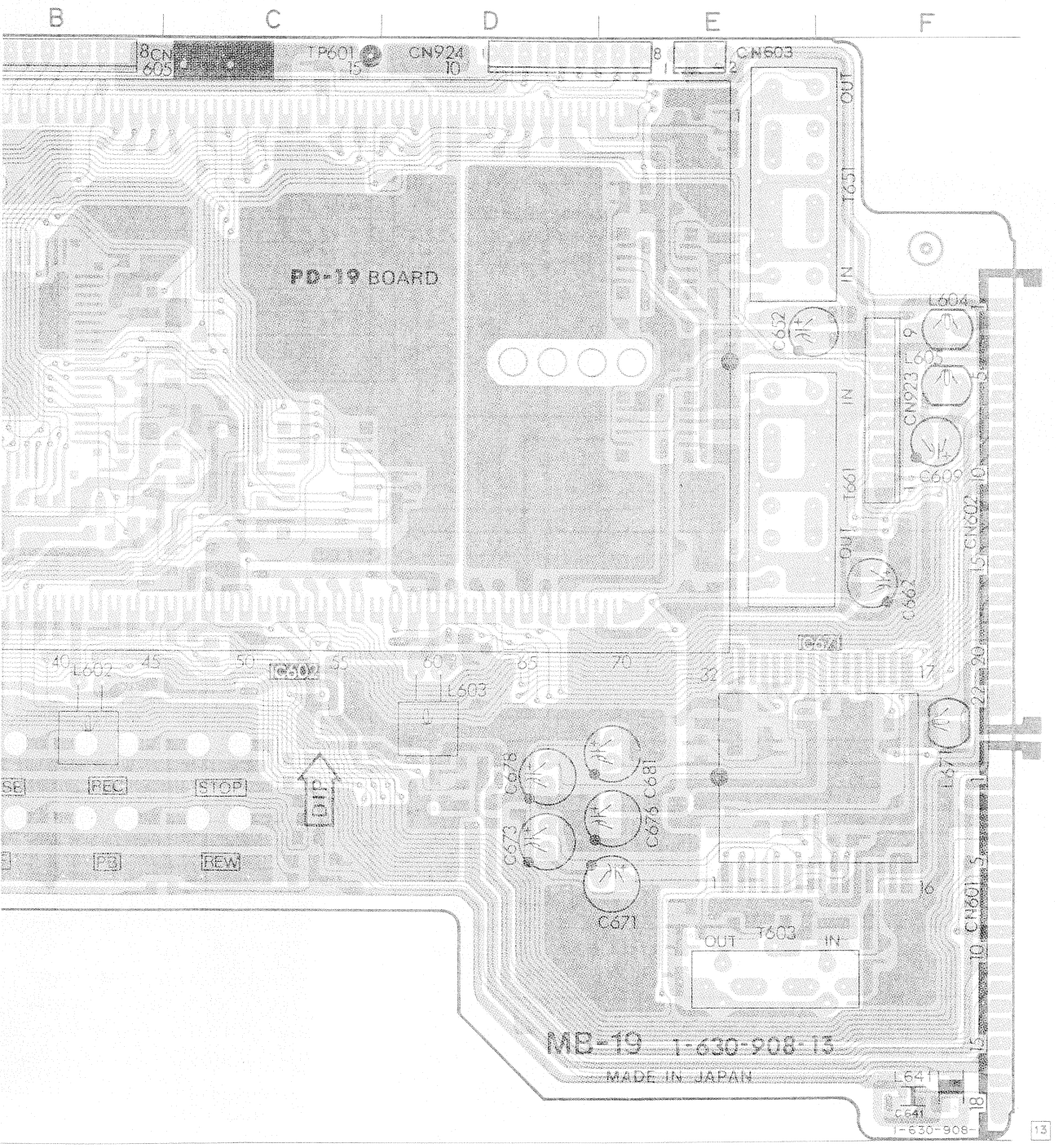

MB-19 BOARD (CONDUCTOR SIDE)

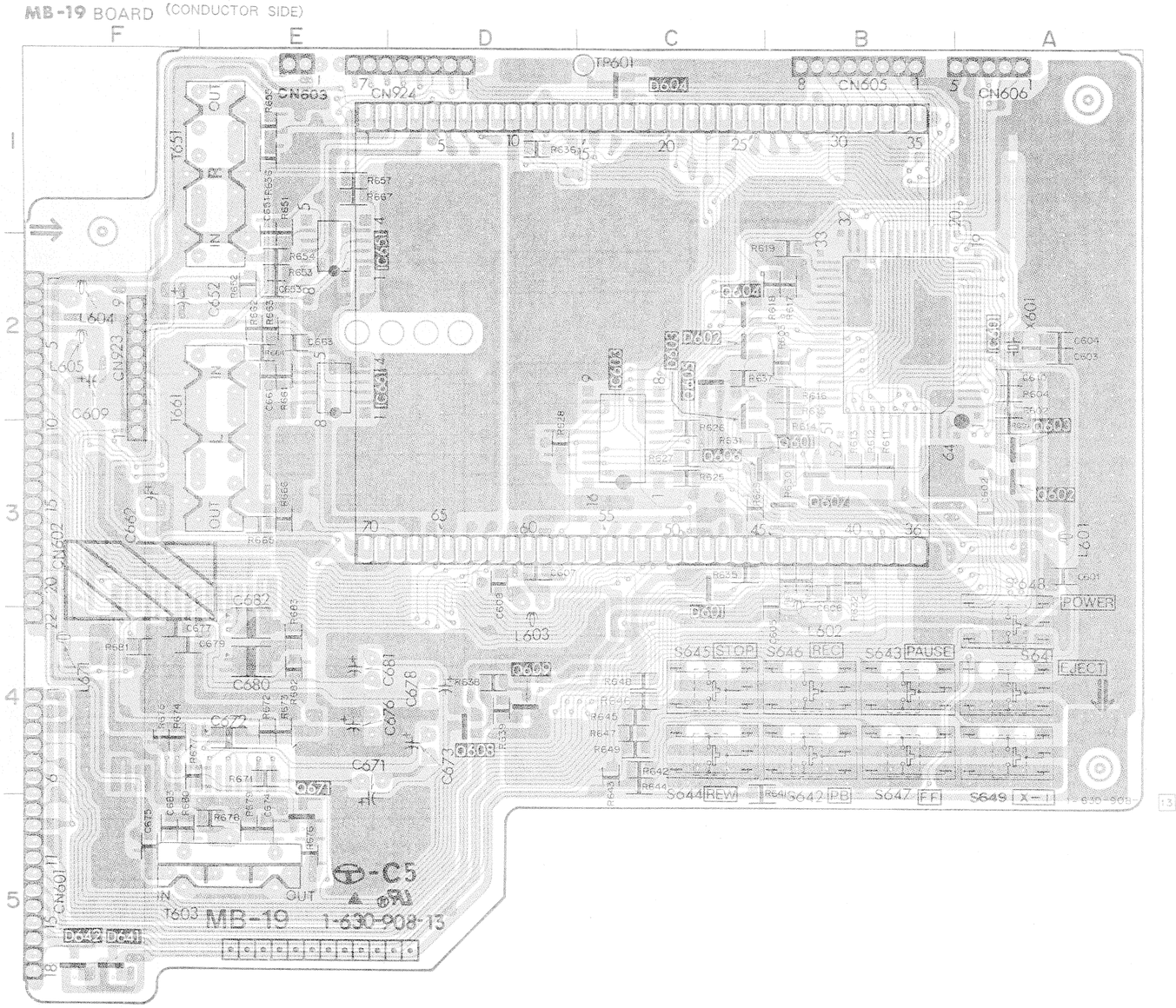

— Ref. No. MB-19 BOARD: 7000 series —

(See Page 131)

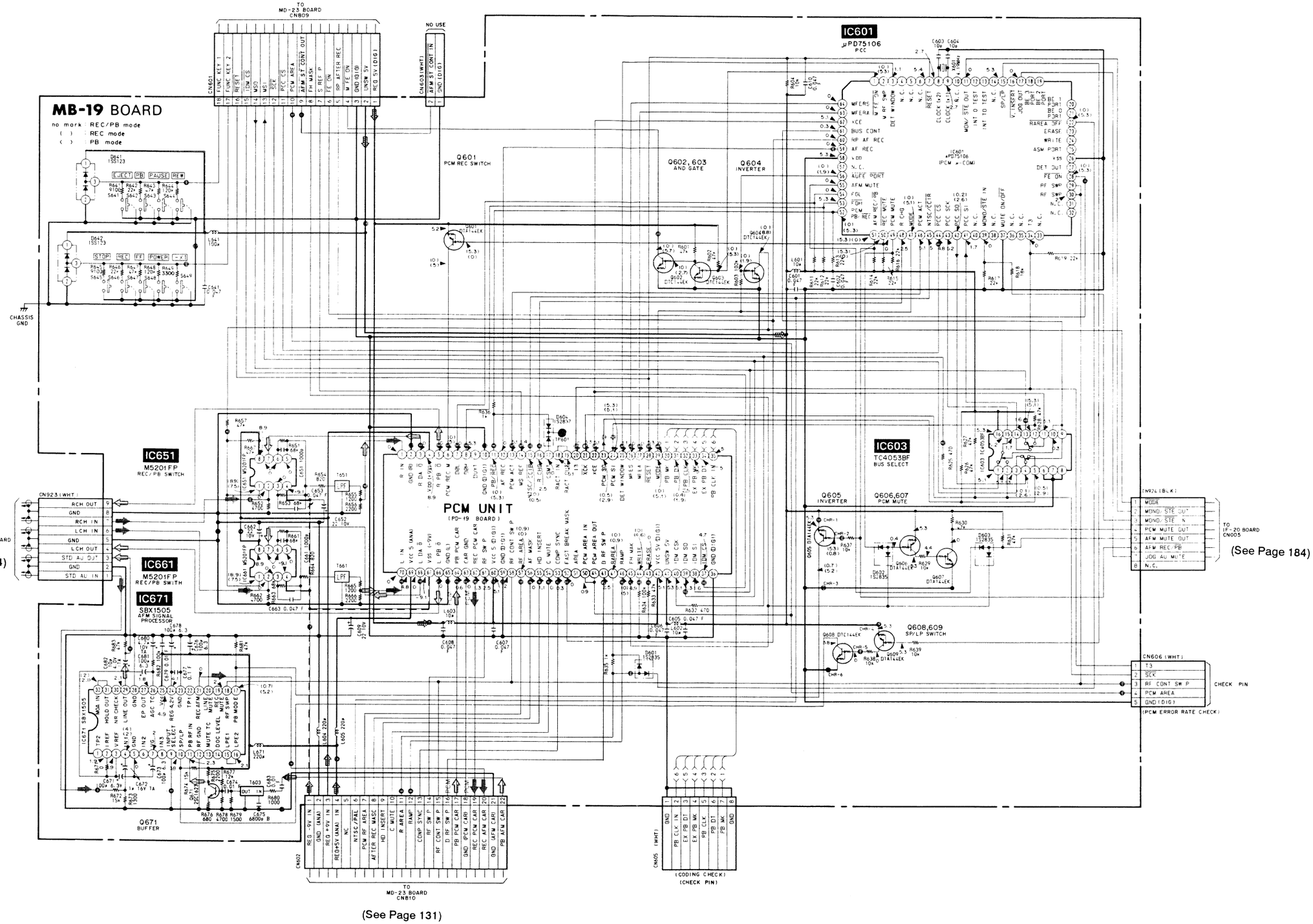

7 | 8 | 9 | 10 | 11 | 12 | 13 | 14 | 15 | 16 | 17 | 18 | 19 | 20 | 21 | 22

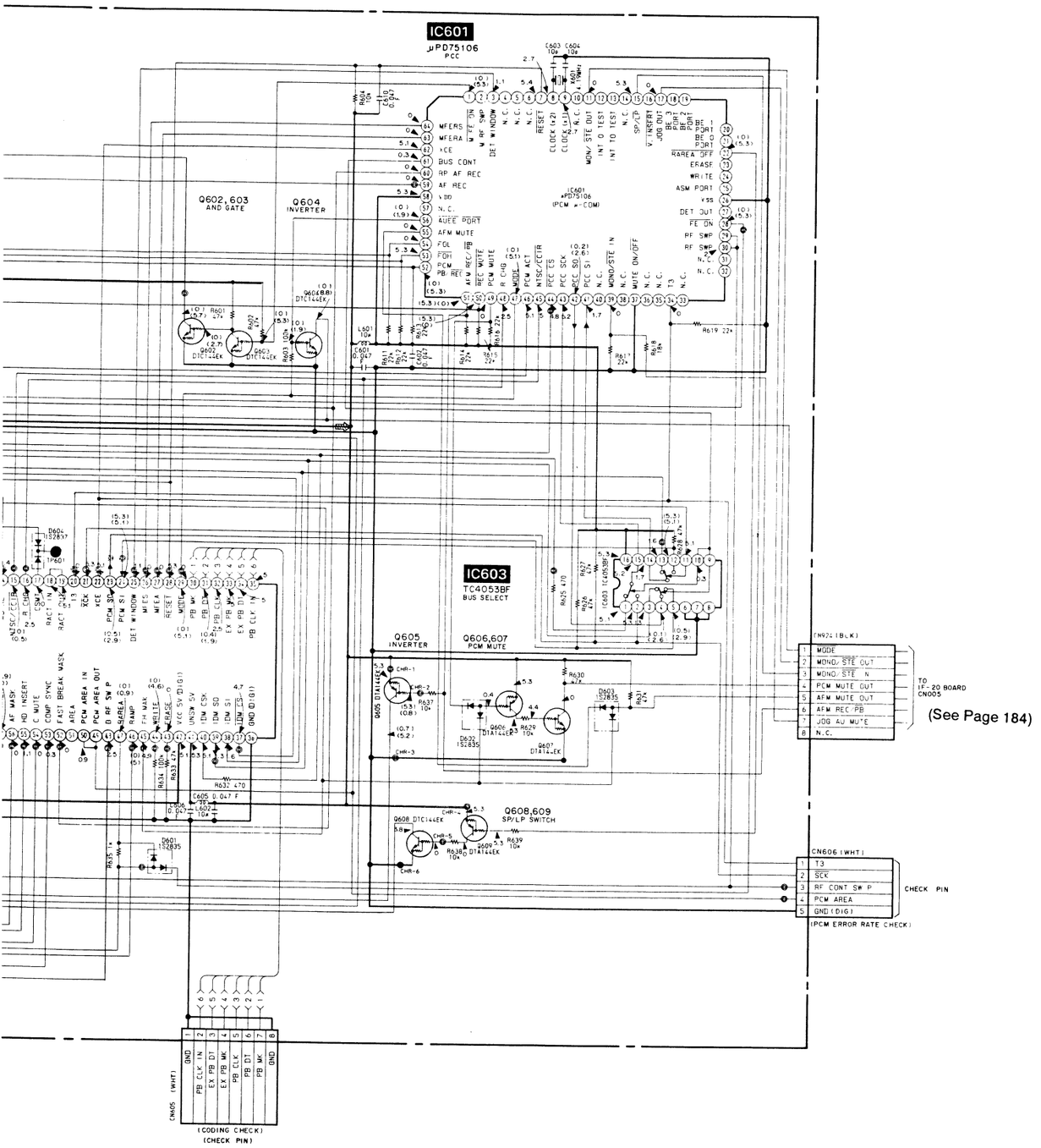

IC651, IC661 (M5201FP)

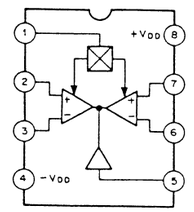

- **SIGNAL PATH**

	VIDEO SIGNAL			AUDIO SIGNAL
	CHROMA	Y	Y/CHROMA/DATA	
REC				➡
PB				⇨

PD-19 BOARD

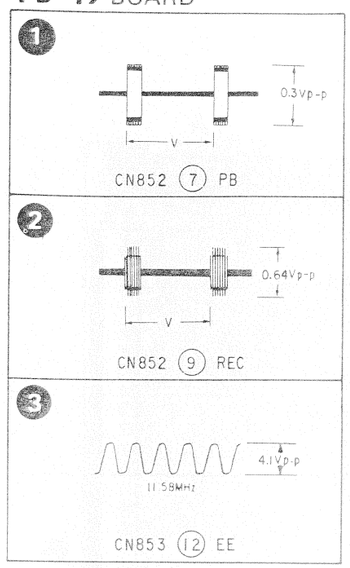

* A-7061-825-A PD-19 BOARD, COMPLETE
****

〈 DIODE 〉

D851	8-719-104-34 DIODE 1S2836
D852	8-719-400-18 DIODE MA152WK
D853	8-719-400-18 DIODE MA152WK

〈 IC 〉

IC851	8-752-324-45 IC CXD1066Q-Z
IC852	8-759-929-17 IC CXD1051M
IC853	8-752-010-30 IC CX20103
IC854	8-752-010-20 IC CX20102
IC855	8-752-331-00 IC CXK5864BM-12L
IC856	8-759-948-61 IC CX23011-C
IC857	8-759-911-19 IC CX23012
IC858	8-759-972-12 IC CF77305FT
IC859	8-752-809-68 IC CXP5024H-079Q
IC860	8-759-972-13 IC CF77309FR

〈 TRANSISTOR 〉

Q851	8-729-102-07 TRANSISTOR 2SC2223
Q852	8-729-122-63 TRANSISTOR 2SA1226
Q853	8-729-102-06 TRANSISTOR 2SC2223
Q853	8-729-102-07 TRANSISTOR 2SC2223

PD-19 BOARD (COMPONENT SIDE)

D851	A-2
D852	B-3
D853	C-2
IC851	C-3
IC852	B-2
IC856	C-1
IC857	B-1
IC858	D-2
Q851	B-3

PD-19 BOARD (CONDUCTOR SIDE)

IC853	A-1
IC854	A-2
IC855	C-1
IC859	D-1
IC860	C-2
Q852	A-3
Q853	A-3

PD-19 (PCM AUDIO PROCESS), PA-27 (PCM AUDIO PROCESS) PRINTED WIRING BOARDS

— Ref. No. PD-19, PA-27 BOARD: 7000 series —

PD-19 BOARD (COMPONENT SIDE)

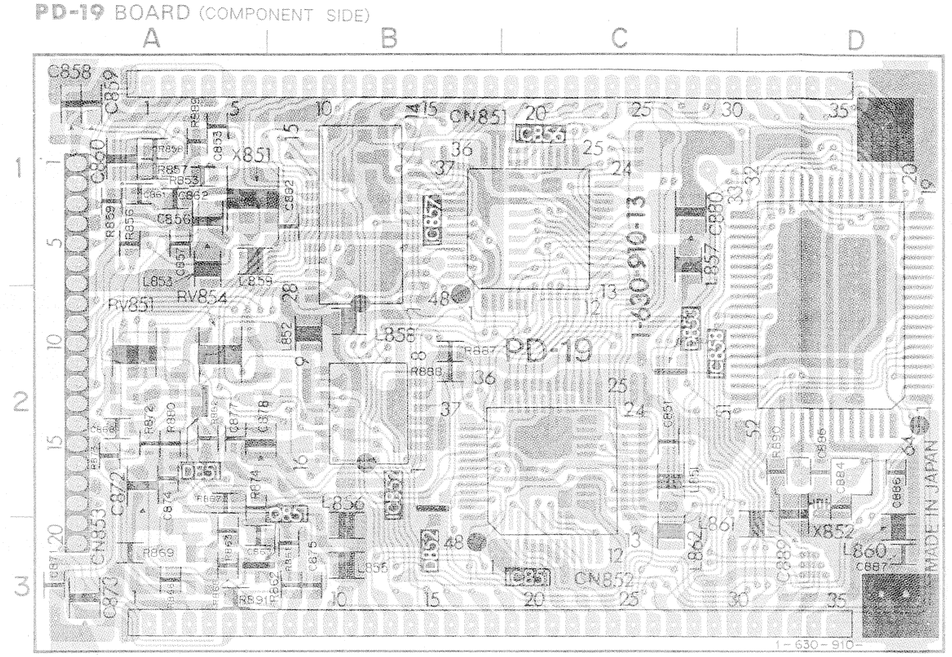

* A-7061-826-A PA-27 BOARD, COMPLETE
****

〈 DIODE 〉

D031	8-719-104-34 DIODE 1S2836
D032	8-719-104-34 DIODE 1S2836
D033	8-719-104-34 DIODE 1S2836

〈 IC 〉

IC001	8-752-009-90 IC CX20099
IC002	8-759-981-92 IC NJM4558M
IC003	8-759-981-92 IC NJM4558M
IC004	8-752-322-57 IC CXD1077M
IC005	8-759-908-15 IC TL431CLP

〈 TRANSISTOR 〉

Q001	8-729-202-38 TRANSISTOR 2SC3326N
Q002	8-729-202-38 TRANSISTOR 2SC3326N
Q031	8-729-901-06 TRANSISTOR DTA144EK
Q032	8-729-901-06 TRANSISTOR DTA144EK
Q033	8-729-901-06 TRANSISTOR DTA144EK
Q034	8-729-216-22 TRANSISTOR 2SA1162
Q035	8-729-216-22 TRANSISTOR 2SA1162
Q051	8-729-202-38 TRANSISTOR 2SC3326N
Q052	8-729-202-38 TRANSISTOR 2SC3326N

PA-27 BOARD (COMPONENT SIDE)

D033	B-1
IC001	C-2
IC002	B-3
IC003	B-1
IC004	A-2
IC005	A-3

PA-27 BOARD (CONDUCTOR SIDE)

D031	A-2
D032	B-2
Q001	B-3
Q002	B-2
Q031	A-1
Q032	A-1
Q033	A-2
Q034	A-2
Q035	A-2
Q051	B-1
Q052	B-1

PA-27 BOARD (COMPONENT SIDE)

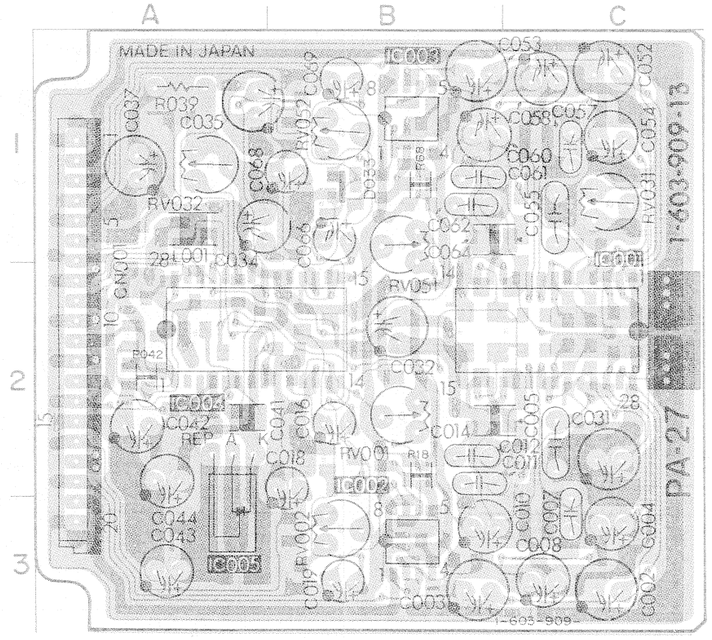

PA-27 BOARD (

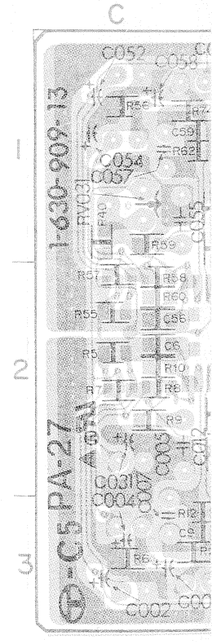

PD-19 (PCM AUDIO PROCESS), PA-27 (PCM AUDIO PROCESS) PRINTED WIRING BOARDS

— Ref. No. PD-19, PA-27 BOARD: 7000 series —

PD-19 BOARD (COMPONENT SIDE)

D851 A-2
D852 B-3
D853 C-2

IC851 C-3
IC852 B-2
IC856 C-1
IC857 B-1
IC858 D-2

Q851 B-3

PD-19 BOARD (CONDUCTOR SIDE)

IC853 A-1
IC854 A-2
IC855 C-1
IC859 D-1
IC860 C-2

Q852 A-3
Q853 A-3

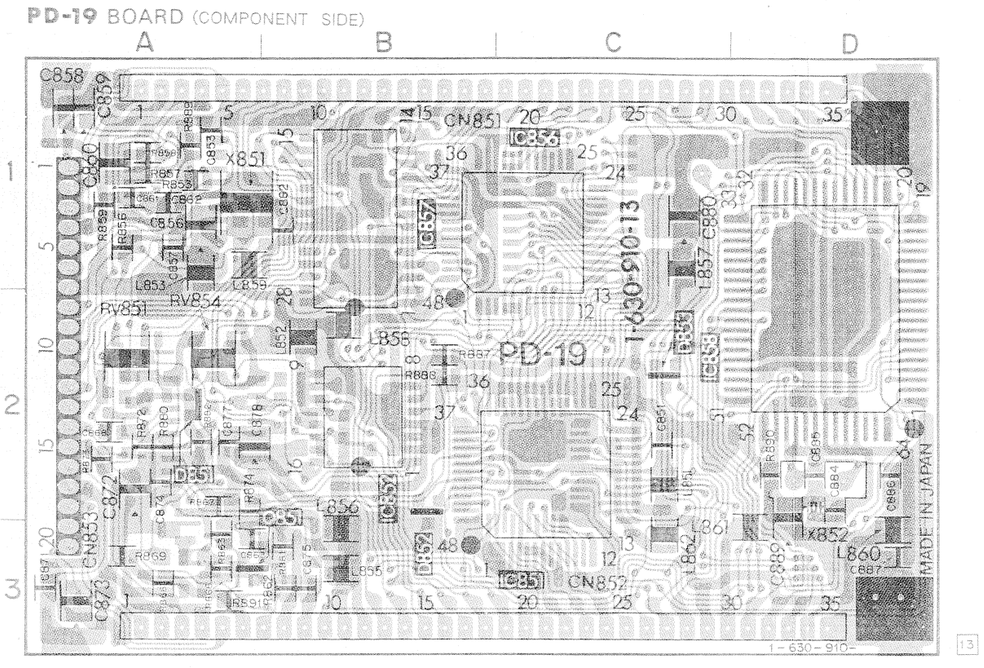

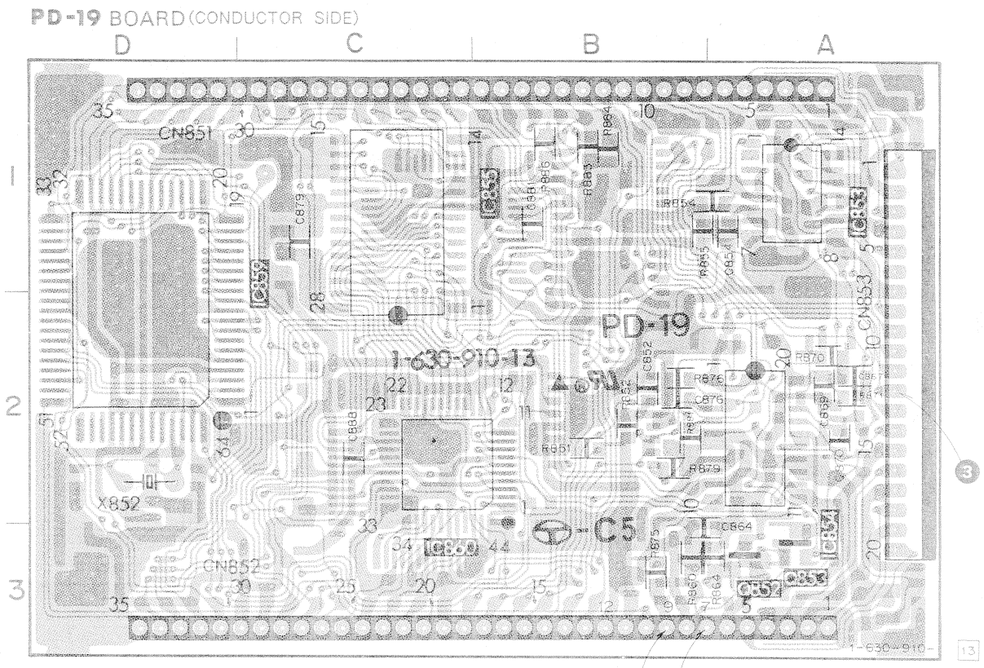

PA-27 BOARD (COMPONENT SIDE)

D033 B-1

IC001 C-2
IC002 B-3
IC003 B-1
IC004 A-2
IC005 A-3

PA-27 BOARD (CONDUCTOR SIDE)

D031 A-2
D032 B-2

Q001 B-3
Q002 B-2
Q031 A-1
Q032 A-1
Q033 A-2
Q034 A-2
Q035 A-2
Q051 B-1
Q052 B-1

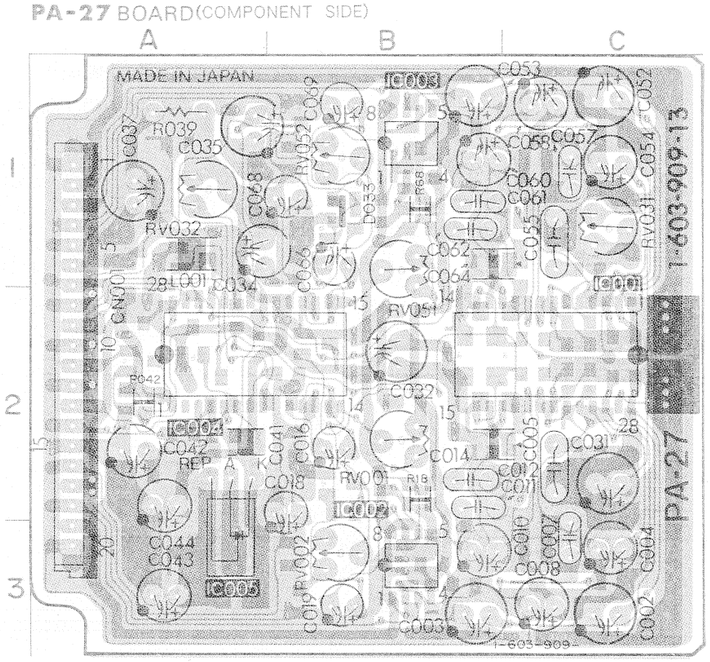

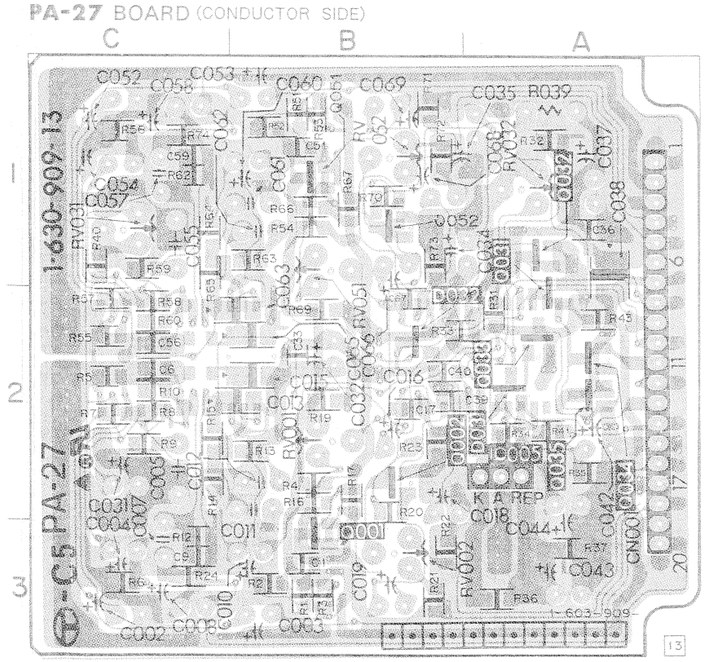

— Ref. No. PD-19, PA-27 BOARD: 7000 series —

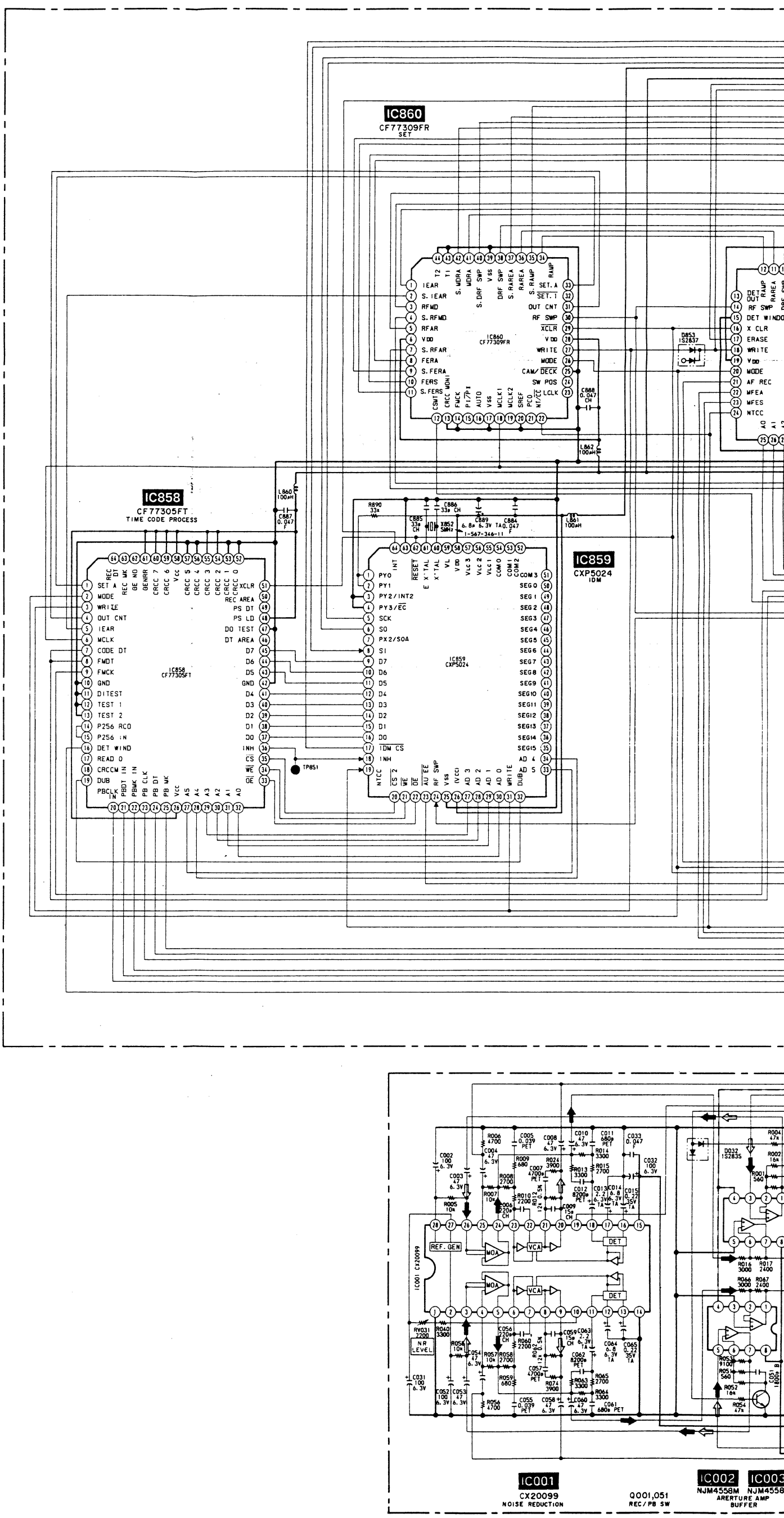

(See Page 141)

TO MB-19 BOARD (36) (70)

CN852 35P 1-565-107-11

IC851 CXD1065Q MULTI/INDEX PROCESS

IC852 CXD1051M DUB TIMING PULSE

IC853 CX20013 CLOCK GENERATOR

IC854 CX20102 PCM RF

Q851,852,853 PCM AMP

IC859 CXP5024 IDM

IC855 CXK5864M RAM

IC856 CX23011 PCM PROCESS

IC857 CX23012 PCM PROCESS

TO MB-19 BOARD (35) (1)

CN851 35P 1-565-107-11

CN001

20	L PB OUT
19	Vss
18	L IN
17	Vcc +5V
16	L DA OUT
15	GND
14	AU EE
13	MODE
12	WCK
11	AD/DA DATA
10	BCK
9	WCK
8	PCM REC W
7	GND
6	N.C.
5	R DA IN
4	GND
3	R OUT
2	VDD +9V
1	R PB IN

Q032,031 MODE SW

Q034,035 SWITCH

Q033 INVERTER

IC001 CX20099 NOISE REDUCTION

Q001,051 REC/PB SW

IC002 IC003 NJM4558M NJM4558M ARERTURE AMP BUFFER

Q002,052 PCM REC MUTE

IC004 CXD1077M A-D/D-A CONVERTER

PA-27 BOARD

6 | 7 | 8 | 9 | 10 | 11 | 12 | 13 | 14 | 15 | 16 | 17

(See Page 141)

(36) TO MB-19 BOARD (70)

IC860
CF77309FR
SET

IC851
CXD1065Q
MULTI/INDEX PROCESS

IC852
CXD1051M
DUB TIMING PULSE

IC853
CX20013
CLOCK GENERATOR

IC854
CX20102
PCM RF

Q851,852,853
PCM AMP

IC859
CXP5024
IDM

IC855
CXK5864M
RAM

IC856
CX23011
PCM PROCESS

IC857
CX23012
PCM PROCESS

(35) TO MB-19 BOARD (1)

IC001
CX20099
NOISE REDUCTION

Q001,051
REC/PB SW

IC002 **IC003**
NJM4558M NJM4558M
ARERTURE AMP
BUFFER

Q002,052
PCM REC MUTE

IC004
CXD1077M
A-D/D-A CONVERTER

Q032,031
MODE SW

Q034,035
SWITCH

Q033
INVERTER

PA-27 BOARD

16 | 17 | 18 | 19 | 20 | 21 | 22 | 23 | 24 | 25 | 26 | 27

(page 141)

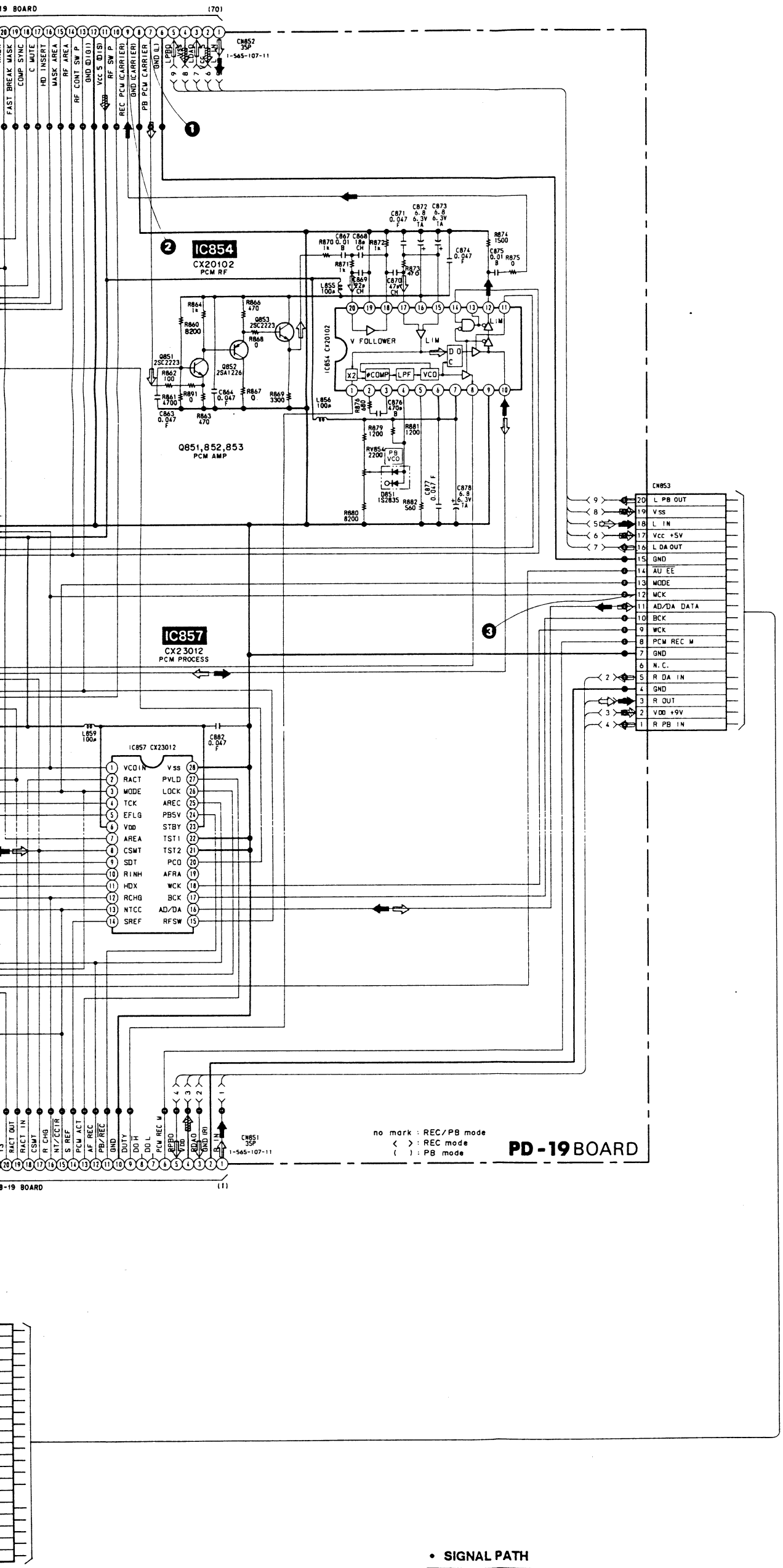

- **SIGNAL PATH**

	VIDEO SIGNAL			AUDIO SIGNAL
	CHROMA	Y	Y/CHROMA/DATA	
REC				➡
PB				⇨

IF-20 BOARD (1/4)

1

IC331 (7), IC401 (1) REC

2
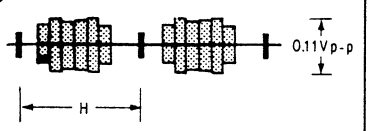

IC332 (7) REC

3
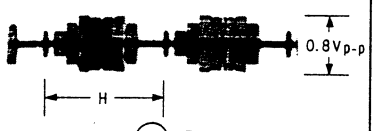

IC402 (1) REC

4
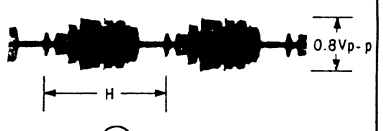

IC402 (3), TP503 PB

5

TP501, TP601 PB

6
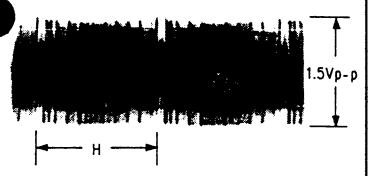

TP603 PB

• **SIGNAL PATH**

	VIDEO SIGNAL			AUDIO SIGNAL
	CHROMA	Y	Y/CHROMA/DATA	
REC	➡	➡	➡	
PB	⇨	⇨		

IF-20 (VIDEO SIGNAL SELECT, SHARPNESS, NOISE CANCEL) SCHEMATIC DIAGRAM

— Ref. No. IF-20 BOARD: 8000 series —

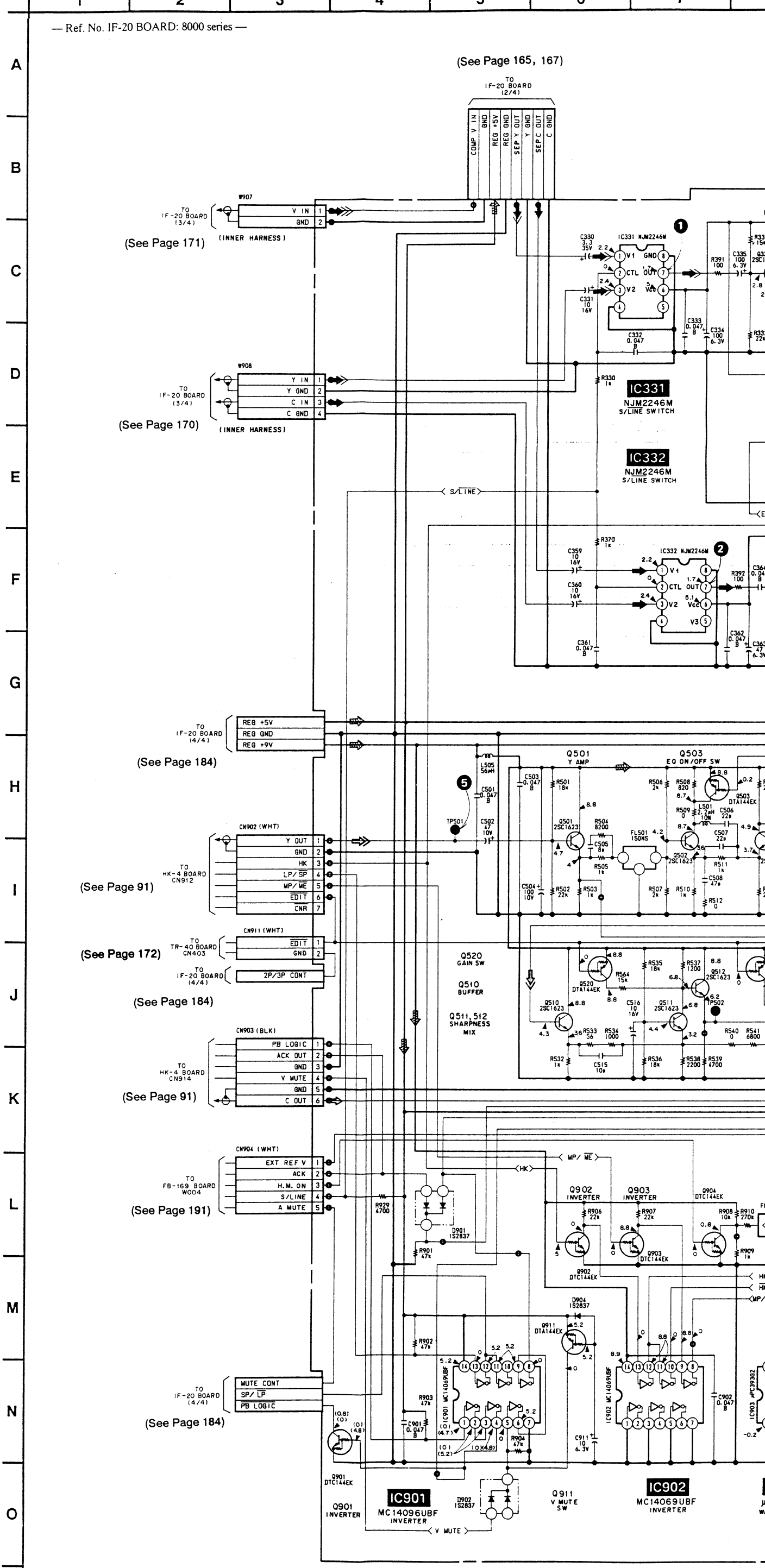

(See Page 91)

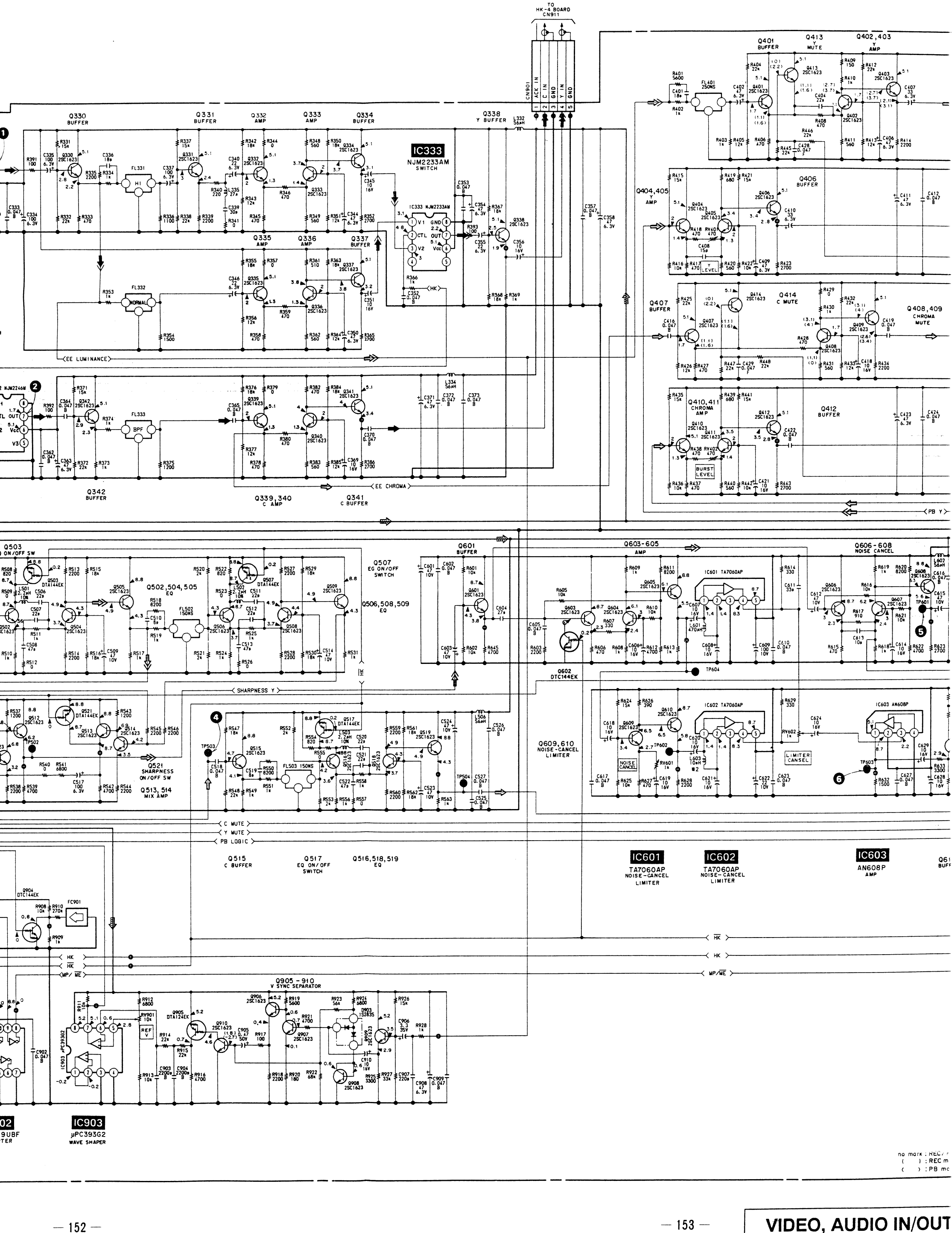

no mark : REC/P
( ) : REC m
( ) : PB mo

5 6 7 8 9 10 11 12 13 14 15 16

(See Page 165, 167)

(See Page 91)

TO IF-20 BOARD (2/4)

COMP V IN | GND | REG +5V | REG GND | SEP Y OUT | GND | SEP C OUT | C GND

TO HK-4 BOARD CN911

CN901: 1 ACK IN | 2 C IN | 3 GND | 4 Y IN | 5 GND

IC331 NJM2246M S/LINE SWITCH

IC332 NJM2246M S/LINE SWITCH

IC333 NJM2233AM SWITCH

Q330 BUFFER | Q331 BUFFER | Q332 AMP | Q333 AMP | Q334 BUFFER | Q335 AMP | Q336 AMP | Q337 BUFFER | Q338 Y BUFFER

FL331 | FL332 | FL333 | FL401 250NS

Q404,405 Y AMP | Q407 BUFFER | Q410,411 CHROMA AMP

Q342 BUFFER | Q339,340 C AMP | Q341 C BUFFER

Q501 Y AMP | Q502,504,505 EQ | Q503 EQ ON/OFF SW | Q506,508,509 EQ | Q507 EQ ON/OFF SWITCH

Q520 GAIN SW | Q510 BUFFER | Q511,512 SHARPNESS MIX | Q521 SHARPNESS ON/OFF SW | Q513,514 MIX AMP

Q515 C BUFFER | Q517 EQ ON/OFF SWITCH | Q516,518,519 EQ

Q601 BUFFER | Q602 DTC144EK | Q603-605 AMP | Q609,610 NOISE-CANCEL LIMITER

IC601 TA7060AP NOISE-CANCEL LIMITER | IC602 TA7060AP NOISE-CANCEL LIMITER

Q902 INVERTER | Q903 INVERTER | Q904 DTC144EK | Q911 V MUTE SW

Q905-910 V SYNC SEPARATOR

IC902 MC14069UBF INVERTER | IC903 μPC393G2 WAVE SHAPER

S/LINE | EE LUMINANCE | EE CHROMA | SHARPNESS Y | C MUTE | Y MUTE | PB LOGIC | HK | MP/ME | V MUTE

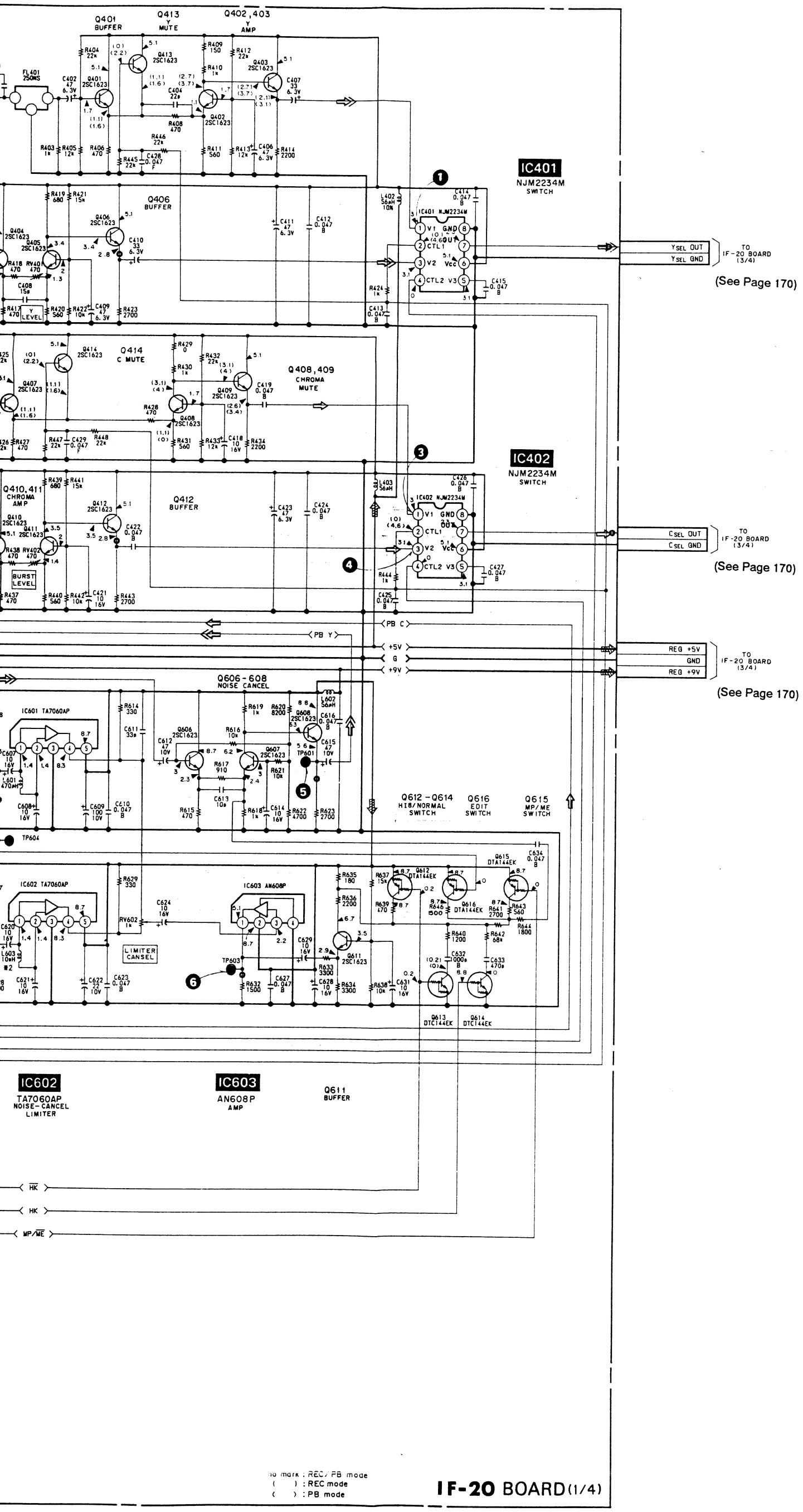
Q401 BUFFER
Q413 Y MUTE
Q402,403 Y AMP
IC401 NJM2234M SWITCH
IC402 NJM2234M SWITCH
Q406 BUFFER
Q414 C MUTE
Q408,409 CHROMA MUTE
Q410,411 CHROMA AMP
Q412 BUFFER
Q606-608 NOISE CANCEL
Q612-Q614 HI8/NORMAL SWITCH
Q616 EDIT SWITCH
Q615 MP/ME SWITCH
IC601 TA7060AP
IC602 TA7060AP
NOISE-CANCEL LIMITER
IC603 AN608P AMP
Q611 BUFFER
Y LEVEL
BURST LEVEL
LIMITER CANSEL
YSEL OUT
YSEL GND
CSEL OUT
CSEL GND
REG +5V
GND
REG +9V
TO IF-20 BOARD (3/4)
(See Page 170)
PB Y
PB C
+5V
G
+9V
HK
MP/ME
No mark : REC/PB mode
( ) : REC mode
( ) : PB mode
IF-20 BOARD (1/4)

— Ref. No. IF-20 BOARD: 8000 series, JB-4, JB-5, TR-40 BOARD: 3000 series —

IF-20 BOARD (COMPONENT SIDE)		IF-20 BOARD (CONDUCTOR SIDE)			
D001	F-2	D002	E-1	Q501	C-4
D004	F-1	D003	F-1	Q502	C-4
D060	H-2	D010	H-3	Q505	C-4
D165	H-2	D051	E-2	Q506	C-5
D166	H-1	D052	G-1	Q509	C-5
D168	G-2	D053	F-1	Q511	D-5
D169	H-1	D054	G-2	Q512	D-5
D170	G-1	D167	H-1	Q513	C-4
D171	G-2	D201	B-3	Q514	D-4
D904	D-3	D901	D-2	Q515	F-4
		D902	D-2	Q516	F-4
IC001	G-3	D903	A-5	Q519	F-4
IC003	E-3			Q520	D-5
IC004	E-1	IC601	D-4	Q601	D-4
IC005	F-1	IC602	D-5	Q602	D-4
IC006	G-1	IC603	E-5	Q603	D-4
IC051	H-3	IC701	H-4	Q604	D-4
IC054	E-2	IC702	H-5	Q605	D-4
IC055	F-2	IC703	G-5	Q606	E-5
IC056	G-2	IC704	G-4	Q608	E-5
IC165	G-1	IC801	I-4	Q609	D-5
IC201	A-2	IC802	J-4	Q610	D-5
IC202	B-2			Q611	E-5
IC331	A-4	Q002	E-2	Q612	E-5
IC332	B-4	Q003	E-1	Q613	E-5
IC333	A-5	Q004	F-1	Q615	E-5
IC401	F-5	Q005	F-1	Q616	D-5
IC402	H-4	Q007	G-2	Q701	H-5
IC705	G-5	Q051	E-2	Q706	H-5
IC901	D-2	Q052	F-2	Q712	J-5
IC902	D-2	Q053	F-2	Q713	I-5
IC903	C-5	Q054	F-2	Q714	I-5
		Q055	F-2	Q715	H-5
Q001	E-1	Q056	G-2	Q719	G-5
Q006	G-2	Q061	H-2	Q720	G-5
Q008	G-1	Q165	H-2	Q723	J-5
Q010	H-3	Q167	H-2	Q726	I-5
Q011	H-2	Q168	H-2	Q727	I-5
Q057	G-2	Q169	H-3	Q902	D-1
Q060	H-3	Q170	H-1	Q903	D-2
Q166	H-2	Q171	H-1	Q904	C-5
Q179	H-1	Q172	G-2	Q905	B-5
Q180	H-1	Q174	H-1	Q908	A-5
Q182	H-2	Q175	H-1	Q909	A-5
Q184	H-2	Q176	H-1	Q910	B-5
Q188	G-1	Q177	G-1	Q911	D-3
Q191	I-3	Q178	G-1		
Q206	A-1	Q181	H-1		
Q213	B-2	Q183	H-2		
Q222	B-3	Q186	H-1		
Q223	C-2	Q201	B-1		
Q224	B-3	Q202	B-1		
Q225	B-3	Q203	B-1		
Q226	B-3	Q204	B-1		
Q227	C-3	Q205	A-2		
Q228	C-3	Q207	A-2		
Q334	A-5	Q208	A-2		
Q407	G-4	Q209	A-3		
Q408	G-4	Q210	A-3		
Q409	G-4	Q211	C-1		
Q412	H-4	Q212	B-1		
Q414	G-4	Q214	B-2		
Q503	C-4	Q215	B-2		
Q504	C-4	Q216	B-3		
Q507	C-5	Q217	C-1		
Q508	C-5	Q220	C-2		
Q510	C-5	Q221	B-2		
Q517	F-4	Q229	B-2		
Q518	F-5	Q230	C-3		
Q521	C-5	Q231	C-3		
Q607	E-5	Q233	C-2		
Q614	E-5	Q234	C-3		
Q702	H-5	Q330	A-4		
Q703	H-5	Q331	B-4		
Q704	H-5	Q332	A-5		
Q705	H-5	Q333	B-5		
Q707	I-5	Q335	A-4		
Q708	I-5	Q336	A-5		
Q709	I-5	Q337	A-5		
Q710	I-5	Q338	A-5		
Q711	J-5	Q339	B-4		
Q716	I-5	Q340	B-5		
Q717	I-5	Q341	B-5		
Q718	I-5	Q342	B-4		
Q721	J-5	Q401	F-5		
Q722	G-5	Q402	F-5		
Q724	J-5	Q403	F-5		
Q725	J-5	Q404	E-5		
Q901	D-3	Q405	F-5		
Q906	A-5	Q406	F-5		
Q907	A-5	Q410	H-4		
		Q411	H-4		
		Q413	F-5		

* A-7062-009-A IF-20 BOARD, COMPLETE

****

〈 DIODE 〉

D001	8-719-104-34 DIODE 1S2836	D165	8-719-400-18 DIODE MA152WK
D002	8-719-104-34 DIODE 1S2836	D166	8-719-400-18 DIODE MA152WK
D003	8-719-104-34 DIODE 1S2836	D167	8-719-800-76 DIODE 1SS226
D004	8-719-104-34 DIODE 1S2836	D168	8-719-800-76 DIODE 1SS226
D010	8-719-800-76 DIODE 1SS226	D169	8-719-800-76 DIODE 1SS226
D051	8-719-104-34 DIODE 1S2836	D170	8-719-800-76 DIODE 1SS226
D052	8-719-104-34 DIODE 1S2836	D171	8-719-104-34 DIODE 1S2836
D053	8-719-104-34 DIODE 1S2836	D201	8-719-800-76 DIODE 1SS226
D054	8-719-104-34 DIODE 1S2836	D901	8-719-400-18 DIODE MA152WK
D060	8-719-800-76 DIODE 1SS226	D902	8-719-400-18 DIODE MA152WK
		D903	8-719-104-34 DIODE 1S2836
		D904	8-719-400-18 DIODE MA152WK

〈 IC 〉

IC001	8-759-981-92 IC RC4558M	IC401	8-759-711-71 IC NJM2234M
IC003	8-759-981-92 IC RC4558M	IC402	8-759-711-71 IC NJM2234M
IC004	8-759-981-92 IC RC4558M	IC601	8-759-200-60 IC TA7060AP
IC005	8-759-932-64 IC BU4052BF	IC602	8-759-200-60 IC TA7060AP
IC006	8-759-981-92 IC RC4558M	IC603	8-759-400-06 IC AN608P
IC051	8-759-981-92 IC RC4558M	IC701	8-759-200-60 IC TA7060AP
IC054	8-759-981-92 IC RC4558M	IC702	8-759-402-33 IC AN607P
IC055	8-759-932-64 IC BU4052BF	IC703	8-752-201-30 IC CX22013
IC056	8-759-981-92 IC RC4558M	IC704	8-759-969-13 IC SN16913P
IC165	8-759-200-67 IC TC4001BF	IC705	8-759-101-12 IC uPC311G2
IC201	8-759-030-55 IC MC1496MR	IC801	8-752-009-51 IC CX20095A
IC202	8-759-030-55 IC MC1496MR	IC802	8-752-009-51 IC CX20095A
IC331	8-759-710-62 IC NJM2246M	IC901	8-759-009-10 IC MC14069UBF
IC332	8-759-710-62 IC NJM2246M	IC902	8-759-009-10 IC MC14069UBF
IC333	8-759-710-09 IC NJM2233AM	IC903	8-759-100-93 IC uPC393G2

〈 TRANSISTOR 〉

Q001	8-729-202-38 TRANSISTOR 2SC3326N	Q056	8-729-202-38 TRANSIS
Q002	8-729-202-38 TRANSISTOR 2SC3326N	Q057	8-729-202-38 TRANSIS
Q003	8-729-202-38 TRANSISTOR 2SC3326N	Q060	8-729-101-07 TRANSIS
Q004	8-729-202-38 TRANSISTOR 2SC3326N	Q061	8-729-901-01 TRANSIS
Q005	8-729-202-38 TRANSISTOR 2SC3326N	Q165	8-729-901-06 TRANSIS
Q006	8-729-202-38 TRANSISTOR 2SC3326N	Q166	8-729-901-01 TRANSIS
Q007	8-729-202-38 TRANSISTOR 2SC3326N	Q167	8-729-100-66 TRANSIS
Q008	8-729-202-38 TRANSISTOR 2SC3326N	Q168	8-729-901-06 TRANSIS
Q010	8-729-140-75 TRANSISTOR 2SD999	Q169	8-729-901-06 TRANSIS
Q011	8-729-901-06 TRANSISTOR DTA144EK	Q170	8-729-901-06 TRANSIS
Q051	8-729-202-38 TRANSISTOR 2SC3326N	Q171	8-729-901-06 TRANSIS
Q052	8-729-202-38 TRANSISTOR 2SC3326N	Q172	8-729-100-66 TRANSIS
Q053	8-729-202-38 TRANSISTOR 2SC3326N	Q174	8-729-901-06 TRANSIS
Q054	8-729-202-38 TRANSISTOR 2SC3326N	Q175	8-729-901-06 TRANSIS
Q055	8-729-202-38 TRANSISTOR 2SC3326N	Q176	8-729-901-06 TRANSIS

IF-20 BOARD (COMPONENT SIDE)

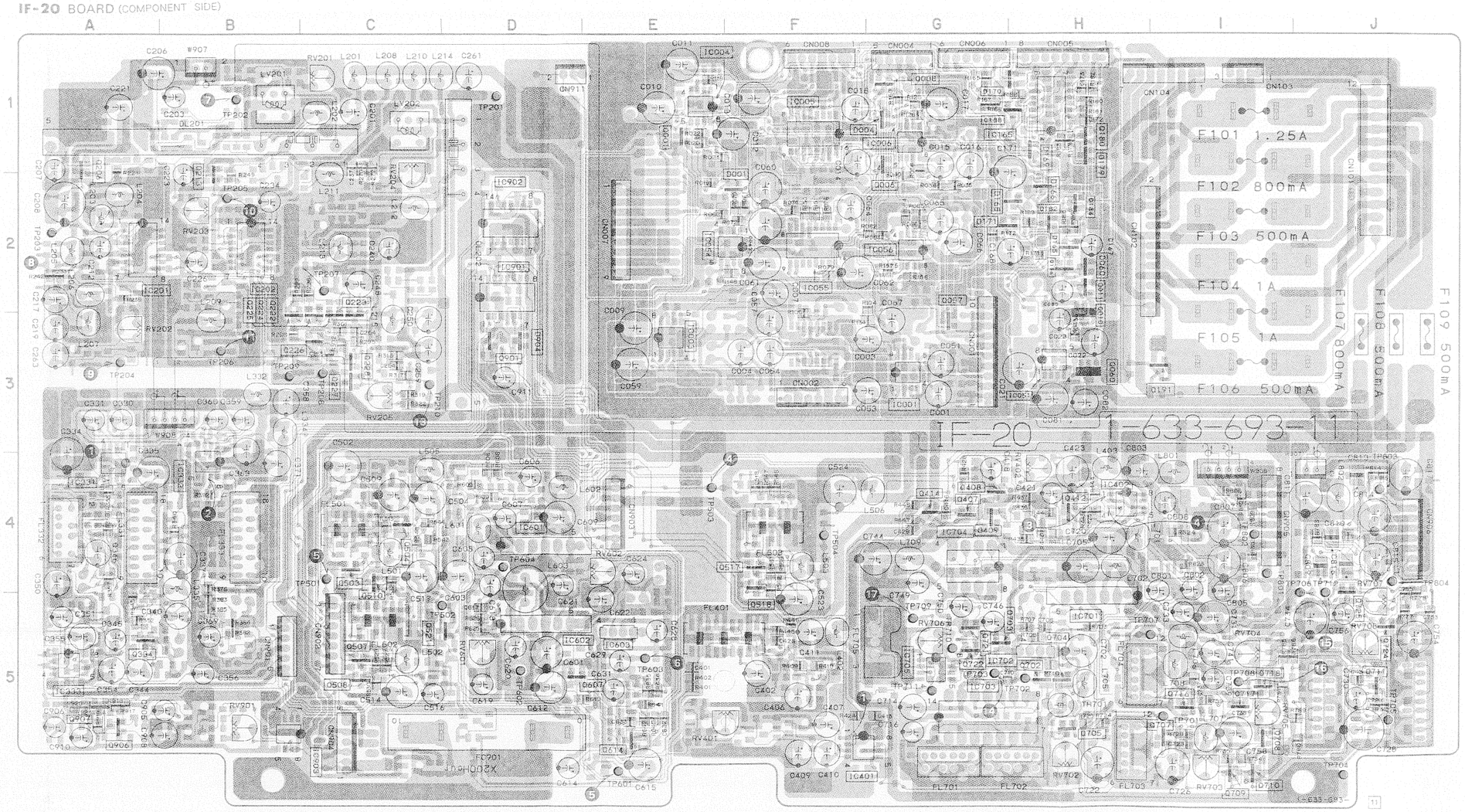

VIDEO JACK EDIT, SYNC SWITCH) PRINTED WIRING BOARDS

〈 TRANSISTOR 〉

02 3	TRANSISTOR	2SC3326N
02 3	TRANSISTOR	2SC3326N
02-38	TRANSISTOR	2SC3326N
02-38	TRANSISTOR	2SC3326N
02 3	TRANSISTOR	2SC3326N
02-38	TRANSISTOR	2SC3326N
02-38	TRANSISTOR	2SC3326N
02 3	TRANSISTOR	2SC3326N
40 5	TRANSISTOR	2SD999
01-06	TRANSISTOR	DTA144EK
02 3	TRANSISTOR	2SC3326N
02 3	TRANSISTOR	2SC3326N
02-38	TRANSISTOR	2SC3326N
02-38	TRANSISTOR	2SC3326N
02 3	TRANSISTOR	2SC3326N

Q056	8-729-202-38	TRANSISTOR 2SC3326N
Q057	8-729-202-38	TRANSISTOR 2SC3326N
Q060	8-729-101-07	TRANSISTOR 2SB798
Q061	8-729-901-01	TRANSISTOR DTC144EK
Q165	8-729-901-06	TRANSISTOR DTA144EK
Q166	8-729-901-01	TRANSISTOR DTC144EK
Q167	8-729-100-66	TRANSISTOR 2SC1623
Q168	8-729-901-06	TRANSISTOR DTA144EK
Q169	8-729-901-06	TRANSISTOR DTA144EK
Q170	8-729-901-06	TRANSISTOR DTA144EK
Q171	8-729-901-06	TRANSISTOR DTA144EK
Q172	8-729-100-66	TRANSISTOR 2SC1623
Q174	8-729-901-06	TRANSISTOR DTA144EK
Q175	8-729-901-06	TRANSISTOR DTA144EK
Q176	8-729-901-06	TRANSISTOR DTA144EK

Q177	8-729-901-06	TRANSISTOR DTA144EK
Q178	8-729-901-01	TRANSISTOR DTC144EK
Q179	8-729-901-06	TRANSISTOR DTA144EK
Q180	8-729-901-01	TRANSISTOR DTC144EK
Q181	8-729-901-01	TRANSISTOR DTC144EK
Q182	8-729-216-22	TRANSISTOR 2SA1162
Q183	8-729-901-01	TRANSISTOR DTC144EK
Q184	8-729-901-01	TRANSISTOR DTC144EK
Q186	8-729-901-06	TRANSISTOR DTA144EK
Q188	8-729-901-06	TRANSISTOR DTA144EK
Q191	8-729-216-22	TRANSISTOR 2SA1162
Q201	8-729-100-66	TRANSISTOR 2SC1623
Q202	8-729-100-66	TRANSISTOR 2SC1623
Q203	8-729-100-66	TRANSISTOR 2SC1623
Q204	8-729-320-17	TRANSISTOR 2SA1122CD
Q205	8-729-100-66	TRANSISTOR 2SC1623
Q206	8-729-100-66	TRANSISTOR 2SC1623
Q207	8-729-100-66	TRANSISTOR 2SC1623
Q208	8-729-320-17	TRANSISTOR 2SA1122CD
Q209	8-729-320-17	TRANSISTOR 2SA1122CD

Q210	8-729-320-17	TRANSISTOR 2SA1122CD
Q211	8-729-320-17	TRANSISTOR 2SA1122CD
Q212	8-729-100-66	TRANSISTOR 2SC1623
Q213	8-729-100-66	TRANSISTOR 2SC1623
Q214	8-729-100-66	TRANSISTOR 2SC1623
Q215	8-729-100-66	TRANSISTOR 2SC1623
Q216	8-729-100-66	TRANSISTOR 2SC1623
Q217	8-729-100-66	TRANSISTOR 2SC1623
Q220	8-729-100-66	TRANSISTOR 2SC1623
Q221	8-729-100-66	TRANSISTOR 2SC1623
Q222	8-729-100-66	TRANSISTOR 2SC1623
Q223	8-729-100-66	TRANSISTOR 2SC1623
Q224	8-729-100-66	TRANSISTOR 2SC1623
Q225	8-729-100-66	TRANSISTOR 2SC1623
Q226	8-729-320-17	TRANSISTOR 2SA1122CD
Q227	8-729-100-66	TRANSISTOR 2SC1623
Q228	8-729-100-66	TRANSISTOR 2SC1623
Q229	8-729-100-66	TRANSISTOR 2SC1623
Q230	8-729-100-66	TRANSISTOR 2SC1623
Q231	8-729-100-66	TRANSISTOR 2SC1623

Q233	8-729-100-66	TRANSISTOR 2SC1623
Q234	8-729-100-66	TRANSISTOR 2SC1623
Q330	8-729-100-66	TRANSISTOR 2SC1623
Q331	8-729-100-66	TRANSISTOR 2SC1623
Q332	8-729-100-66	TRANSISTOR 2SC1623
Q333	8-729-100-66	TRANSISTOR 2SC1623
Q334	8-729-100-66	TRANSISTOR 2SC1623
Q335	8-729-100-66	TRANSISTOR 2SC1623
Q336	8-729-100-66	TRANSISTOR 2SC1623
Q337	8-729-100-66	TRANSISTOR 2SC1623
Q338	8-729-100-66	TRANSISTOR 2SC1623
Q339	8-729-100-66	TRANSISTOR 2SC1623
Q340	8-729-100-66	TRANSISTOR 2SC1623
Q341	8-729-100-66	TRANSISTOR 2SC1623
Q342	8-729-100-66	TRANSISTOR 2SC1623
Q401	8-729-100-66	TRANSISTOR 2SC1623
Q402	8-729-100-66	TRANSISTOR 2SC1623
Q403	8-729-100-66	TRANSISTOR 2SC1623
Q404	8-729-100-66	TRANSISTOR 2SC1623
Q405	8-729-100-66	TRANSISTOR 2SC1623

Q406	8-729-100-66	TRANSISTOR 2SC1623
Q407	8-729-100-66	TRANSISTOR 2SC1623
Q408	8-729-100-66	TRANSISTOR 2SC1623
Q409	8-729-100-66	TRANSISTOR 2SC1623
Q410	8-729-100-66	TRANSISTOR 2SC1623
Q411	8-729-100-66	TRANSISTOR 2SC1623
Q412	8-729-100-66	TRANSISTOR 2SC1623
Q413	8-729-100-66	TRANSISTOR 2SC1623
Q414	8-729-100-66	TRANSISTOR 2SC1623
Q501	8-729-100-66	TRANSISTOR 2SC1623
Q502	8-729-100-66	TRANSISTOR 2SC1623
Q503	8-729-901-06	TRANSISTOR DTA144EK
Q504	8-729-100-66	TRANSISTOR 2SC1623
Q505	8-729-100-66	TRANSISTOR 2SC1623
Q506	8-729-100-66	TRANSISTOR 2SC1623
Q507	8-729-901-06	TRANSISTOR DTA144EK
Q508	8-729-100-66	TRANSISTOR 2SC1623
Q509	8-729-100-66	TRANSISTOR 2SC1623
Q510	8-729-100-66	TRANSISTOR 2SC1623
Q511	8-729-100-66	TRANSISTOR 2SC1623

Q512	8-729-100-66	TRANSISTOR 2SC1623
Q513	8-729-100-66	TRANSISTOR 2SC1623
Q514	8-729-100-66	TRANSISTOR 2SC1623
Q515	8-729-100-66	TRANSISTOR 2SC1623
Q516	8-729-100-66	TRANSISTOR 2SC1623
Q517	8-729-901-06	TRANSISTOR DTA144EK
Q518	8-729-100-66	TRANSISTOR 2SC1623
Q519	8-729-100-66	TRANSISTOR 2SC1623
Q520	8-729-901-06	TRANSISTOR DTA144EK
Q521	8-729-901-06	TRANSISTOR DTA144EK
Q601	8-729-100-66	TRANSISTOR 2SC1623
Q602	8-729-901-01	TRANSISTOR DTC144EK
Q603	8-729-100-66	TRANSISTOR 2SC1623
Q604	8-729-100-66	TRANSISTOR 2SC1623
Q605	8-729-100-66	TRANSISTOR 2SC1623
Q606	8-729-100-66	TRANSISTOR 2SC1623
Q607	8-729-100-66	TRANSISTOR 2SC1623
Q608	8-729-100-66	TRANSISTOR 2SC1623
Q609	8-729-100-66	TRANSISTOR 2SC1623
Q610	8-729-100-66	TRANSISTOR 2SC1623

IF-20 BOARD (CONDUCTOR SIDE)

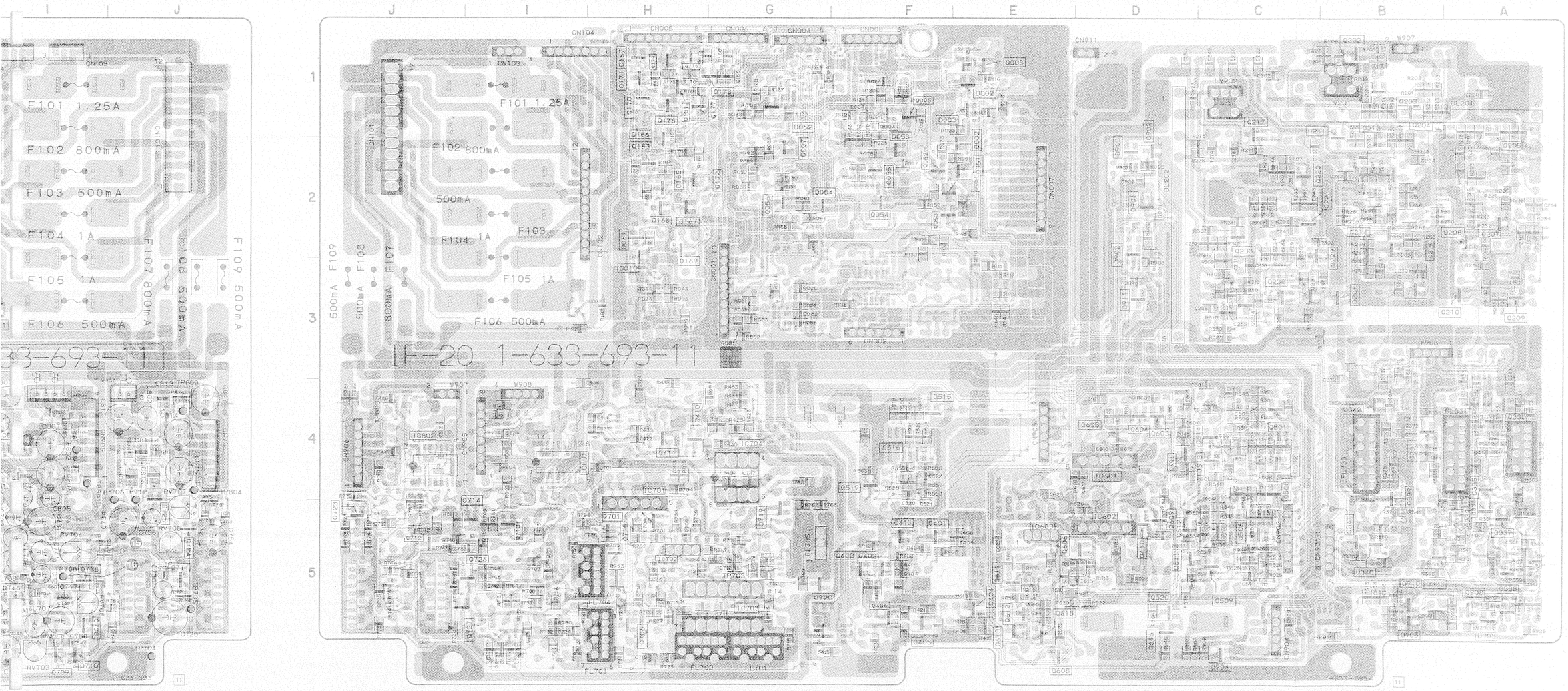

TR-40 BOARD (CONDUCTOR SIDE)

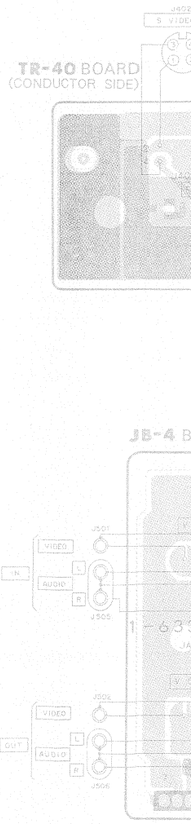

A144EK
C1 EK
A1 EK
C144EK
C144EK
A1 2
C144EK
C144EK
A1 EK
A1 EK
A1162
C1 3
C1 3
C1623
A1122CD
C 3
C1623
C1623
A 2CD
A 2CD

Q210	8-729-320-17 TRANSISTOR 2SA1122CD
Q211	8-729-320-17 TRANSISTOR 2SA1122CD
Q212	8-729-100-66 TRANSISTOR 2SC1623
Q213	8-729-100-66 TRANSISTOR 2SC1623
Q214	8-729-100-66 TRANSISTOR 2SC1623
Q215	8-729-100-66 TRANSISTOR 2SC1623
Q216	8-729-100-66 TRANSISTOR 2SC1623
Q217	8-729-100-66 TRANSISTOR 2SC1623
Q220	8-729-100-66 TRANSISTOR 2SC1623
Q221	8-729-100-66 TRANSISTOR 2SC1623
Q222	8-729-100-66 TRANSISTOR 2SC1623
Q223	8-729-100-66 TRANSISTOR 2SC1623
Q224	8-729-100-66 TRANSISTOR 2SC1623
Q225	8-729-100-66 TRANSISTOR 2SC1623
Q226	8-729-320-17 TRANSISTOR 2SA1122CD
Q227	8-729-100-66 TRANSISTOR 2SC1623
Q228	8-729-100-66 TRANSISTOR 2SC1623
Q229	8-729-100-66 TRANSISTOR 2SC1623
Q230	8-729-100-66 TRANSISTOR 2SC1623
Q231	8-729-100-66 TRANSISTOR 2SC1623

Q233	8-729-100-66 TRANSISTOR 2SC1623
Q234	8-729-100-66 TRANSISTOR 2SC1623
Q330	8-729-100-66 TRANSISTOR 2SC1623
Q331	8-729-100-66 TRANSISTOR 2SC1623
Q332	8-729-100-66 TRANSISTOR 2SC1623
Q333	8-729-100-66 TRANSISTOR 2SC1623
Q334	8-729-100-66 TRANSISTOR 2SC1623
Q335	8-729-100-66 TRANSISTOR 2SC1623
Q336	8-729-100-66 TRANSISTOR 2SC1623
Q337	8-729-100-66 TRANSISTOR 2SC1623
Q338	8-729-100-66 TRANSISTOR 2SC1623
Q339	8-729-100-66 TRANSISTOR 2SC1623
Q340	8-729-100-66 TRANSISTOR 2SC1623
Q341	8-729-100-66 TRANSISTOR 2SC1623
Q342	8-729-100-66 TRANSISTOR 2SC1623
Q401	8-729-100-66 TRANSISTOR 2SC1623
Q402	8-729-100-66 TRANSISTOR 2SC1623
Q403	8-729-100-66 TRANSISTOR 2SC1623
Q404	8-729-100-66 TRANSISTOR 2SC1623
Q405	8-729-100-66 TRANSISTOR 2SC1623

Q406	8-729-100-66 TRANSISTOR 2SC1623
Q407	8-729-100-66 TRANSISTOR 2SC1623
Q408	8-729-100-66 TRANSISTOR 2SC1623
Q409	8-729-100-66 TRANSISTOR 2SC1623
Q410	8-729-100-66 TRANSISTOR 2SC1623
Q411	8-729-100-66 TRANSISTOR 2SC1623
Q412	8-729-100-66 TRANSISTOR 2SC1623
Q413	8-729-100-66 TRANSISTOR 2SC1623
Q414	8-729-100-66 TRANSISTOR 2SC1623
Q501	8-729-100-66 TRANSISTOR 2SC1623
Q502	8-729-100-66 TRANSISTOR 2SC1623
Q503	8-729-901-06 TRANSISTOR DTA144EK
Q504	8-729-100-66 TRANSISTOR 2SC1623
Q505	8-729-100-66 TRANSISTOR 2SC1623
Q506	8-729-100-66 TRANSISTOR 2SC1623
Q507	8-729-901-06 TRANSISTOR DTA144EK
Q508	8-729-100-66 TRANSISTOR 2SC1623
Q509	8-729-100-66 TRANSISTOR 2SC1623
Q510	8-729-100-66 TRANSISTOR 2SC1623
Q511	8-729-100-66 TRANSISTOR 2SC1623

Q512	8-729-100-66 TRANSISTOR 2SC1623
Q513	8-729-100-66 TRANSISTOR 2SC1623
Q514	8-729-100-66 TRANSISTOR 2SC1623
Q515	8-729-100-66 TRANSISTOR 2SC1623
Q516	8-729-100-66 TRANSISTOR 2SC1623
Q517	8-729-901-06 TRANSISTOR DTA144EK
Q518	8-729-100-66 TRANSISTOR 2SC1623
Q519	8-729-100-66 TRANSISTOR 2SC1623
Q520	8-729-901-06 TRANSISTOR DTA144EK
Q521	8-729-901-06 TRANSISTOR DTA144EK
Q601	8-729-100-66 TRANSISTOR 2SC1623
Q602	8-729-901-01 TRANSISTOR DTC144EK
Q603	8-729-100-66 TRANSISTOR 2SC1623
Q604	8-729-100-66 TRANSISTOR 2SC1623
Q605	8-729-100-66 TRANSISTOR 2SC1623
Q606	8-729-100-66 TRANSISTOR 2SC1623
Q607	8-729-100-66 TRANSISTOR 2SC1623
Q608	8-729-100-66 TRANSISTOR 2SC1623
Q609	8-729-100-66 TRANSISTOR 2SC1623
Q610	8-729-100-66 TRANSISTOR 2SC1623

Q611	8-729-100-66 TRANSISTOR 2SC1623
Q612	8-729-901-06 TRANSISTOR DTA144EK
Q613	8-729-901-01 TRANSISTOR DTC144EK
Q614	8-729-901-01 TRANSISTOR DTC144EK
Q615	8-729-901-06 TRANSISTOR DTA144EK
Q616	8-729-901-06 TRANSISTOR DTA144EK
Q701	8-729-100-66 TRANSISTOR 2SC1623
Q702	8-729-100-66 TRANSISTOR 2SC1623
Q703	8-729-202-38 TRANSISTOR 2SC3326N
Q704	8-729-100-66 TRANSISTOR 2SC1623
Q705	8-729-100-66 TRANSISTOR 2SC1623
Q706	8-729-100-66 TRANSISTOR 2SC1623
Q707	8-729-100-66 TRANSISTOR 2SC1623
Q708	8-729-100-66 TRANSISTOR 2SC1623
Q709	8-729-100-66 TRANSISTOR 2SC1623
Q710	8-729-100-66 TRANSISTOR 2SC1623
Q711	8-729-100-66 TRANSISTOR 2SC1623
Q712	8-729-100-66 TRANSISTOR 2SC1623
Q713	8-729-100-66 TRANSISTOR 2SC1623
Q714	8-729-100-66 TRANSISTOR 2SC1623
Q715	8-729-100-66 TRANSISTOR 2SC1623
Q716	8-729-100-66 TRANSISTOR 2SC1623
Q717	8-729-100-66 TRANSISTOR 2SC1623
Q718	8-729-100-66 TRANSISTOR 2SC1623
Q719	8-729-100-66 TRANSISTOR 2SC1623

Q720	8-729-100-66 TRANSISTOR 2SC1623
Q721	8-729-320-17 TRANSISTOR 2SA1122CD
Q722	8-729-100-66 TRANSISTOR 2SC1623
Q723	8-729-100-66 TRANSISTOR 2SC1623
Q724	8-729-100-66 TRANSISTOR 2SC1623
Q725	8-729-100-66 TRANSISTOR 2SC1623
Q726	8-729-100-66 TRANSISTOR 2SC1623
Q727	8-729-216-22 TRANSISTOR 2SA1162
Q901	8-729-901-01 TRANSISTOR DTC144EK
Q902	8-729-901-01 TRANSISTOR DTC144EK
Q903	8-729-901-01 TRANSISTOR DTC144EK
Q904	8-729-901-01 TRANSISTOR DTC144EK
Q905	8-729-901-05 TRANSISTOR DTA124EK
Q906	8-729-100-66 TRANSISTOR 2SC1623
Q907	8-729-100-66 TRANSISTOR 2SC1623
Q908	8-729-100-66 TRANSISTOR 2SC1623
Q909	8-729-100-66 TRANSISTOR 2SC1623
Q910	8-729-100-66 TRANSISTOR 2SC1623
Q911	8-729-901-06 TRANSISTOR DTA144EK

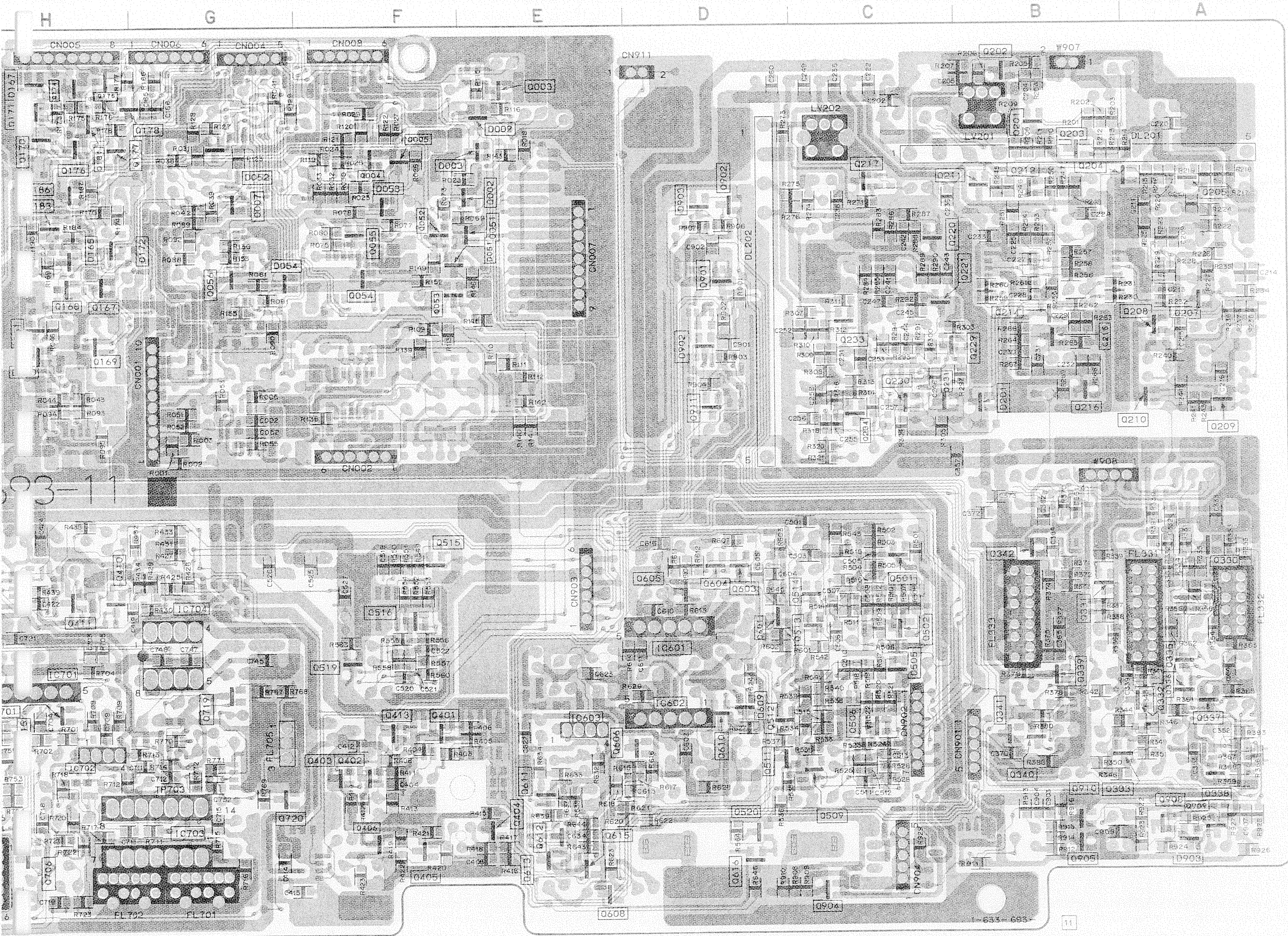

TR-40 BOARD (CONDUCTOR SIDE)

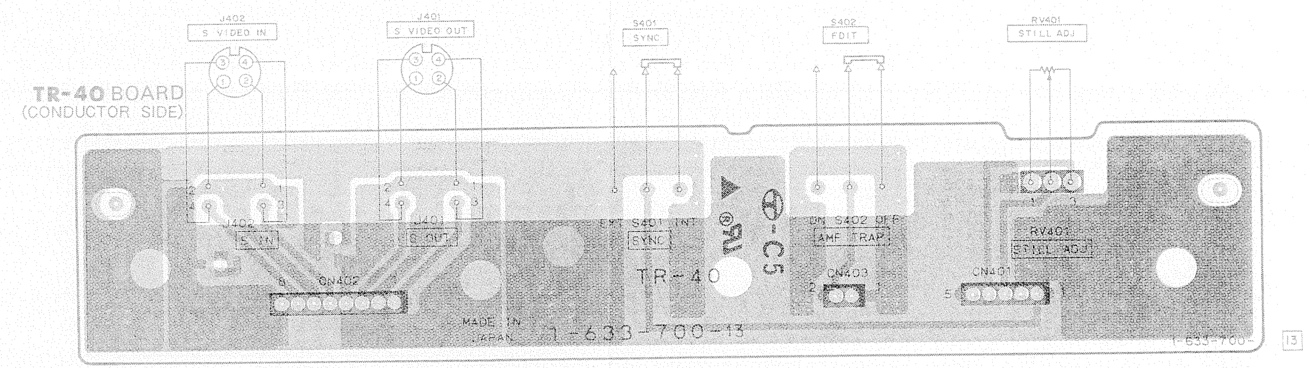

JB-4 BOARD (CONDUCTOR SIDE)

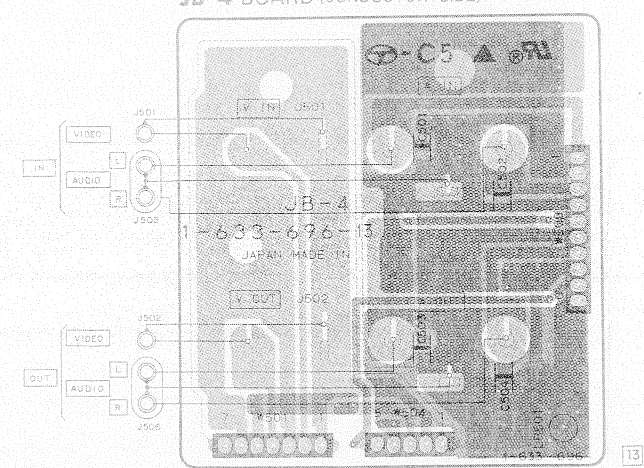

JB-5 BOARD (CONDUCTOR SIDE)

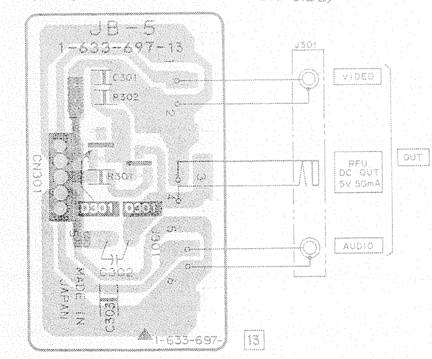

* 1-633-697-11 JB-5 BOARD

****

〈 DIODE 〉

D301 8-719-800-76 DIODE 1SS226

〈 TRANSISTOR 〉

Q301 8-729-216-22 TRANSISTOR 2SA1162

IF-20 (VIDEO SIGNAL SELECT, SHARPNESS, NOISE CANCEL, YX FILTER, Y/C MIX, AUDIO SIGNAL SELECT), JB-4 (VIDEO, AUDIO JACK), JB-5 (VIDEO, AUDIO, RFU DC OUT JACK), TR-40 (S VIDEO JACK EDIT, SYNC SWITCH) PRINTED WIRING BO

— Ref. No. IF-20 BOARD: 8000 series, JB-4, JB-5, TR-40 BOARD: 3000 series —

* A-7062-009-A IF-20 BOARD, COMPLETE
****

⟨ DIODE ⟩

D001	8-719-104-34 DIODE 1S2836	D165	8-719-400-18 DIODE MA152WK
D002	8-719-104-34 DIODE 1S2836	D166	8-719-400-18 DIODE MA152WK
D003	8-719-104-34 DIODE 1S2836	D167	8-719-800-76 DIODE 1SS226
D004	8-719-104-34 DIODE 1S2836	D168	8-719-800-76 DIODE 1SS226
D010	8-719-800-76 DIODE 1SS226	D169	8-719-800-76 DIODE 1SS226
		D170	8-719-800-76 DIODE 1SS226
D051	8-719-104-34 DIODE 1S2836	D171	8-719-104-34 DIODE 1S2836
D052	8-719-104-34 DIODE 1S2836	D201	8-719-800-76 DIODE 1SS226
D053	8-719-104-34 DIODE 1S2836	D901	8-719-400-18 DIODE MA152WK
D054	8-719-104-34 DIODE 1S2836	D902	8-719-400-18 DIODE MA152WK
D060	8-719-800-76 DIODE 1SS226		
		D903	8-719-104-34 DIODE 1S2836
		D904	8-719-400-18 DIODE MA152WK

⟨ IC ⟩

IC001	8-759-981-92 IC RC4558M	IC401	8-759-711-71 IC NJM2234M	IC801	8-752-009-51 IC CX20095A
IC003	8-759-981-92 IC RC4558M	IC402	8-759-711-71 IC NJM2234M	IC802	8-752-009-51 IC CX20095A
IC004	8-759-981-92 IC RC4558M	IC601	8-759-200-60 IC TA7060AP	IC901	8-759-009-10 IC MC14069UBF
IC005	8-759-932-64 IC BU4052BF	IC602	8-759-200-60 IC TA7060AP	IC902	8-759-009-10 IC MC14069UBF
IC006	8-759-981-92 IC RC4558M	IC603	8-759-400-06 IC AN608P	IC903	8-759-100-93 IC uPC393G2
IC051	8-759-981-92 IC RC4558M	IC701	8-759-200-60 IC TA7060AP		
IC054	8-759-981-92 IC RC4558M	IC702	8-759-402-33 IC AN607P		
IC055	8-759-932-64 IC BU4052BF	IC703	8-752-201-30 IC CX22013		
IC056	8-759-981-92 IC RC4558M	IC704	8-759-969-13 IC SN16913P		
IC165	8-759-200-67 IC TC4001BF	IC705	8-759-101-12 IC uPC311G2		
IC201	8-759-030-55 IC MC1496MR				
IC202	8-759-030-55 IC MC1496MR				
IC331	8-759-710-62 IC NJM2246M				
IC332	8-759-710-62 IC NJM2246M				
IC333	8-759-710-09 IC NJM2233AM				

⟨ TRANSISTOR ⟩

Q001	8-729-202-38 TRANSISTOR 2SC3326N	Q056	8-729-202-38 TRANSISTOR	Q166	8-729-901-01 TRANSISTOR
Q002	8-729-202-38 TRANSISTOR 2SC3326N	Q057	8-729-202-38 TRANSISTOR	Q167	8-729-100-66 TRANSISTOR
Q003	8-729-202-38 TRANSISTOR 2SC3326N	Q060	8-729-101-07 TRANSISTOR	Q168	8-729-901-06 TRANSISTOR
Q004	8-729-202-38 TRANSISTOR 2SC3326N	Q061	8-729-901-01 TRANSISTOR	Q169	8-729-901-06 TRANSISTOR
Q005	8-729-202-38 TRANSISTOR 2SC3326N	Q165	8-729-901-06 TRANSISTOR	Q170	8-729-901-06 TRANSISTOR
Q006	8-729-202-38 TRANSISTOR 2SC3326N			Q171	8-729-901-06 TRANSISTOR
Q007	8-729-202-38 TRANSISTOR 2SC3326N			Q172	8-729-100-66 TRANSISTOR
Q008	8-729-202-38 TRANSISTOR 2SC3326N			Q174	8-729-901-06 TRANSISTOR
Q010	8-729-140-75 TRANSISTOR 2SD999			Q175	8-729-901-06 TRANSISTOR
Q011	8-729-901-06 TRANSISTOR DTA144EK			Q176	8-729-901-06 TRANSISTOR
Q051	8-729-202-38 TRANSISTOR 2SC3326N				
Q052	8-729-202-38 TRANSISTOR 2SC3326N				
Q053	8-729-202-38 TRANSISTOR 2SC3326N				
Q054	8-729-202-38 TRANSISTOR 2SC3326N				
Q055	8-729-202-38 TRANSISTOR 2SC3326N				

IF-20 BOARD (COMPONENT SIDE)		IF-20 BOARD (CONDUCTOR SIDE)			
D001	F-2	D002	E-1	Q501	C-4
D004	F-1	D003	F-1	Q502	C-4
D060	H-2	D010	H-3	Q505	C-4
D165	H-2	D051	E-2	Q506	C-5
D166	H-1	D052	G-1	Q509	C-5
D168	G-2	D053	F-1	Q511	D-5
D169	H-1	D054	G-2	Q512	D-5
D170	G-1	D167	H-1	Q513	C-4
D171	G-2	D201	B-3	Q514	D-4
D904	D-3	D901	D-2	Q515	F-4
		D902	D-2	Q516	F-4
IC001	G-3	D903	A-5	Q519	F-4
IC003	E-3			Q520	D-5
IC004	E-1	IC601	D-4	Q601	D-4
IC005	F-1	IC602	D-5	Q602	D-4
IC006	G-1	IC603	E-5	Q603	D-4
IC051	H-3	IC701	H-4	Q604	D-4
IC054	F-2	IC702	H-5	Q605	D-4
IC055	F-2	IC703	G-5	Q606	E-5
IC056	G-2	IC704	G-4	Q608	E-5
IC165	G-1	IC801	I-4	Q609	D-5
IC201	A-2	IC802	J-4	Q610	D-5
IC202	B-2			Q611	E-5
IC331	A-4	Q002	E-2	Q612	E-5
IC332	B-4	Q003	E-1	Q613	E-5
IC333	A-5	Q004	F-1	Q615	E-5
IC401	F-5	Q005	F-1	Q616	D-5
IC402	H-4	Q007	G-2	Q701	H-5
IC705	G-5	Q051	E-2	Q706	H-5
IC901	D-2	Q052	F-2	Q712	J-5
IC902	D-2	Q053	F-2	Q713	I-5
IC903	C-5	Q054	F-2	Q714	I-5
		Q055	F-2	Q715	H-5
Q001	E-1	Q056	G-2	Q719	G-5
Q006	G-2	Q061	H-2	Q720	G-5
Q008	G-1	Q165	H-2	Q723	J-5
Q010	H-3	Q167	H-2	Q726	I-5
Q011	H-2	Q168	H-2	Q727	I-5
Q057	G-2	Q169	H-3	Q902	D-1
Q060	H-3	Q170	H-1	Q903	D-2
Q166	H-2	Q171	H-1	Q904	C-5
Q179	H-1	Q172	G-2	Q905	B-5
Q180	H-1	Q174	H-1	Q908	A-5
Q182	H-2	Q175	H-1	Q909	A-5
Q184	H-2	Q176	H-1	Q910	B-5
Q188	G-1	Q177	G-1	Q911	D-3
Q191	I-3	Q178	G-1		
Q206	A-1	Q181	H-1		
Q213	B-2	Q183	H-2		
Q222	B-3	Q186	H-1		
Q223	C-2	Q201	B-1		
Q224	B-3	Q202	B-1		
Q225	B-3	Q203	B-1		
Q226	B-3	Q204	B-1		
Q227	C-3	Q205	A-2		
Q228	C-3	Q207	A-2		
Q334	A-5	Q208	A-2		
Q407	G-4	Q209	A-3		
Q408	G-4	Q210	A-3		
Q409	G-4	Q211	C-1		
Q412	H-4	Q212	B-1		
Q414	G-4	Q214	B-2		
Q503	C-4	Q215	B-2		
Q504	C-4	Q216	B-3		
Q507	C-5	Q217	C-1		
Q508	C-5	Q220	C-2		
Q510	C-5	Q221	B-2		
Q517	F-4	Q229	B-2		
Q518	F-5	Q230	C-3		
Q521	C-5	Q231	C-3		
Q607	E-5	Q233	C-2		
Q614	E-5	Q234	C-3		
Q702	H-5	Q330	A-4		
Q703	H-5	Q331	B-4		
Q704	H-5	Q332	A-5		
Q705	H-5	Q333	B-5		
Q707	I-5	Q335	A-4		
Q708	I-5	Q336	A-5		
Q709	I-5	Q337	A-5		
Q710	I-5	Q338	A-5		
Q711	J-5	Q339	B-4		
Q716	I-5	Q340	B-5		
Q717	I-5	Q341	B-5		
Q718	I-5	Q342	B-4		
Q721	J-5	Q401	F-5		
Q722	G-5	Q402	F-5		
Q724	J-5	Q403	F-5		
Q725	J-5	Q404	E-5		
Q901	D-3	Q405	F-5		
Q906	A-5	Q406	F-5		
Q907	A-5	Q410	H-4		
		Q411	H-4		
		Q413	F-5		

IF-20 BOARD (COMPONENT SIDE)

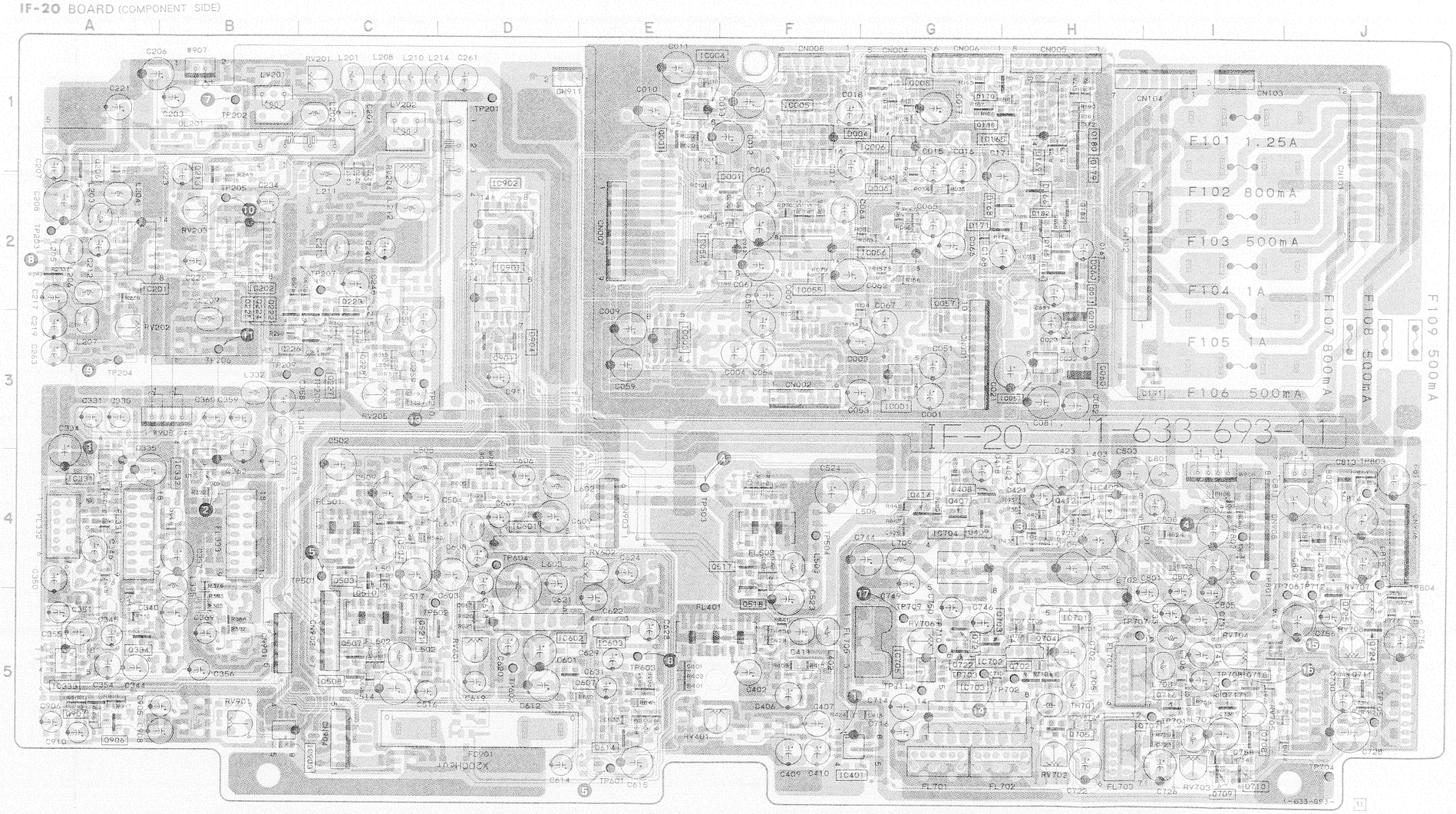

VIDEO JACK EDIT, SYNC SWITCH) PRINTED WIRING BOARDS

(TRANSISTOR)

20 38	TRANSISTOR 2SC3326N
20 38	TRANSISTOR 2SC3326N
202-38	TRANSISTOR 2SC3326N
202-38	TRANSISTOR 2SC3326N
20 38	TRANSISTOR 2SC3326N
202-38	TRANSISTOR 2SC3326N
202-38	TRANSISTOR 2SC3326N
20 38	TRANSISTOR 2SC3326N
14 75	TRANSISTOR 2SD999
901-06	TRANSISTOR DTA144EK
20 38	TRANSISTOR 2SC3326N
20 38	TRANSISTOR 2SC3326N
202-38	TRANSISTOR 2SC3326N
202-38	TRANSISTOR 2SC3326N
20 38	TRANSISTOR 2SC3326N

Q056	8-729-202-38 TRANSISTOR 2SC3326N
Q057	8-729-202-38 TRANSISTOR 2SC3326N
Q060	8-729-101-07 TRANSISTOR 2SB798
Q061	8-729-901-01 TRANSISTOR DTC144EK
Q165	8-729-901-06 TRANSISTOR DTA144EK
Q166	8-729-901-01 TRANSISTOR DTC144EK
Q167	8-729-100-66 TRANSISTOR 2SC1623
Q168	8-729-901-06 TRANSISTOR DTA144EK
Q169	8-729-901-06 TRANSISTOR DTA144EK
Q170	8-729-901-06 TRANSISTOR DTA144EK
Q171	8-729-901-06 TRANSISTOR DTA144EK
Q172	8-729-100-66 TRANSISTOR 2SC1623
Q174	8-729-901-06 TRANSISTOR DTA144EK
Q175	8-729-901-06 TRANSISTOR DTA144EK
Q176	8-729-901-06 TRANSISTOR DTA144EK

Q177	8-729-901-06 TRANSISTOR DTA144EK
Q178	8-729-901-01 TRANSISTOR DTC144EK
Q179	8-729-901-06 TRANSISTOR DTA144EK
Q180	8-729-901-01 TRANSISTOR DTC144EK
Q181	8-729-901-01 TRANSISTOR DTC144EK
Q182	8-729-216-22 TRANSISTOR 2SA1162
Q183	8-729-901-01 TRANSISTOR DTC144EK
Q184	8-729-901-01 TRANSISTOR DTC144EK
Q186	8-729-901-06 TRANSISTOR DTA144EK
Q188	8-729-901-06 TRANSISTOR DTA144EK
Q191	8-729-216-22 TRANSISTOR 2SA1162
Q201	8-729-100-66 TRANSISTOR 2SC1623
Q202	8-729-100-66 TRANSISTOR 2SC1623
Q203	8-729-100-66 TRANSISTOR 2SC1623
Q204	8-729-320-17 TRANSISTOR 2SA1122CD
Q205	8-729-100-66 TRANSISTOR 2SC1623
Q206	8-729-100-66 TRANSISTOR 2SC1623
Q207	8-729-100-66 TRANSISTOR 2SC1623
Q208	8-729-320-17 TRANSISTOR 2SA1122CD
Q209	8-729-320-17 TRANSISTOR 2SA1122CD

Q210	8-729-320-17 TRANSISTOR 2SA1122CD
Q211	8-729-320-17 TRANSISTOR 2SA1122CD
Q212	8-729-100-66 TRANSISTOR 2SC1623
Q213	8-729-100-66 TRANSISTOR 2SC1623
Q214	8-729-100-66 TRANSISTOR 2SC1623
Q215	8-729-100-66 TRANSISTOR 2SC1623
Q216	8-729-100-66 TRANSISTOR 2SC1623
Q217	8-729-100-66 TRANSISTOR 2SC1623
Q220	8-729-100-66 TRANSISTOR 2SC1623
Q221	8-729-100-66 TRANSISTOR 2SC1623
Q222	8-729-100-66 TRANSISTOR 2SC1623
Q223	8-729-100-66 TRANSISTOR 2SC1623
Q224	8-729-100-66 TRANSISTOR 2SC1623
Q225	8-729-100-66 TRANSISTOR 2SC1623
Q226	8-729-320-17 TRANSISTOR 2SA1122CD
Q227	8-729-100-66 TRANSISTOR 2SC1623
Q228	8-729-100-66 TRANSISTOR 2SC1623
Q229	8-729-100-66 TRANSISTOR 2SC1623
Q230	8-729-100-66 TRANSISTOR 2SC1623
Q231	8-729-100-66 TRANSISTOR 2SC1623

Q233	8-729-100-66 TRANSISTOR 2SC1623
Q234	8-729-100-66 TRANSISTOR 2SC1623
Q330	8-729-100-66 TRANSISTOR 2SC1623
Q331	8-729-100-66 TRANSISTOR 2SC1623
Q332	8-729-100-66 TRANSISTOR 2SC1623
Q333	8-729-100-66 TRANSISTOR 2SC1623
Q334	8-729-100-66 TRANSISTOR 2SC1623
Q335	8-729-100-66 TRANSISTOR 2SC1623
Q336	8-729-100-66 TRANSISTOR 2SC1623
Q337	8-729-100-66 TRANSISTOR 2SC1623
Q338	8-729-100-66 TRANSISTOR 2SC1623
Q339	8-729-100-66 TRANSISTOR 2SC1623
Q340	8-729-100-66 TRANSISTOR 2SC1623
Q341	8-729-100-66 TRANSISTOR 2SC1623
Q342	8-729-100-66 TRANSISTOR 2SC1623
Q401	8-729-100-66 TRANSISTOR 2SC1623
Q402	8-729-100-66 TRANSISTOR 2SC1623
Q403	8-729-100-66 TRANSISTOR 2SC1623
Q404	8-729-100-66 TRANSISTOR 2SC1623
Q405	8-729-100-66 TRANSISTOR 2SC1623

Q406	8-729-100-66 TRANSISTOR 2SC1623
Q407	8-729-100-66 TRANSISTOR 2SC1623
Q408	8-729-100-66 TRANSISTOR 2SC1623
Q409	8-729-100-66 TRANSISTOR 2SC1623
Q410	8-729-100-66 TRANSISTOR 2SC1623
Q411	8-729-100-66 TRANSISTOR 2SC1623
Q412	8-729-100-66 TRANSISTOR 2SC1623
Q413	8-729-100-66 TRANSISTOR 2SC1623
Q414	8-729-100-66 TRANSISTOR 2SC1623
Q501	8-729-100-66 TRANSISTOR 2SC1623
Q502	8-729-100-66 TRANSISTOR 2SC1623
Q503	8-729-901-06 TRANSISTOR DTA144EK
Q504	8-729-100-66 TRANSISTOR 2SC1623
Q505	8-729-100-66 TRANSISTOR 2SC1623
Q506	8-729-100-66 TRANSISTOR 2SC1623
Q507	8-729-901-06 TRANSISTOR DTA144EK
Q508	8-729-100-66 TRANSISTOR 2SC1623
Q509	8-729-100-66 TRANSISTOR 2SC1623
Q510	8-729-100-66 TRANSISTOR 2SC1623
Q511	8-729-100-66 TRANSISTOR 2SC1623

Q512	8-729-100-66 TRANSISTOR 2SC1623
Q513	8-729-100-66 TRANSISTOR 2SC1623
Q514	8-729-100-66 TRANSISTOR 2SC1623
Q515	8-729-100-66 TRANSISTOR 2SC1623
Q516	8-729-100-66 TRANSISTOR 2SC1623
Q517	8-729-901-06 TRANSISTOR DTA144EK
Q518	8-729-100-66 TRANSISTOR 2SC1623
Q519	8-729-100-66 TRANSISTOR 2SC1623
Q520	8-729-901-06 TRANSISTOR DTA144EK
Q521	8-729-901-06 TRANSISTOR DTA144EK
Q601	8-729-100-66 TRANSISTOR 2SC1623
Q602	8-729-901-01 TRANSISTOR DTC144EK
Q603	8-729-100-66 TRANSISTOR 2SC1623
Q604	8-729-100-66 TRANSISTOR 2SC1623
Q605	8-729-100-66 TRANSISTOR 2SC1623
Q606	8-729-100-66 TRANSISTOR 2SC1623
Q607	8-729-100-66 TRANSISTOR 2SC1623
Q608	8-729-100-66 TRANSISTOR 2SC1623
Q609	8-729-100-66 TRANSISTOR 2SC1623
Q610	8-729-100-66 TRANSISTOR 2SC1623

IF-20 BOARD (CONDUCTOR SIDE)

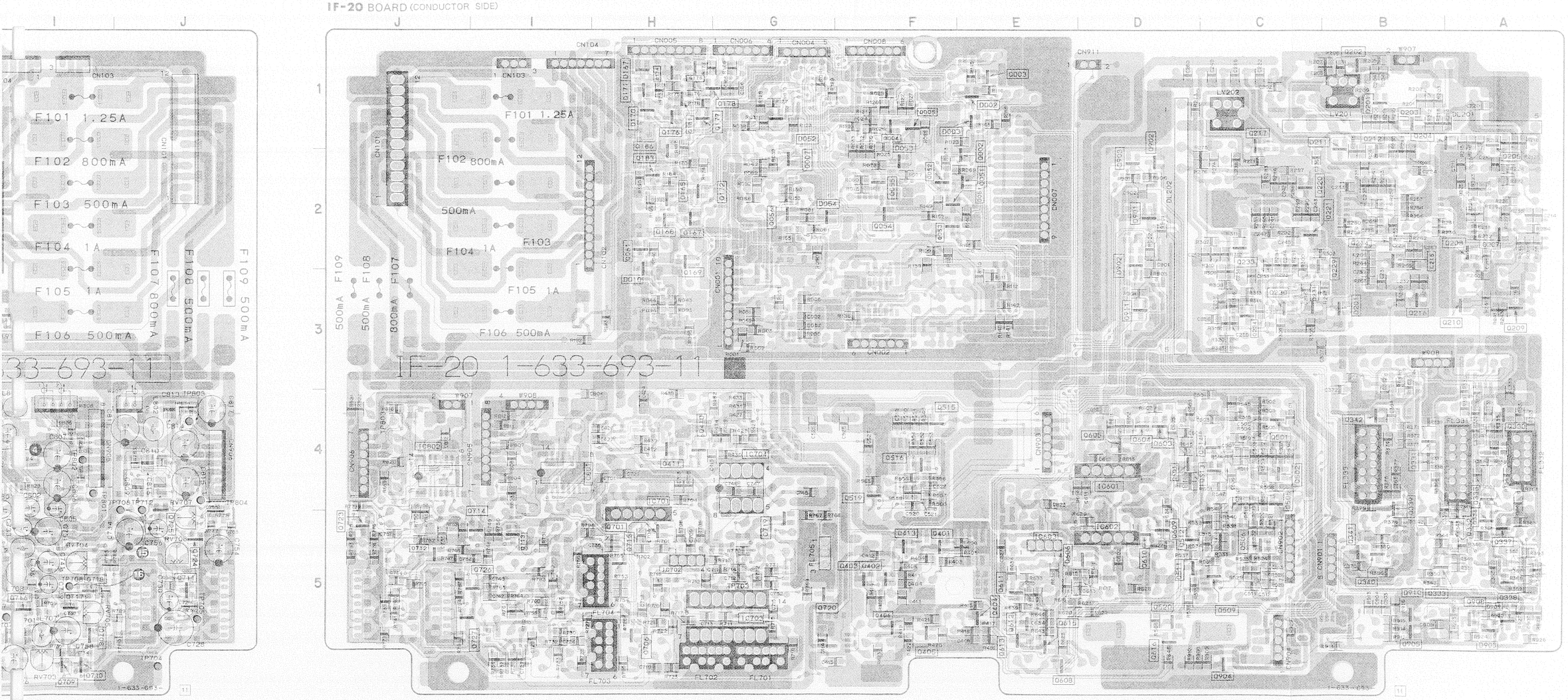

Q210	8-729-320-17 TRANSISTOR 2SA1122CD	Q233	8-729-100-66 TRANSISTOR 2SC1623	Q406	8-729-100-66 TRANSISTOR 2SC1623	Q512	8-729-100-66 TRANSISTOR 2SC1623	Q611	8-729-100-66 TRANSISTOR 2SC1623	Q720	8-729-100-66 TRANSISTOR 2SC1623
Q211	8-729-320-17 TRANSISTOR 2SA1122CD	Q234	8-729-100-66 TRANSISTOR 2SC1623	Q407	8-729-100-66 TRANSISTOR 2SC1623	Q513	8-729-100-66 TRANSISTOR 2SC1623	Q612	8-729-901-06 TRANSISTOR DTA144EK	Q721	8-729-320-17 TRANSISTOR 2SA1122CD
Q212	8-729-100-66 TRANSISTOR 2SC1623	Q330	8-729-100-66 TRANSISTOR 2SC1623	Q408	8-729-100-66 TRANSISTOR 2SC1623	Q514	8-729-100-66 TRANSISTOR 2SC1623	Q613	8-729-901-01 TRANSISTOR DTC144EK	Q722	8-729-100-66 TRANSISTOR 2SC1623
Q213	8-729-100-66 TRANSISTOR 2SC1623	Q331	8-729-100-66 TRANSISTOR 2SC1623	Q409	8-729-100-66 TRANSISTOR 2SC1623	Q515	8-729-100-66 TRANSISTOR 2SC1623	Q614	8-729-901-01 TRANSISTOR DTC144EK	Q723	8-729-100-66 TRANSISTOR 2SC1623
Q214	8-729-100-66 TRANSISTOR 2SC1623	Q332	8-729-100-66 TRANSISTOR 2SC1623	Q410	8-729-100-66 TRANSISTOR 2SC1623	Q516	8-729-100-66 TRANSISTOR 2SC1623	Q615	8-729-901-06 TRANSISTOR DTA144EK	Q724	8-729-100-66 TRANSISTOR 2SC1623
Q215	8-729-100-66 TRANSISTOR 2SC1623	Q333	8-729-100-66 TRANSISTOR 2SC1623	Q411	8-729-100-66 TRANSISTOR 2SC1623	Q517	8-729-901-06 TRANSISTOR DTA144EK	Q616	8-729-901-06 TRANSISTOR DTA144EK	Q725	8-729-100-66 TRANSISTOR 2SC1623
Q216	8-729-100-66 TRANSISTOR 2SC1623	Q334	8-729-100-66 TRANSISTOR 2SC1623	Q412	8-729-100-66 TRANSISTOR 2SC1623	Q518	8-729-100-66 TRANSISTOR 2SC1623	Q701	8-729-100-66 TRANSISTOR 2SC1623	Q726	8-729-100-66 TRANSISTOR 2SC1623
Q217	8-729-100-66 TRANSISTOR 2SC1623	Q335	8-729-100-66 TRANSISTOR 2SC1623	Q413	8-729-100-66 TRANSISTOR 2SC1623	Q519	8-729-100-66 TRANSISTOR 2SC1623	Q702	8-729-100-66 TRANSISTOR 2SC1623	Q727	8-729-216-22 TRANSISTOR 2SA1162
Q220	8-729-100-66 TRANSISTOR 2SC1623	Q336	8-729-100-66 TRANSISTOR 2SC1623	Q414	8-729-100-66 TRANSISTOR 2SC1623	Q520	8-729-901-06 TRANSISTOR DTA144EK	Q703	8-729-202-38 TRANSISTOR 2SC3326N	Q901	8-729-901-01 TRANSISTOR DTC144EK
Q221	8-729-100-66 TRANSISTOR 2SC1623	Q337	8-729-100-66 TRANSISTOR 2SC1623	Q501	8-729-100-66 TRANSISTOR 2SC1623	Q521	8-729-901-06 TRANSISTOR DTA144EK	Q704	8-729-100-66 TRANSISTOR 2SC1623	Q902	8-729-901-01 TRANSISTOR DTC144EK
Q222	8-729-100-66 TRANSISTOR 2SC1623	Q338	8-729-100-66 TRANSISTOR 2SC1623	Q502	8-729-100-66 TRANSISTOR 2SC1623	Q601	8-729-100-66 TRANSISTOR 2SC1623	Q705	8-729-100-66 TRANSISTOR 2SC1623	Q903	8-729-901-01 TRANSISTOR DTC144EK
Q223	8-729-100-66 TRANSISTOR 2SC1623	Q339	8-729-100-66 TRANSISTOR 2SC1623	Q503	8-729-901-06 TRANSISTOR DTA144EK	Q602	8-729-901-01 TRANSISTOR DTC144EK	Q706	8-729-100-66 TRANSISTOR 2SC1623	Q904	8-729-901-01 TRANSISTOR DTC144EK
Q224	8-729-100-66 TRANSISTOR 2SC1623	Q340	8-729-100-66 TRANSISTOR 2SC1623	Q504	8-729-100-66 TRANSISTOR 2SC1623	Q603	8-729-100-66 TRANSISTOR 2SC1623	Q707	8-729-100-66 TRANSISTOR 2SC1623	Q905	8-729-901-05 TRANSISTOR DTA124EK
Q225	8-729-100-66 TRANSISTOR 2SC1623	Q341	8-729-100-66 TRANSISTOR 2SC1623	Q505	8-729-100-66 TRANSISTOR 2SC1623	Q604	8-729-100-66 TRANSISTOR 2SC1623	Q708	8-729-100-66 TRANSISTOR 2SC1623	Q906	8-729-100-66 TRANSISTOR 2SC1623
Q226	8-729-320-17 TRANSISTOR 2SA1122CD	Q342	8-729-100-66 TRANSISTOR 2SC1623	Q506	8-729-100-66 TRANSISTOR 2SC1623	Q605	8-729-100-66 TRANSISTOR 2SC1623	Q709	8-729-100-66 TRANSISTOR 2SC1623	Q907	8-729-100-66 TRANSISTOR 2SC1623
Q227	8-729-100-66 TRANSISTOR 2SC1623	Q401	8-729-100-66 TRANSISTOR 2SC1623	Q507	8-729-901-06 TRANSISTOR DTA144EK	Q606	8-729-100-66 TRANSISTOR 2SC1623	Q710	8-729-100-66 TRANSISTOR 2SC1623	Q908	8-729-100-66 TRANSISTOR 2SC1623
Q228	8-729-100-66 TRANSISTOR 2SC1623	Q402	8-729-100-66 TRANSISTOR 2SC1623	Q508	8-729-100-66 TRANSISTOR 2SC1623	Q607	8-729-100-66 TRANSISTOR 2SC1623	Q711	8-729-100-66 TRANSISTOR 2SC1623	Q909	8-729-100-66 TRANSISTOR 2SC1623
Q229	8-729-100-66 TRANSISTOR 2SC1623	Q403	8-729-100-66 TRANSISTOR 2SC1623	Q509	8-729-100-66 TRANSISTOR 2SC1623	Q608	8-729-100-66 TRANSISTOR 2SC1623	Q712	8-729-100-66 TRANSISTOR 2SC1623	Q910	8-729-100-66 TRANSISTOR 2SC1623
Q230	8-729-100-66 TRANSISTOR 2SC1623	Q404	8-729-100-66 TRANSISTOR 2SC1623	Q510	8-729-100-66 TRANSISTOR 2SC1623	Q609	8-729-100-66 TRANSISTOR 2SC1623	Q713	8-729-100-66 TRANSISTOR 2SC1623	Q911	8-729-901-06 TRANSISTOR DTA144EK
Q231	8-729-100-66 TRANSISTOR 2SC1623	Q405	8-729-100-66 TRANSISTOR 2SC1623	Q511	8-729-100-66 TRANSISTOR 2SC1623	Q610	8-729-100-66 TRANSISTOR 2SC1623	Q714	8-729-100-66 TRANSISTOR 2SC1623		
								Q715	8-729-100-66 TRANSISTOR 2SC1623		
								Q716	8-729-100-66 TRANSISTOR 2SC1623		
								Q717	8-729-100-66 TRANSISTOR 2SC1623		
								Q718	8-729-100-66 TRANSISTOR 2SC1623		
								Q719	8-729-100-66 TRANSISTOR 2SC1623		

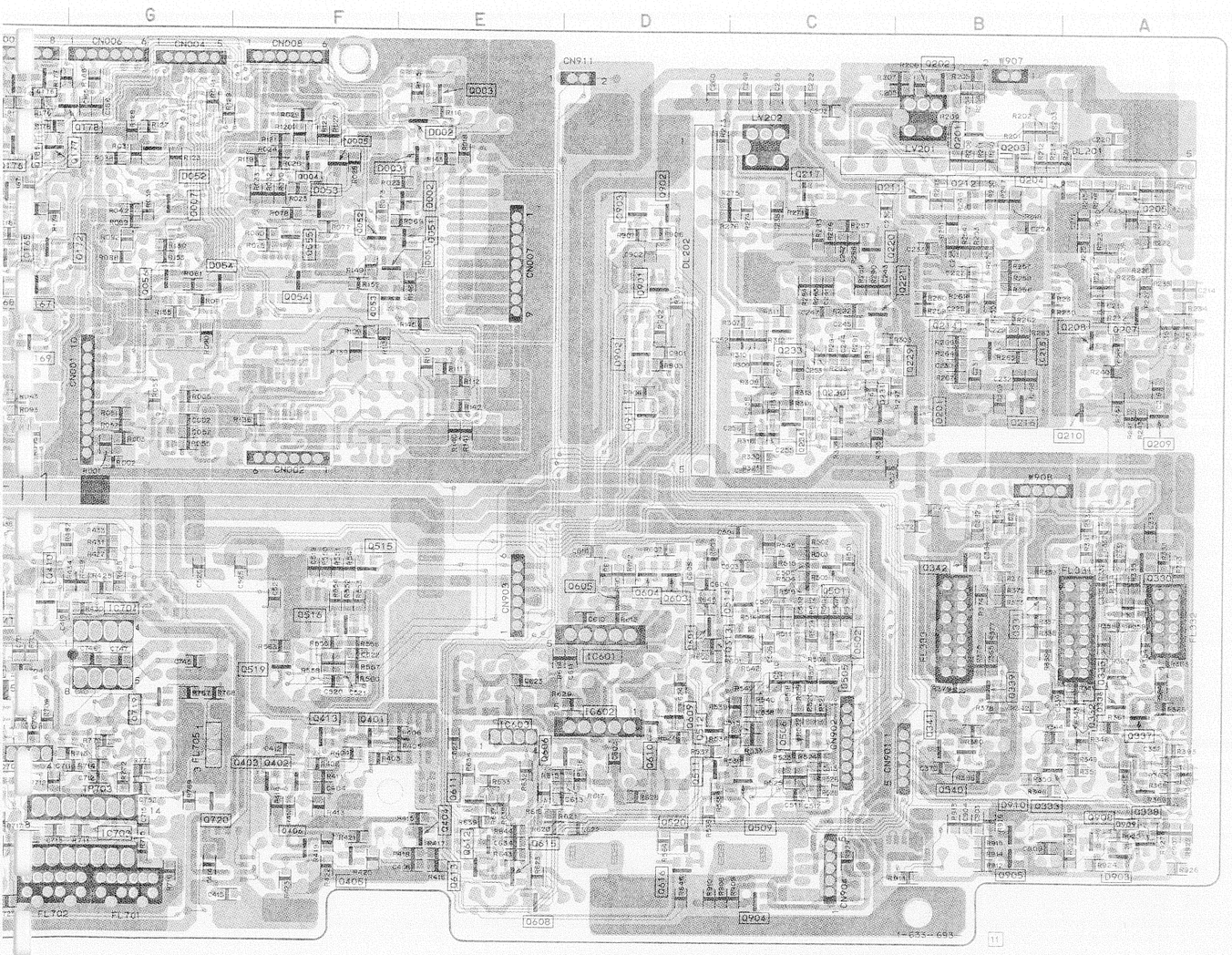

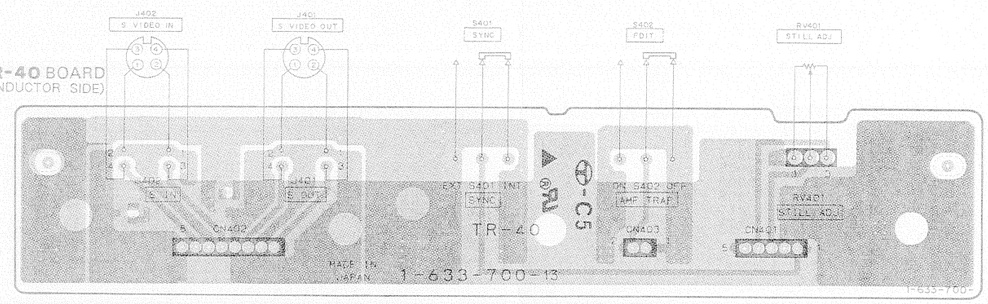

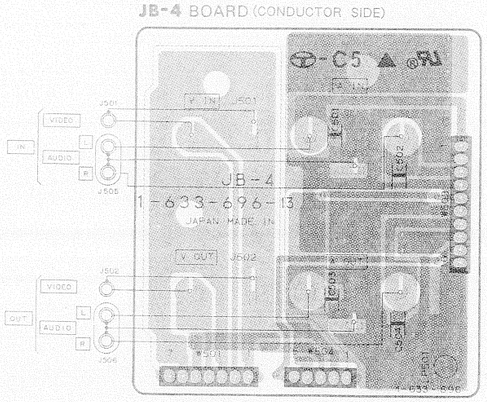

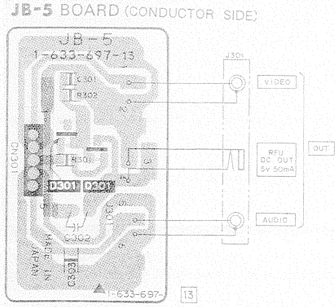

* 1-633-697-11 JB-5 BOARD

****

〈 DIODE 〉

D301 8-719-800-76 DIODE 1SS226

〈 TRANSISTOR 〉

Q301 8-729-216-22 TRANSISTOR 2SA1162

— Ref. No. IF-20 BOARD: 8000 series —

IF-20 BOARD (2/4)

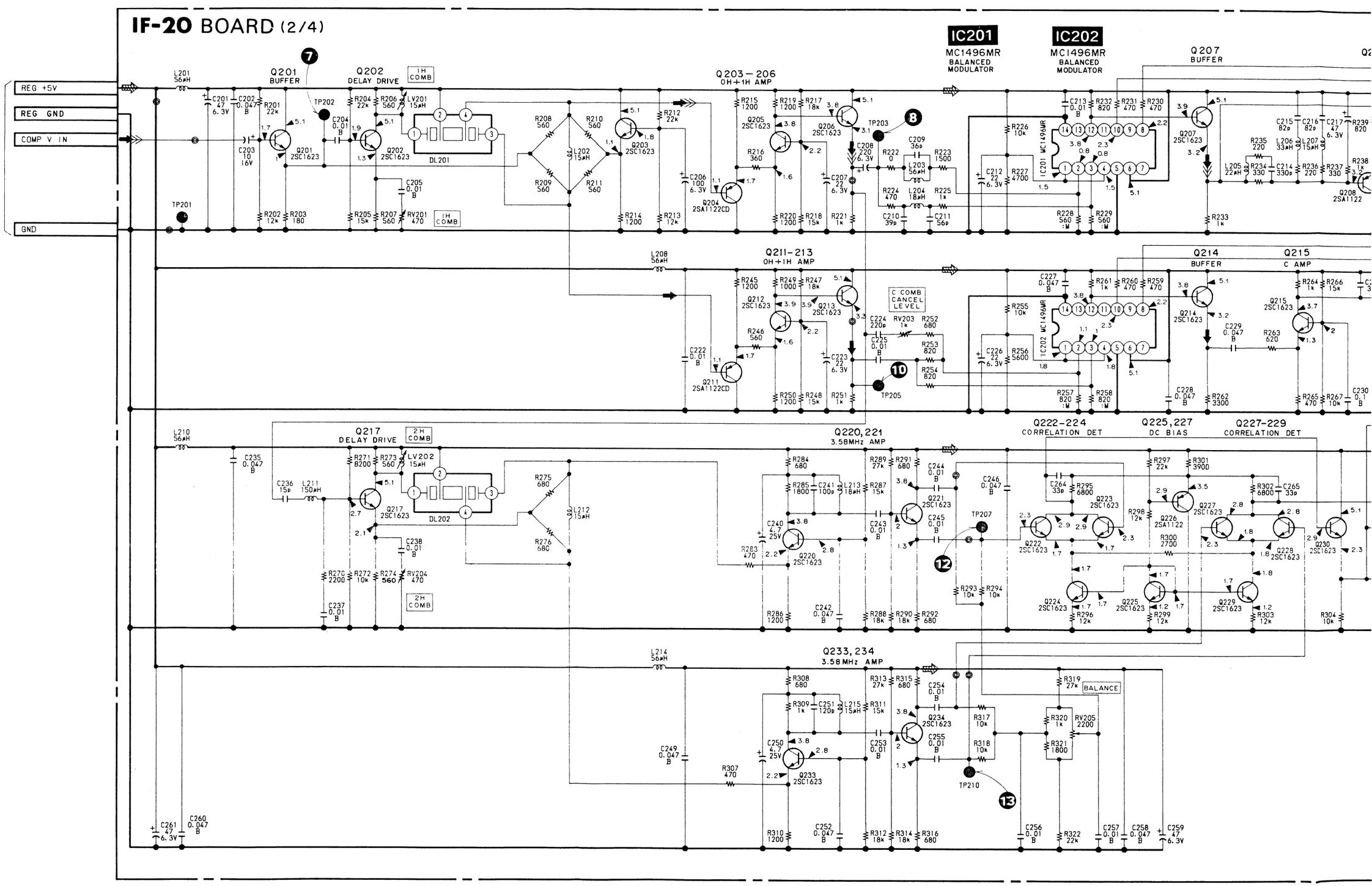

15 | 16 | 17 | 18 | 19 | 20 | 21 | 22 | 23 | 24 | 25 | 26 | 27 | 28 | 29 | 30

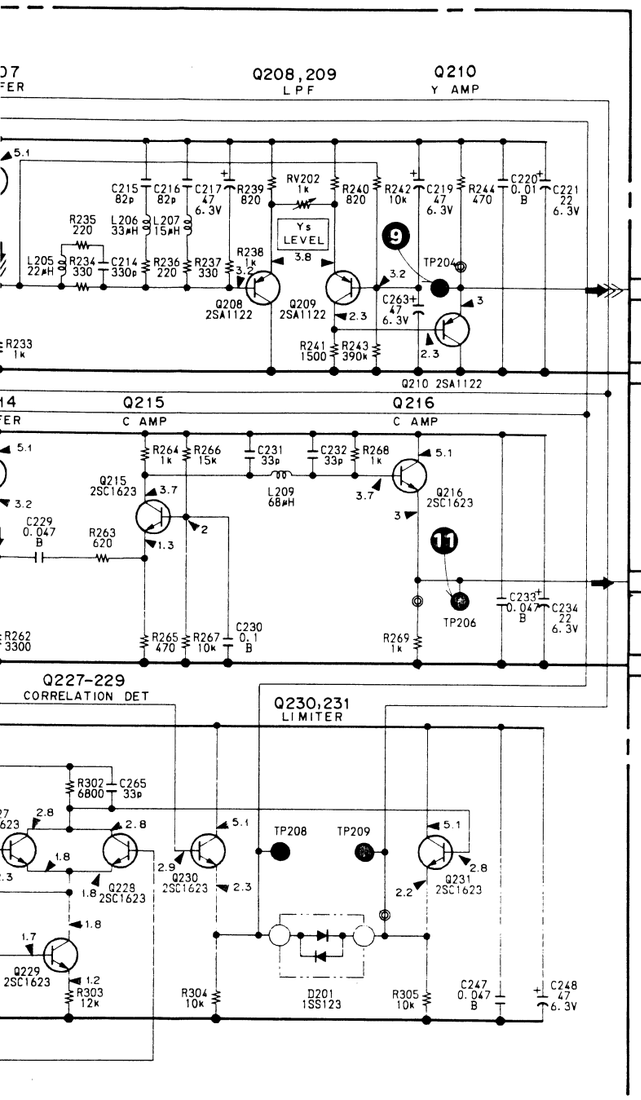

TO IF-20 BOARD (1/4)

(See Page 152)

IC201, IC202 (MC1496MR)

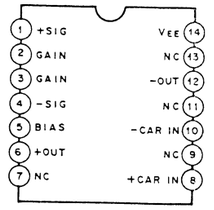

- **SIGNAL PATH**

	VIDEO SIGNAL			AUDIO SIGNAL
	CHROMA	Y	Y/CHROMA/DATA	
REC	➡	➡	➡	
PB				

IF-20 BOARD (2/4)

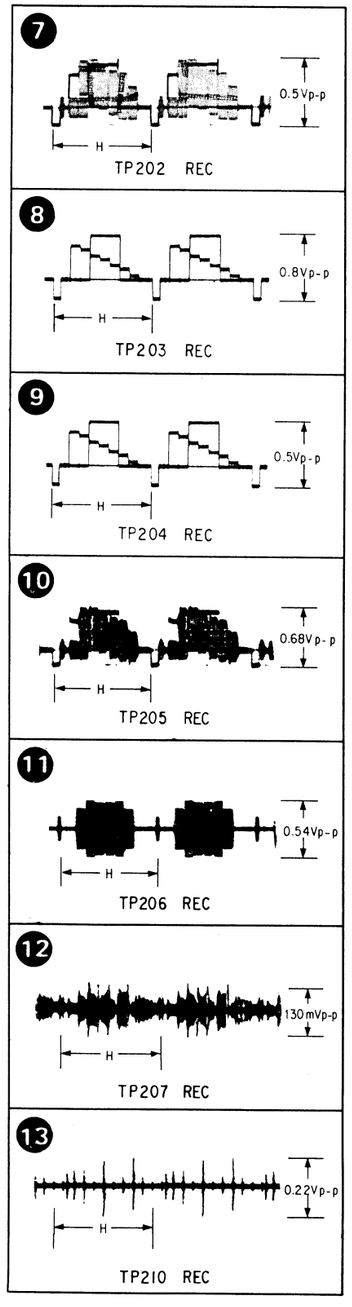

I -20 BOARD (3/4)

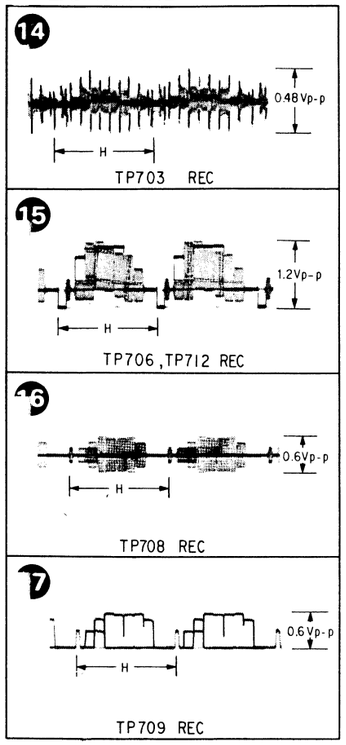

IC703 (CX22013)

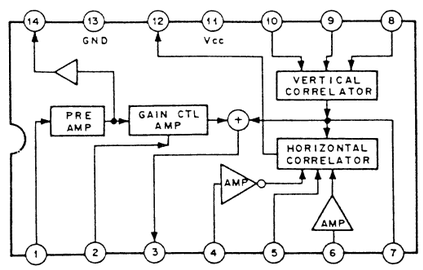

IC801, IC802 (CX20095A)

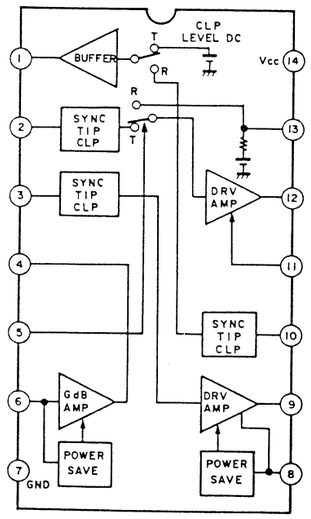

— Ref. No. IF-20 BOARD: 8000 series, JB-4, JB-5, TR-40 BOARD: 3000 series —

IF-20 BOARD (3/4)

no mark : REC/PB mode
( ) : REC mode
( ) : PB mode

IC701 TA7060AP LIMITER
IC702 AN607P LIMITER
IC703 CX22013 VERTICAL/HORIZONTAL CORRELATOR
IC704 SN6193 BALANCED MIXER
IC705 μPC311G COMPARATOR
IC801 CX20095A SYNC TIP CLAMP

Q701 Y AMP
Q702, 703 GCA
Q706 BUFFER
Q707, 708 EQ
Q709, 710 NON CORR 3.58MHz Y CANCELL
Q711, 712 MIX AMP
Q715 BUFFER
Q716 - 718 CHROMA AMP
Q719 BUFFER
Q721, 722 BUFFER

TO IF-20 BOARD (1/4): Y SEL OUT, Y SEL GND — (See Page 154)
TO IF-20 BOARD (1/4): C SEL OUT, C SEL GND — (See Page 154)
TO IF-20 BOARD (1/4): REG +5V, GND, REG +9V — (See Page 154)
TO IF-20 BOARD (1/4): W908 Y IN 1, Y GND 2, C IN 3, C GND 4 (INNER HARNESS) — (See Page 151)

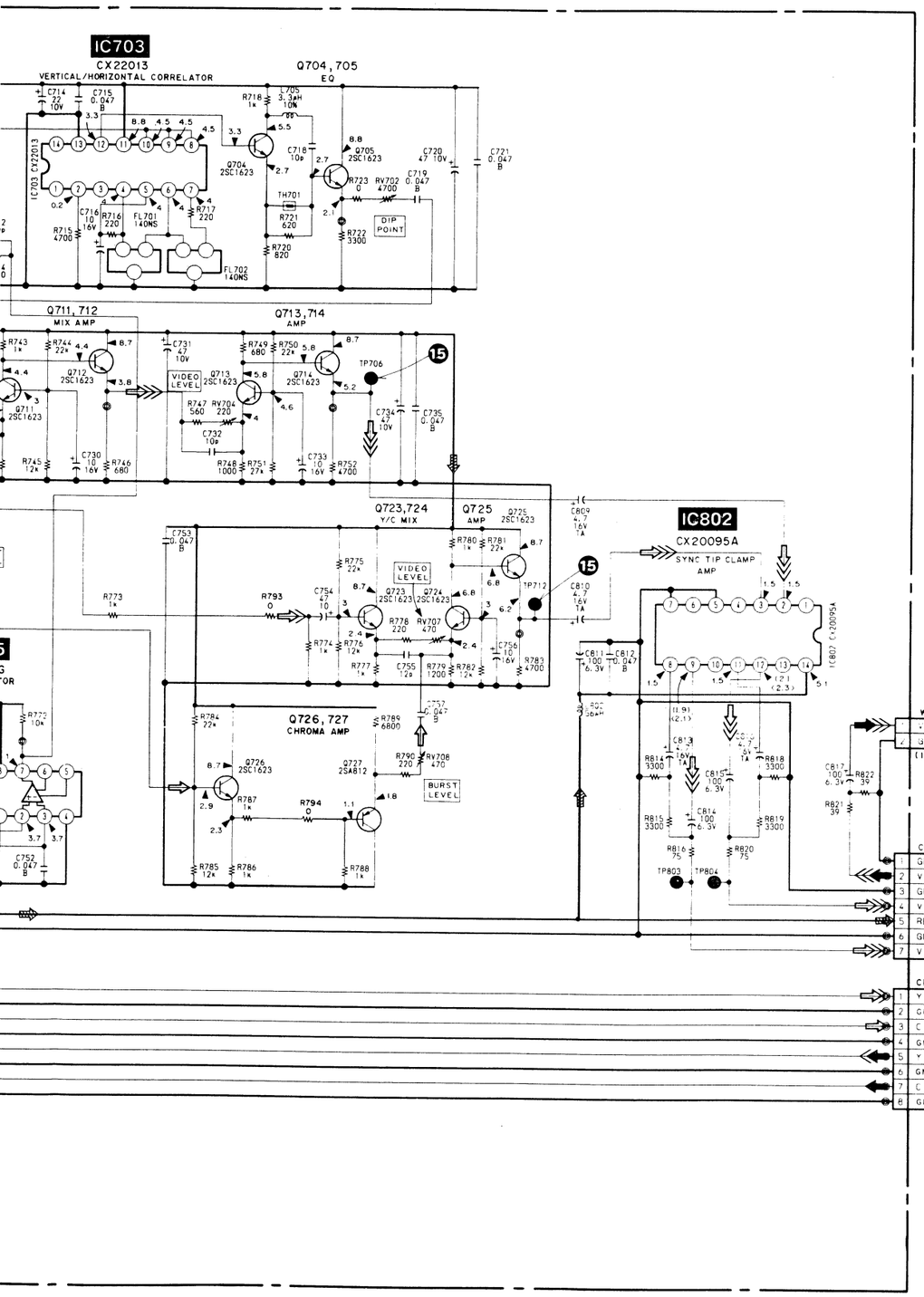

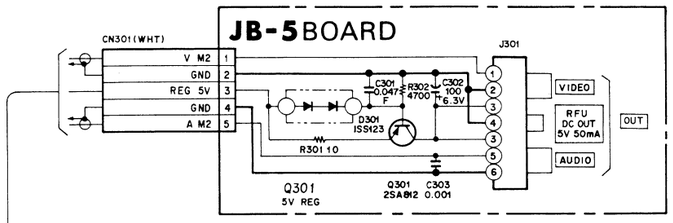

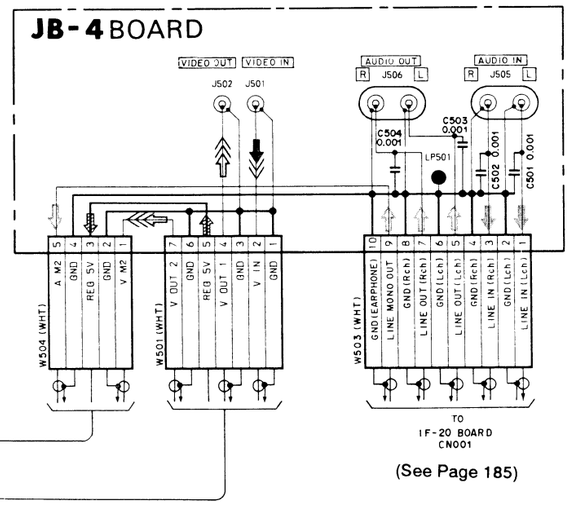

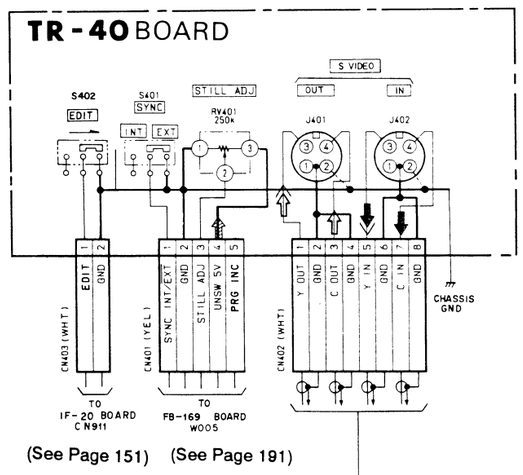

• **SIGNAL PATH**

	VIDEO SIGNAL			AUDIO SIGNAL
	CHROMA	Y	Y/CHROMA/DATA	
REC	➡	➡	➡	
PB	⇨	⇨	⇨	

IF-20 (VIDEO SIGNAL SELECT, SHARPNESS, NOISE CANCEL, YX FILTER, Y/C MIX, AUDIO SIGNAL SELECT), JB-4 (VIDEO, AUDIO JACK), JB-5 (VIDEO, AUDIO, RFU DC OUT JACK), TR-40 (S VIDEO JACK EDIT, SYNC SWITCH) PRINTED WIRING

— Ref. No. IF-20 BOARD: 8000 series, JB-4, JB-5, TR-40 BOARD: 3000 series —

IF-20 BOARD (COMPONENT SIDE)

		IF-20 BOARD (CONDUCTOR SIDE)	
D001	F-2	D002	E-1
D004	F-1	D003	F-1
D060	H-2	D010	H-3
D165	H-2	D051	E-2
D166	H-1	D052	G-1
D168	G-2	D053	F-1
D169	H-1	D054	G-2
D170	G-1	D167	H-1
D171	G-2	D201	B-3
D904	D-3	D901	D-2
		D902	D-2
IC001	G-3	D903	A-5
IC003	E-3		
IC004	E-1	IC601	D-4
IC005	F-1	IC602	D-5
IC006	G-1	IC603	E-5
IC051	H-3	IC701	H-4
IC054	E-2	IC702	H-5
IC055	F-2	IC703	G-5
IC056	G-2	IC704	G-4
IC165	G-1	IC801	I-4
IC201	A-2	IC802	J-4
IC202	B-2		
IC331	A-4	Q002	E-2
IC332	B-4	Q003	E-1
IC333	A-5	Q004	F-1
IC401	F-5	Q005	F-1
IC402	H-4	Q007	G-2
IC705	G-5	Q051	E-2
IC901	D-2	Q052	F-2
IC902	D-2	Q053	F-2
IC903	C-5	Q054	F-2
		Q055	F-2
Q001	E-1	Q056	G-2
Q006	G-2	Q061	H-2
Q008	G-1	Q165	H-2
Q010	H-3	Q167	H-2
Q011	H-2	Q168	H-2
Q057	G-2	Q169	H-3
Q060	H-3	Q170	H-1
Q166	H-2	Q171	H-1
Q179	H-1	Q172	G-2
Q180	H-1	Q174	H-1
Q182	H-2	Q175	H-1
Q184	H-2	Q176	H-1
Q188	G-1	Q177	G-1
Q191	I-3	Q178	G-1
Q206	A-1	Q181	H-1
Q213	B-2	Q183	H-2
Q222	B-3	Q186	H-1
Q223	C-2	Q201	B-1
Q224	B-3	Q202	B-1
Q225	B-3	Q203	B-1
Q226	B-3	Q204	B-1
Q227	C-3	Q205	A-2
Q228	C-3	Q207	A-2
Q334	A-5	Q208	A-2
Q407	G-4	Q209	A-3
Q408	G-4	Q210	A-3
Q409	G-4	Q211	C-1
Q412	H-4	Q212	B-1
Q414	G-4	Q214	B-2
Q503	C-4	Q215	B-2
Q504	C-4	Q216	B-3
Q507	C-5	Q217	C-1
Q508	C-5	Q220	C-2
Q510	C-5	Q221	B-2
Q517	F-4	Q229	B-2
Q518	F-5	Q230	C-3
Q521	C-5	Q231	C-3
Q607	E-5	Q233	C-2
Q614	E-5	Q234	C-3
Q702	H-5	Q330	A-4
Q703	H-5	Q331	B-4
Q704	H-5	Q332	A-5
Q705	H-5	Q333	B-5
Q707	I-5	Q335	A-4
Q708	I-5	Q336	A-5
Q709	I-5	Q337	A-5
Q710	I-5	Q338	A-5
Q711	J-5	Q339	B-4
Q716	I-5	Q340	B-5
Q717	I-5	Q341	B-5
Q718	I-5	Q342	B-4
Q721	J-5	Q401	F-5
Q722	G-5	Q402	F-5
Q724	J-5	Q403	F-5
Q725	J-5	Q404	E-5
Q901	D-3	Q405	F-5
Q906	A-5	Q406	F-5
Q907	A-5	Q410	H-4
		Q411	H-4
		Q413	F-5
		Q501	C-4
		Q502	C-4
		Q505	C-4
		Q506	C-5
		Q509	C-5
		Q511	D-5
		Q512	D-5
		Q513	C-4
		Q514	D-4
		Q515	F-4
		Q516	F-4
		Q519	F-4
		Q520	D-5
		Q601	D-4
		Q602	D-4
		Q603	D-4
		Q604	D-4
		Q605	D-4
		Q606	E-5
		Q608	E-5
		Q609	D-5
		Q610	D-5
		Q611	E-5
		Q612	E-5
		Q613	E-5
		Q615	E-5
		Q616	D-5
		Q701	H-5
		Q706	H-5
		Q712	J-5
		Q713	I-5
		Q714	I-5
		Q715	H-5
		Q719	G-5
		Q720	G-5
		Q723	J-5
		Q726	I-5
		Q727	I-5
		Q902	D-1
		Q903	D-2
		Q904	C-5
		Q905	B-5
		Q908	A-5
		Q909	A-5
		Q910	B-5
		Q911	D-3

\# A-7062-009-A IF-20 BOARD, COMPLETE

****

〈 DIODE 〉

D001	8-719-104-34 DIODE 1S2836	D165	8-719-400-18 DIODE MA152WK
D002	8-719-104-34 DIODE 1S2836	D166	8-719-400-18 DIODE MA152WK
D003	8-719-104-34 DIODE 1S2836	D167	8-719-800-76 DIODE 1SS226
D004	8-719-104-34 DIODE 1S2836	D168	8-719-800-76 DIODE 1SS226
D010	8-719-800-76 DIODE 1SS226	D169	8-719-800-76 DIODE 1SS226
		D170	8-719-800-76 DIODE 1SS226
D051	8-719-104-34 DIODE 1S2836	D171	8-719-104-34 DIODE 1S2836
D052	8-719-104-34 DIODE 1S2836	D201	8-719-800-76 DIODE 1SS226
D053	8-719-104-34 DIODE 1S2836	D901	8-719-400-18 DIODE MA152WK
D054	8-719-104-34 DIODE 1S2836	D902	8-719-400-18 DIODE MA152WK
D060	8-719-800-76 DIODE 1SS226	D903	8-719-104-34 DIODE 1S2836
		D904	8-719-400-18 DIODE MA152WK

〈 IC 〉

IC001	8-759-981-92 IC RC4558M	IC401	8-759-711-71 IC NJM2234M
IC003	8-759-981-92 IC RC4558M	IC402	8-759-711-71 IC NJM2234M
IC004	8-759-981-92 IC RC4558M	IC601	8-759-200-60 IC TA7060AP
IC005	8-759-932-64 IC BU4052BF	IC602	8-759-200-60 IC TA7060AP
IC006	8-759-981-92 IC RC4558M	IC603	8-759-400-06 IC AN608P
IC051	8-759-981-92 IC RC4558M	IC701	8-759-200-60 IC TA7060AP
IC054	8-759-981-92 IC RC4558M	IC702	8-759-402-33 IC AN607P
IC055	8-759-932-64 IC BU4052BF	IC703	8-752-201-30 IC CX22013
IC056	8-759-981-92 IC RC4558M	IC704	8-759-969-13 IC SN16913P
IC165	8-759-200-67 IC TC4001BF	IC705	8-759-101-12 IC uPC311G2
IC201	8-759-030-55 IC MC1496MR	IC801	8-752-009-51 IC CX20095A
IC202	8-759-030-55 IC MC1496MR	IC802	8-752-009-51 IC CX20095A
IC331	8-759-710-62 IC NJM2246M	IC901	8-759-009-10 IC MC14069UBF
IC332	8-759-710-62 IC NJM2246M	IC902	8-759-009-10 IC MC14069UBF
IC333	8-759-710-09 IC NJM2233AM	IC903	8-759-100-93 IC uPC393G2

〈 TRANSISTOR 〉

Q001	8-729-202-38 TRANSISTOR 2SC3326N	Q056	8-729-202-38 TRANSIS
Q002	8-729-202-38 TRANSISTOR 2SC3326N	Q057	8-729-202-38 TRANSIS
Q003	8-729-202-38 TRANSISTOR 2SC3326N	Q060	8-729-101-07 TRANSIS
Q004	8-729-202-38 TRANSISTOR 2SC3326N	Q061	8-729-901-01 TRANSIS
Q005	8-729-202-38 TRANSISTOR 2SC3326N	Q165	8-729-901-06 TRANSIS
		Q166	8-729-901-01 TRANSIS
Q006	8-729-202-38 TRANSISTOR 2SC3326N	Q167	8-729-100-66 TRANSIS
Q007	8-729-202-38 TRANSISTOR 2SC3326N	Q168	8-729-901-06 TRANSIS
Q008	8-729-202-38 TRANSISTOR 2SC3326N	Q169	8-729-901-06 TRANSIS
Q010	8-729-140-75 TRANSISTOR 2SD999	Q170	8-729-901-06 TRANSIS
Q011	8-729-901-06 TRANSISTOR DTA144EK		
		Q171	8-729-901-06 TRANSIS
Q051	8-729-202-38 TRANSISTOR 2SC3326N	Q172	8-729-100-66 TRANSIS
Q052	8-729-202-38 TRANSISTOR 2SC3326N	Q174	8-729-901-06 TRANSIS
Q053	8-729-202-38 TRANSISTOR 2SC3326N	Q175	8-729-901-06 TRANSIS
Q054	8-729-202-38 TRANSISTOR 2SC3326N	Q176	8-729-901-06 TRANSIS
Q055	8-729-202-38 TRANSISTOR 2SC3326N		

IF-20 BOARD (COMPONENT SIDE)

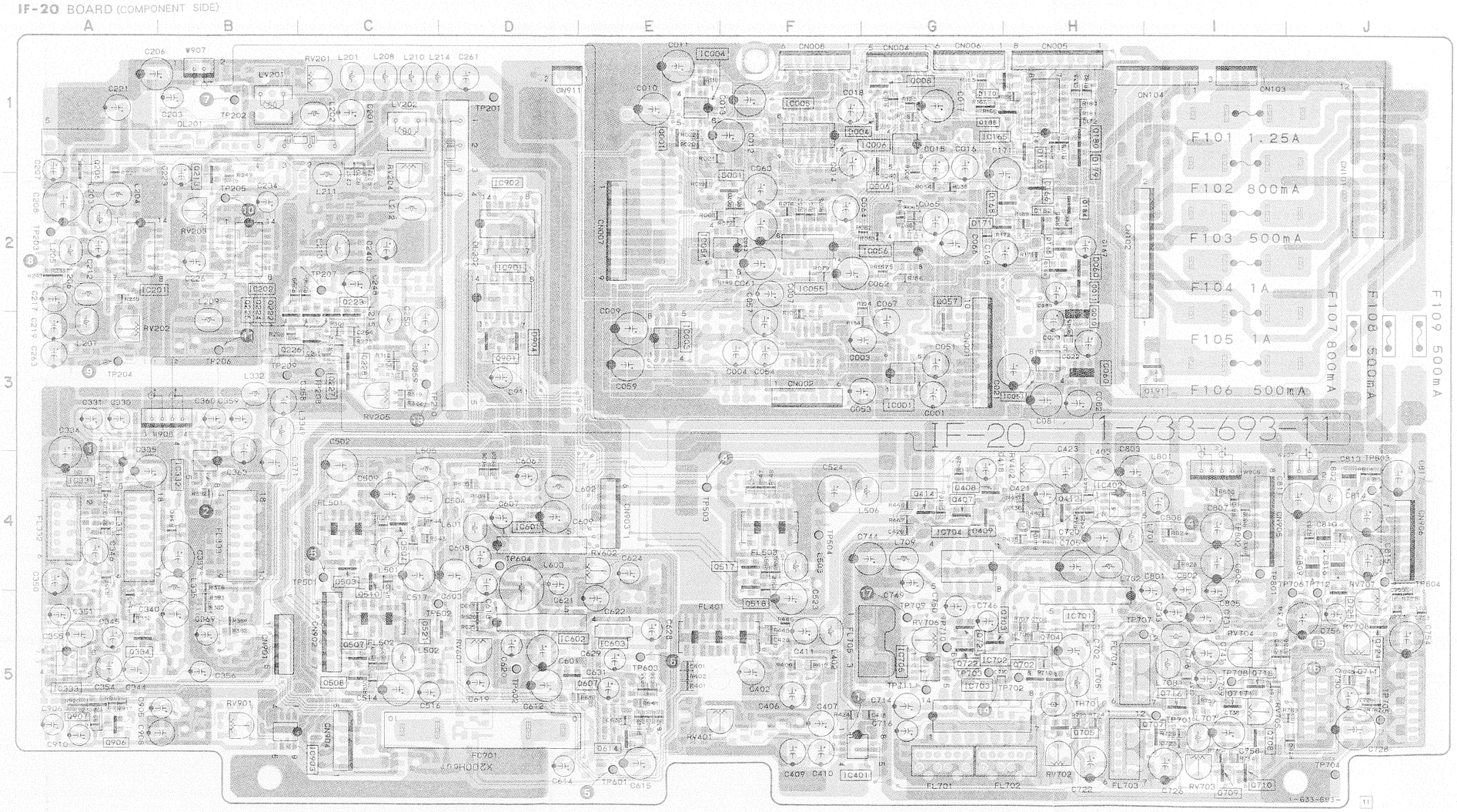

(SYNC SWITCH) PRINTED WIRING BOARDS

Q056	8-729-202-38 TRANSISTOR 2SC3326N	Q177	8-729-901-06 TRANSISTOR DTA144EK	Q210	8-729-320-17 TRANSISTOR 2SA1122CD	Q233	8-729-100-66 TRANSISTOR 2SC1623	Q406	8-729-100-66 TRANSISTOR 2SC1623	Q512	8-729-100-66 TRANSISTOR 2SC1623	Q611	8-729-100-6
Q057	8-729-202-38 TRANSISTOR 2SC3326N	Q178	8-729-901-01 TRANSISTOR DTC144EK	Q211	8-729-320-17 TRANSISTOR 2SA1122CD	Q234	8-729-100-66 TRANSISTOR 2SC1623	Q407	8-729-100-66 TRANSISTOR 2SC1623	Q513	8-729-100-66 TRANSISTOR 2SC1623	Q612	8-729-901-0
Q060	8-729-101-07 TRANSISTOR 2SB798	Q179	8-729-901-06 TRANSISTOR DTA144EK	Q212	8-729-100-66 TRANSISTOR 2SC1623	Q330	8-729-100-66 TRANSISTOR 2SC1623	Q408	8-729-100-66 TRANSISTOR 2SC1623	Q514	8-729-100-66 TRANSISTOR 2SC1623	Q613	8-729-901-0
Q061	8-729-901-01 TRANSISTOR DTC144EK	Q180	8-729-901-01 TRANSISTOR DTC144EK	Q213	8-729-100-66 TRANSISTOR 2SC1623	Q331	8-729-100-66 TRANSISTOR 2SC1623	Q409	8-729-100-66 TRANSISTOR 2SC1623	Q515	8-729-100-66 TRANSISTOR 2SC1623	Q614	8-729-901-0
Q165	8-729-901-06 TRANSISTOR DTA144EK	Q181	8-729-901-01 TRANSISTOR DTC144EK	Q214	8-729-100-66 TRANSISTOR 2SC1623	Q332	8-729-100-66 TRANSISTOR 2SC1623	Q410	8-729-100-66 TRANSISTOR 2SC1623	Q516	8-729-100-66 TRANSISTOR 2SC1623	Q615	8-729-901-0
Q166	8-729-901-01 TRANSISTOR DTC144EK	Q182	8-729-216-22 TRANSISTOR 2SA1162	Q215	8-729-100-66 TRANSISTOR 2SC1623	Q333	8-729-100-66 TRANSISTOR 2SC1623	Q411	8-729-100-66 TRANSISTOR 2SC1623	Q517	8-729-901-06 TRANSISTOR DTA144EK	Q616	8-729-901-0
Q167	8-729-100-66 TRANSISTOR 2SC1623	Q183	8-729-901-01 TRANSISTOR DTC144EK	Q216	8-729-100-66 TRANSISTOR 2SC1623	Q334	8-729-100-66 TRANSISTOR 2SC1623	Q412	8-729-100-66 TRANSISTOR 2SC1623	Q518	8-729-100-66 TRANSISTOR 2SC1623	Q701	8-729-100-6
Q168	8-729-901-06 TRANSISTOR DTA144EK	Q184	8-729-901-01 TRANSISTOR DTC144EK	Q217	8-729-100-66 TRANSISTOR 2SC1623	Q335	8-729-100-66 TRANSISTOR 2SC1623	Q413	8-729-100-66 TRANSISTOR 2SC1623	Q519	8-729-100-66 TRANSISTOR 2SC1623	Q702	8-729-100-6
Q169	8-729-901-06 TRANSISTOR DTA144EK	Q186	8-729-901-06 TRANSISTOR DTA144EK	Q220	8-729-100-66 TRANSISTOR 2SC1623	Q336	8-729-100-66 TRANSISTOR 2SC1623	Q414	8-729-100-66 TRANSISTOR 2SC1623	Q520	8-729-901-06 TRANSISTOR DTA144EK	Q703	8-729-202-3
Q170	8-729-901-06 TRANSISTOR DTA144EK	Q188	8-729-901-06 TRANSISTOR DTA144EK	Q221	8-729-100-66 TRANSISTOR 2SC1623	Q337	8-729-100-66 TRANSISTOR 2SC1623	Q501	8-729-100-66 TRANSISTOR 2SC1623	Q521	8-729-901-06 TRANSISTOR DTA144EK	Q704	8-729-100-6
Q171	8-729-901-06 TRANSISTOR DTA144EK	Q191	8-729-216-22 TRANSISTOR 2SA1162	Q222	8-729-100-66 TRANSISTOR 2SC1623	Q338	8-729-100-66 TRANSISTOR 2SC1623	Q502	8-729-100-66 TRANSISTOR 2SC1623	Q601	8-729-100-66 TRANSISTOR 2SC1623	Q705	8-729-100-6
Q172	8-729-100-66 TRANSISTOR 2SC1623	Q201	8-729-100-66 TRANSISTOR 2SC1623	Q223	8-729-100-66 TRANSISTOR 2SC1623	Q339	8-729-100-66 TRANSISTOR 2SC1623	Q503	8-729-901-06 TRANSISTOR DTA144EK	Q602	8-729-901-01 TRANSISTOR DTC144EK	Q706	8-729-100-6
Q174	8-729-901-06 TRANSISTOR DTA144EK	Q202	8-729-100-66 TRANSISTOR 2SC1623	Q224	8-729-100-66 TRANSISTOR 2SC1623	Q340	8-729-100-66 TRANSISTOR 2SC1623	Q504	8-729-100-66 TRANSISTOR 2SC1623	Q603	8-729-100-66 TRANSISTOR 2SC1623	Q707	8-729-100-6
Q175	8-729-901-06 TRANSISTOR DTA144EK	Q203	8-729-100-66 TRANSISTOR 2SC1623	Q225	8-729-100-66 TRANSISTOR 2SC1623	Q341	8-729-100-66 TRANSISTOR 2SC1623	Q505	8-729-100-66 TRANSISTOR 2SC1623	Q604	8-729-100-66 TRANSISTOR 2SC1623	Q708	8-729-100-6
Q176	8-729-901-06 TRANSISTOR DTA144EK	Q204	8-729-320-17 TRANSISTOR 2SA1122CD	Q226	8-729-320-17 TRANSISTOR 2SA1122CD	Q342	8-729-100-66 TRANSISTOR 2SC1623	Q506	8-729-100-66 TRANSISTOR 2SC1623	Q605	8-729-100-66 TRANSISTOR 2SC1623	Q709	8-729-100-6
		Q205	8-729-100-66 TRANSISTOR 2SC1623	Q227	8-729-100-66 TRANSISTOR 2SC1623	Q401	8-729-100-66 TRANSISTOR 2SC1623	Q507	8-729-901-06 TRANSISTOR DTA144EK	Q606	8-729-100-66 TRANSISTOR 2SC1623	Q710	8-729-100-6
		Q206	8-729-100-66 TRANSISTOR 2SC1623	Q228	8-729-100-66 TRANSISTOR 2SC1623	Q402	8-729-100-66 TRANSISTOR 2SC1623	Q508	8-729-100-66 TRANSISTOR 2SC1623	Q607	8-729-100-66 TRANSISTOR 2SC1623	Q711	8-729-100-6
		Q207	8-729-100-66 TRANSISTOR 2SC1623	Q229	8-729-100-66 TRANSISTOR 2SC1623	Q403	8-729-100-66 TRANSISTOR 2SC1623	Q509	8-729-100-66 TRANSISTOR 2SC1623	Q608	8-729-100-66 TRANSISTOR 2SC1623	Q712	8-729-100-6
		Q208	8-729-320-17 TRANSISTOR 2SA1122CD	Q230	8-729-100-66 TRANSISTOR 2SC1623	Q404	8-729-100-66 TRANSISTOR 2SC1623	Q510	8-729-100-66 TRANSISTOR 2SC1623	Q609	8-729-100-66 TRANSISTOR 2SC1623	Q713	8-729-100-6
		Q209	8-729-320-17 TRANSISTOR 2SA1122CD	Q231	8-729-100-66 TRANSISTOR 2SC1623	Q405	8-729-100-66 TRANSISTOR 2SC1623	Q511	8-729-100-66 TRANSISTOR 2SC1623	Q610	8-729-100-66 TRANSISTOR 2SC1623	Q714	8-729-100-6
												Q715	8-729-100-6
												Q716	8-729-100-6
												Q717	8-729-100-6
												Q718	8-729-100-6
												Q719	8-729-100-6

IF-20 BOARD (CONDUCTOR SIDE)

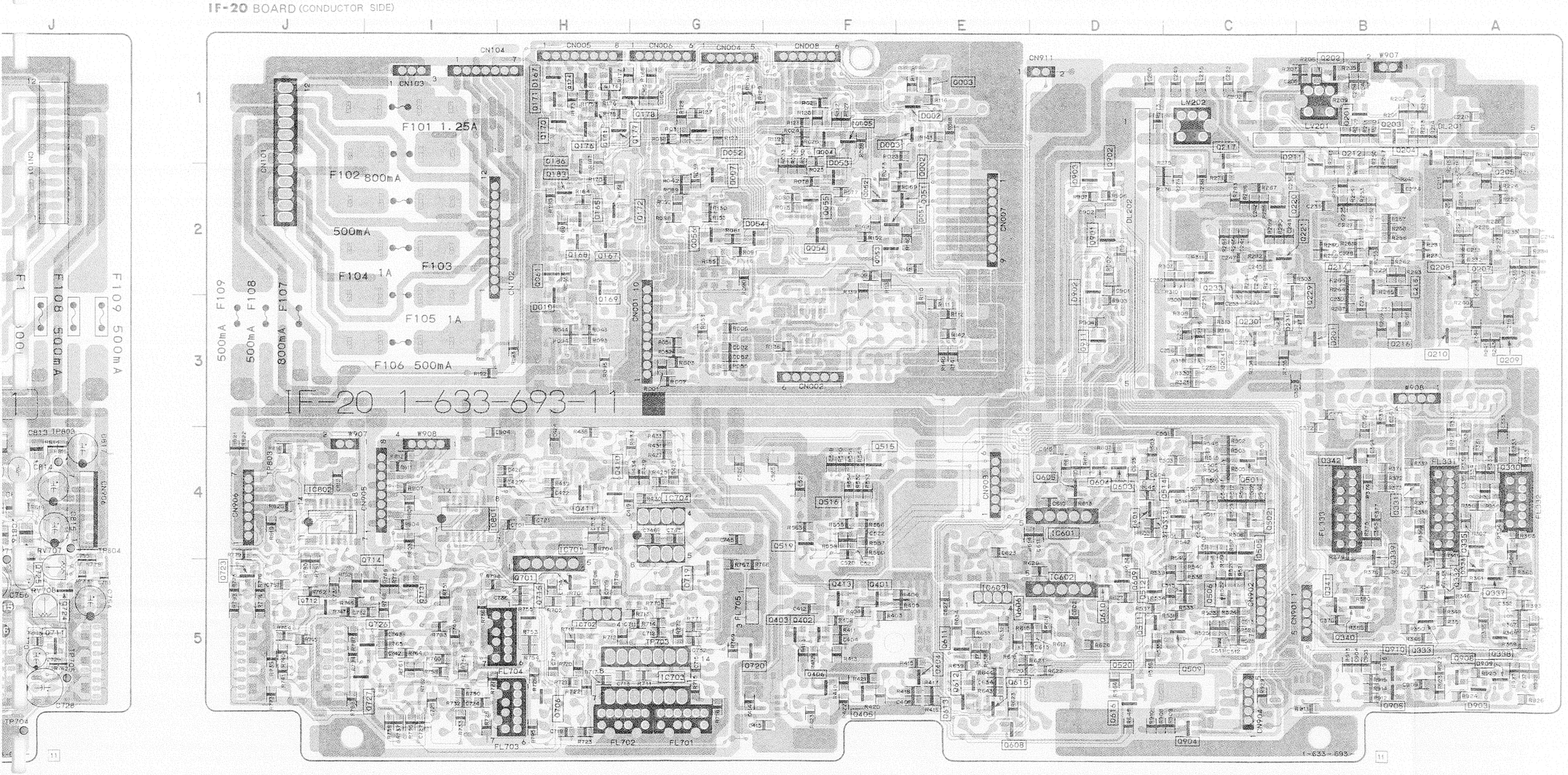

TR-40 BOARD (CONDUCTOR SIDE)

JB-4 BOARD (CONDUCTOR SIDE)

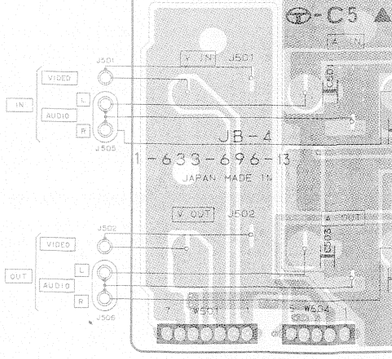

144EK	Q210	8-729-320-17 TRANSISTOR 2SA1122CD	Q233	8-729-100-66 TRANSISTOR 2SC1623	Q406	8-729-100-66 TRANSISTOR 2SC1623	Q512	8-729-100-66 TRANSISTOR 2SC1623	Q611	8-729-100-66 TRANSISTOR 2SC1623	Q720	8-729-100-66 TRANSISTOR 2SC1623
14 K	Q211	8-729-320-17 TRANSISTOR 2SA1122CD	Q234	8-729-100-66 TRANSISTOR 2SC1623	Q407	8-729-100-66 TRANSISTOR 2SC1623	Q513	8-729-100-66 TRANSISTOR 2SC1623	Q612	8-729-901-06 TRANSISTOR DTA144EK	Q721	8-729-320-17 TRANSISTOR 2SA1122CD
14 K	Q212	8-729-100-66 TRANSISTOR 2SC1623	Q330	8-729-100-66 TRANSISTOR 2SC1623	Q408	8-729-100-66 TRANSISTOR 2SC1623	Q514	8-729-100-66 TRANSISTOR 2SC1623	Q613	8-729-901-01 TRANSISTOR DTC144EK	Q722	8-729-100-66 TRANSISTOR 2SC1623
144EK	Q213	8-729-100-66 TRANSISTOR 2SC1623	Q331	8-729-100-66 TRANSISTOR 2SC1623	Q409	8-729-100-66 TRANSISTOR 2SC1623	Q515	8-729-100-66 TRANSISTOR 2SC1623	Q614	8-729-901-01 TRANSISTOR DTC144EK	Q723	8-729-100-66 TRANSISTOR 2SC1623
144EK	Q214	8-729-100-66 TRANSISTOR 2SC1623	Q332	8-729-100-66 TRANSISTOR 2SC1623	Q410	8-729-100-66 TRANSISTOR 2SC1623	Q516	8-729-100-66 TRANSISTOR 2SC1623	Q615	8-729-901-06 TRANSISTOR DTA144EK	Q724	8-729-100-66 TRANSISTOR 2SC1623
11	Q215	8-729-100-66 TRANSISTOR 2SC1623	Q333	8-729-100-66 TRANSISTOR 2SC1623	Q411	8-729-100-66 TRANSISTOR 2SC1623	Q517	8-729-901-06 TRANSISTOR DTA144EK	Q616	8-729-901-06 TRANSISTOR DTA144EK		
144EK	Q216	8-729-100-66 TRANSISTOR 2SC1623	Q334	8-729-100-66 TRANSISTOR 2SC1623	Q412	8-729-100-66 TRANSISTOR 2SC1623	Q518	8-729-100-66 TRANSISTOR 2SC1623	Q701	8-729-100-66 TRANSISTOR 2SC1623	Q725	8-729-100-66 TRANSISTOR 2SC1623
144EK	Q217	8-729-100-66 TRANSISTOR 2SC1623	Q335	8-729-100-66 TRANSISTOR 2SC1623	Q413	8-729-100-66 TRANSISTOR 2SC1623	Q519	8-729-100-66 TRANSISTOR 2SC1623	Q702	8-729-100-66 TRANSISTOR 2SC1623	Q726	8-729-100-66 TRANSISTOR 2SC1623
14 K	Q220	8-729-100-66 TRANSISTOR 2SC1623	Q336	8-729-100-66 TRANSISTOR 2SC1623	Q414	8-729-100-66 TRANSISTOR 2SC1623	Q520	8-729-901-06 TRANSISTOR DTA144EK	Q703	8-729-202-38 TRANSISTOR 2SC3326N	Q727	8-729-216-22 TRANSISTOR 2SA1162
14 K	Q221	8-729-100-66 TRANSISTOR 2SC1623	Q337	8-729-100-66 TRANSISTOR 2SC1623	Q501	8-729-100-66 TRANSISTOR 2SC1623	Q521	8-729-901-06 TRANSISTOR DTA144EK	Q704	8-729-100-66 TRANSISTOR 2SC1623	Q901	8-729-901-01 TRANSISTOR DTC144EK
1162	Q222	8-729-100-66 TRANSISTOR 2SC1623	Q338	8-729-100-66 TRANSISTOR 2SC1623	Q502	8-729-100-66 TRANSISTOR 2SC1623	Q601	8-729-100-66 TRANSISTOR 2SC1623	Q705	8-729-100-66 TRANSISTOR 2SC1623	Q902	8-729-901-01 TRANSISTOR DTC144EK
16	Q223	8-729-100-66 TRANSISTOR 2SC1623	Q339	8-729-100-66 TRANSISTOR 2SC1623	Q503	8-729-901-06 TRANSISTOR DTA144EK	Q602	8-729-901-01 TRANSISTOR DTC144EK	Q706	8-729-100-66 TRANSISTOR 2SC1623	Q903	8-729-901-01 TRANSISTOR DTC144EK
16	Q224	8-729-100-66 TRANSISTOR 2SC1623	Q340	8-729-100-66 TRANSISTOR 2SC1623	Q504	8-729-100-66 TRANSISTOR 2SC1623	Q603	8-729-100-66 TRANSISTOR 2SC1623	Q707	8-729-100-66 TRANSISTOR 2SC1623	Q904	8-729-901-01 TRANSISTOR DTC144EK
1623	Q225	8-729-100-66 TRANSISTOR 2SC1623	Q341	8-729-100-66 TRANSISTOR 2SC1623	Q505	8-729-100-66 TRANSISTOR 2SC1623	Q604	8-729-100-66 TRANSISTOR 2SC1623	Q708	8-729-100-66 TRANSISTOR 2SC1623	Q905	8-729-901-05 TRANSISTOR DTA124EK
1122CD	Q226	8-729-320-17 TRANSISTOR 2SA1122CD	Q342	8-729-100-66 TRANSISTOR 2SC1623	Q506	8-729-100-66 TRANSISTOR 2SC1623	Q605	8-729-100-66 TRANSISTOR 2SC1623	Q709	8-729-100-66 TRANSISTOR 2SC1623	Q906	8-729-100-66 TRANSISTOR 2SC1623
16	Q227	8-729-100-66 TRANSISTOR 2SC1623	Q401	8-729-100-66 TRANSISTOR 2SC1623	Q507	8-729-901-06 TRANSISTOR DTA144EK	Q606	8-729-100-66 TRANSISTOR 2SC1623	Q710	8-729-100-66 TRANSISTOR 2SC1623	Q907	8-729-100-66 TRANSISTOR 2SC1623
1623	Q228	8-729-100-66 TRANSISTOR 2SC1623	Q402	8-729-100-66 TRANSISTOR 2SC1623	Q508	8-729-100-66 TRANSISTOR 2SC1623	Q607	8-729-100-66 TRANSISTOR 2SC1623	Q711	8-729-100-66 TRANSISTOR 2SC1623		
1623	Q229	8-729-100-66 TRANSISTOR 2SC1623	Q403	8-729-100-66 TRANSISTOR 2SC1623	Q509	8-729-100-66 TRANSISTOR 2SC1623	Q608	8-729-100-66 TRANSISTOR 2SC1623	Q712	8-729-100-66 TRANSISTOR 2SC1623	Q908	8-729-100-66 TRANSISTOR 2SC1623
11 CD	Q230	8-729-100-66 TRANSISTOR 2SC1623	Q404	8-729-100-66 TRANSISTOR 2SC1623	Q510	8-729-100-66 TRANSISTOR 2SC1623	Q609	8-729-100-66 TRANSISTOR 2SC1623	Q713	8-729-100-66 TRANSISTOR 2SC1623	Q909	8-729-100-66 TRANSISTOR 2SC1623
11 CD	Q231	8-729-100-66 TRANSISTOR 2SC1623	Q405	8-729-100-66 TRANSISTOR 2SC1623	Q511	8-729-100-66 TRANSISTOR 2SC1623	Q610	8-729-100-66 TRANSISTOR 2SC1623	Q714	8-729-100-66 TRANSISTOR 2SC1623	Q910	8-729-100-66 TRANSISTOR 2SC1623
											Q911	8-729-901-06 TRANSISTOR DTA144EK
									Q715	8-729-100-66 TRANSISTOR 2SC1623		
									Q716	8-729-100-66 TRANSISTOR 2SC1623		
									Q717	8-729-100-66 TRANSISTOR 2SC1623		
									Q718	8-729-100-66 TRANSISTOR 2SC1623		
									Q719	8-729-100-66 TRANSISTOR 2SC1623		

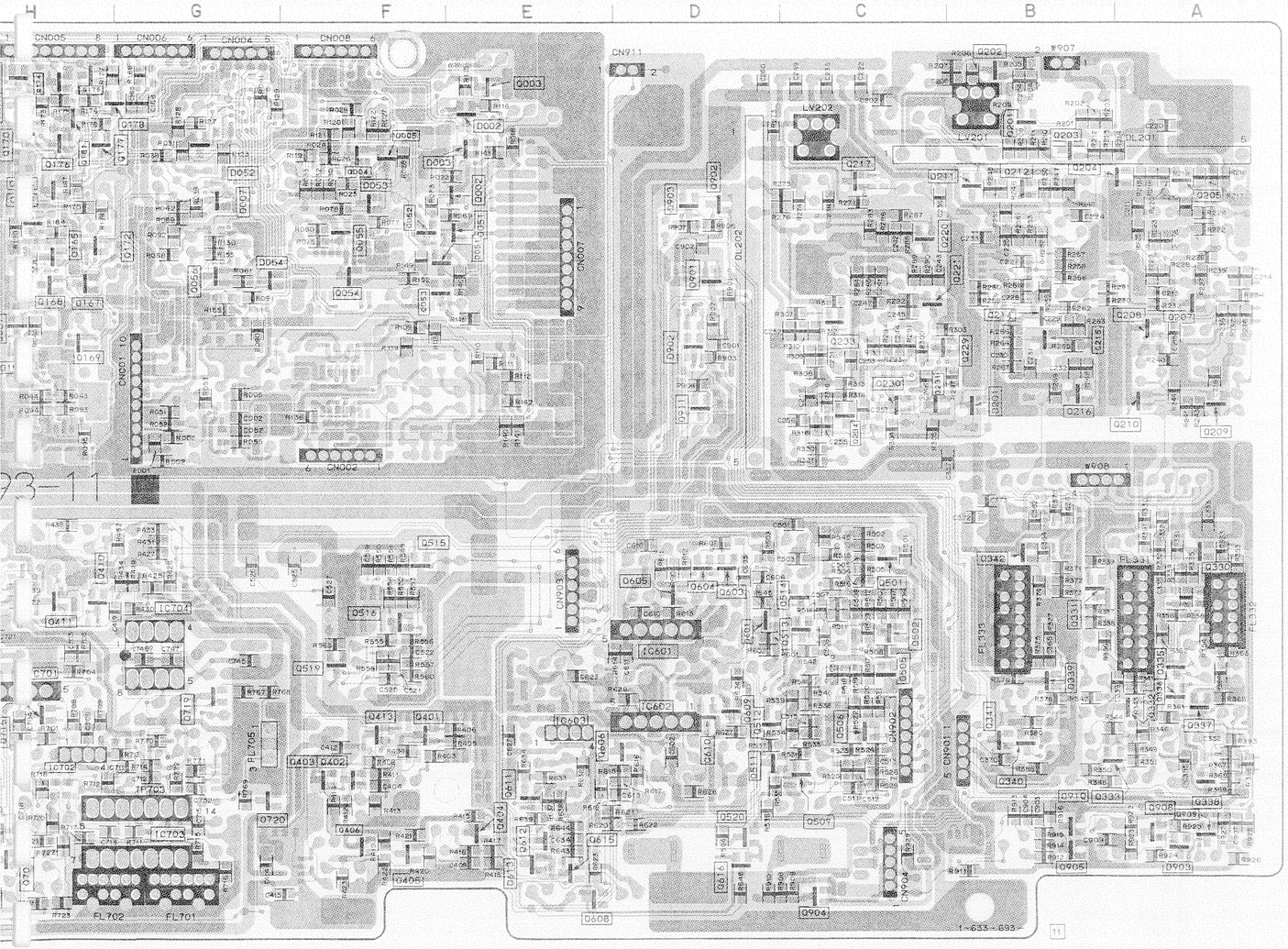

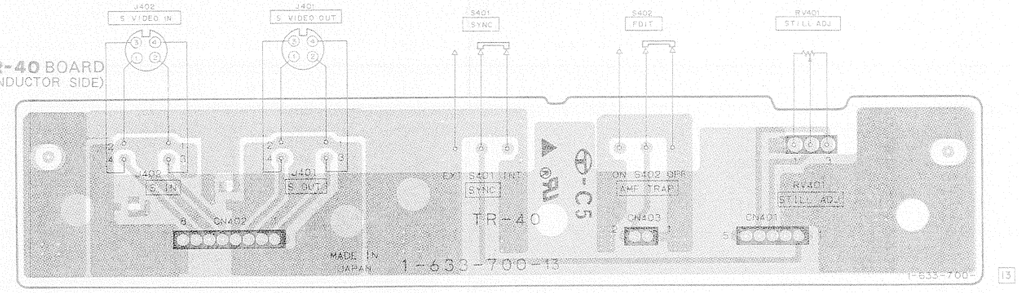

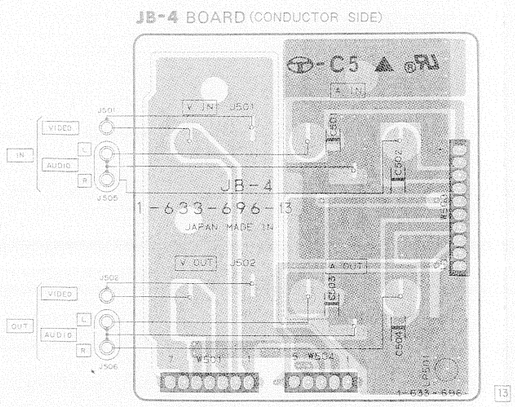

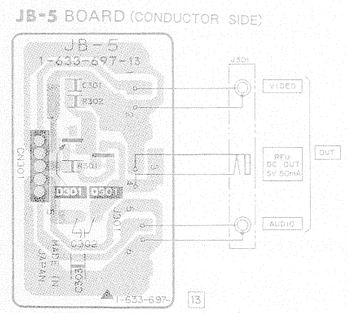

* 1-633-697-11 JB-5 BOARD

****

〈 DIODE 〉

D301 8-719-800-76 DIODE 1SS226

〈 TRANSISTOR 〉

Q301 8-729-216-22 TRANSISTOR 2SA1162

IF-20 (VIDEO SIGNAL SELECT, SHARPNESS, NOISE CANCEL, YX FILTER, Y/C MIX, AUDIO SIGNAL SELECT), JB-4 (VIDEO, AUDIO JACK), JB-5 (VIDEO, AUDIO, RFU DC OUT JACK), TR-40 (S VIDEO JACK EDIT, SYNC SWITCH) PRINTED WIRING BO

— Ref. No. IF-20 BOARD: 8000 series, JB-4, JB-5, TR-40 BOARD: 3000 series —

IF-20 BOARD (COMPONENT SIDE)

D001	F-2
D004	F-1
D060	H-2
D165	H-2
D166	H-1
D168	G-2
D169	H-1
D170	G-1
D171	G-2
D904	D-3
IC001	G-3
IC003	E-3
IC004	E-1
IC005	F-1
IC006	G-1
IC051	H-3
IC054	E-2
IC055	F-2
IC056	G-2
IC165	G-1
IC201	A-2
IC202	B-2
IC331	A-4
IC332	B-4
IC333	A-5
IC401	F-5
IC402	H-4
IC705	G-5
IC901	D-2
IC902	D-2
IC903	C-5
Q001	E-1
Q006	G-2
Q008	G-1
Q010	H-3
Q011	H-2
Q057	G-2
Q060	H-3
Q166	H-2
Q179	H-1
Q180	H-1
Q182	H-2
Q184	H-2
Q188	G-1
Q191	I-3
Q206	A-1
Q213	B-2
Q222	B-3
Q223	C-2
Q224	B-3
Q225	B-3
Q226	B-3
Q227	C-3
Q228	C-3
Q334	A-5
Q407	G-4
Q408	G-4
Q409	G-4
Q412	H-4
Q414	G-4
Q503	C-4
Q504	C-4
Q507	C-5
Q508	C-5
Q510	C-5
Q517	F-4
Q518	F-5
Q521	C-5
Q607	E-5
Q614	E-5
Q702	H-5
Q703	H-5
Q704	H-5
Q705	H-5
Q707	I-5
Q708	I-5
Q709	I-5
Q710	I-5
Q711	J-5
Q716	I-5
Q717	I-5
Q718	I-5
Q721	J-5
Q722	G-5
Q724	J-5
Q725	J-5
Q901	D-3
Q906	A-5
Q907	A-5

IF-20 BOARD (CONDUCTOR SIDE)

D002	E-1
D003	F-1
D010	H-3
D051	E-2
D052	G-1
D053	F-1
D054	G-2
D167	H-1
D201	B-3
D901	D-2
D902	D-2
D903	A-5
IC601	D-4
IC602	D-5
IC603	E-5
IC701	H-4
IC702	H-5
IC703	G-5
IC704	G-4
IC801	I-4
IC802	J-4
Q002	E-2
Q003	E-1
Q004	F-1
Q005	F-1
Q007	G-2
Q051	E-2
Q052	F-2
Q053	F-2
Q054	F-2
Q055	F-2
Q056	G-2
Q061	H-2
Q165	H-2
Q167	H-2
Q168	H-2
Q169	H-3
Q170	H-1
Q171	H-1
Q172	G-2
Q174	H-1
Q175	H-1
Q176	H-1
Q177	G-1
Q178	G-1
Q181	H-1
Q183	H-2
Q186	H-1
Q201	B-1
Q202	B-1
Q203	B-1
Q204	B-1
Q205	A-2
Q207	A-2
Q208	A-2
Q209	A-3
Q210	A-3
Q211	C-1
Q212	B-1
Q214	B-2
Q215	B-2
Q216	B-3
Q217	C-1
Q220	C-2
Q221	B-2
Q229	B-2
Q230	C-3
Q231	C-3
Q233	C-2
Q234	C-3
Q330	A-4
Q331	B-4
Q332	A-5
Q333	B-5
Q335	A-4
Q336	A-5
Q337	A-5
Q338	A-5
Q339	B-4
Q340	B-5
Q341	B-5
Q342	B-4
Q401	F-5
Q402	F-5
Q403	F-5
Q404	E-5
Q405	F-5
Q406	F-5
Q410	H-4
Q411	H-4
Q413	F-5
Q501	C-4
Q502	C-4
Q505	C-4
Q506	C-5
Q509	C-5
Q511	D-5
Q512	D-5
Q513	C-4
Q514	D-4
Q515	F-4
Q516	F-4
Q519	F-4
Q520	D-5
Q601	D-4
Q602	D-4
Q603	D-4
Q604	D-4
Q605	D-4
Q606	E-5
Q608	E-5
Q609	D-5
Q610	D-5
Q611	E-5
Q612	E-5
Q613	E-5
Q615	E-5
Q616	D-5
Q701	H-5
Q706	H-5
Q712	J-5
Q713	I-5
Q714	I-5
Q715	H-5
Q719	G-5
Q720	G-5
Q723	J-5
Q726	I-5
Q727	I-5
Q902	D-1
Q903	D-2
Q904	C-5
Q905	B-5
Q908	A-5
Q909	A-5
Q910	B-5
Q911	D-3

* A-7062-009-A IF-20 BOARD, COMPLETE

****

〈 DIODE 〉

D001	8-719-104-34 DIODE 1S2836
D002	8-719-104-34 DIODE 1S2836
D003	8-719-104-34 DIODE 1S2836
D004	8-719-104-34 DIODE 1S2836
D010	8-719-800-76 DIODE 1SS226
D051	8-719-104-34 DIODE 1S2836
D052	8-719-104-34 DIODE 1S2836
D053	8-719-104-34 DIODE 1S2836
D054	8-719-104-34 DIODE 1S2836
D060	8-719-800-76 DIODE 1SS226
D165	8-719-400-18 DIODE MA152WK
D166	8-719-400-18 DIODE MA152WK
D167	8-719-800-76 DIODE 1SS226
D168	8-719-800-76 DIODE 1SS226
D169	8-719-800-76 DIODE 1SS226
D170	8-719-800-76 DIODE 1SS226
D171	8-719-104-34 DIODE 1S2836
D201	8-719-800-76 DIODE 1SS226
D901	8-719-400-18 DIODE MA152WK
D902	8-719-400-18 DIODE MA152WK
D903	8-719-104-34 DIODE 1S2836
D904	8-719-400-18 DIODE MA152WK

〈 IC 〉

IC001	8-759-981-92 IC RC4558M
IC003	8-759-981-92 IC RC4558M
IC004	8-759-981-92 IC RC4558M
IC005	8-759-932-64 IC BU4052BF
IC006	8-759-981-92 IC RC4558M
IC051	8-759-981-92 IC RC4558M
IC054	8-759-981-92 IC RC4558M
IC055	8-759-932-64 IC BU4052BF
IC056	8-759-981-92 IC RC4558M
IC165	8-759-200-67 IC TC4001BF
IC201	8-759-030-55 IC MC1496MR
IC202	8-759-030-55 IC MC1496MR
IC331	8-759-710-62 IC NJM2246M
IC332	8-759-710-62 IC NJM2246M
IC333	8-759-710-09 IC NJM2233AM
IC401	8-759-711-71 IC NJM2234M
IC402	8-759-711-71 IC NJM2234M
IC601	8-759-200-60 IC TA7060AP
IC602	8-759-200-60 IC TA7060AP
IC603	8-759-400-06 IC AN608P
IC701	8-759-200-60 IC TA7060AP
IC702	8-759-402-33 IC AN607P
IC703	8-752-201-30 IC CX22013
IC704	8-759-969-13 IC SN16913P
IC705	8-759-101-12 IC uPC311G2
IC801	8-752-009-51 IC CX20095A
IC802	8-752-009-51 IC CX20095A
IC901	8-759-009-10 IC MC14069UBF
IC902	8-759-009-10 IC MC14069UBF
IC903	8-759-100-93 IC uPC393G2

〈 TRANSISTOR 〉

Q001	8-729-202-38 TRANSISTOR 2SC3326N
Q002	8-729-202-38 TRANSISTOR 2SC3326N
Q003	8-729-202-38 TRANSISTOR 2SC3326N
Q004	8-729-202-38 TRANSISTOR 2SC3326N
Q005	8-729-202-38 TRANSISTOR 2SC3326N
Q006	8-729-202-38 TRANSISTOR 2SC3326N
Q007	8-729-202-38 TRANSISTOR 2SC3326N
Q008	8-729-202-38 TRANSISTOR 2SC3326N
Q010	8-729-140-75 TRANSISTOR 2SD999
Q011	8-729-901-06 TRANSISTOR DTA144EK
Q051	8-729-202-38 TRANSISTOR 2SC3326N
Q052	8-729-202-38 TRANSISTOR 2SC3326N
Q053	8-729-202-38 TRANSISTOR 2SC3326N
Q054	8-729-202-38 TRANSISTOR 2SC3326N
Q055	8-729-202-38 TRANSISTOR 2SC3326N
Q056	8-729-202-38 TRANSISTOR 2
Q057	8-729-202-38 TRANSISTOR 2
Q060	8-729-101-07 TRANSISTOR 2
Q061	8-729-901-01 TRANSISTOR D
Q165	8-729-901-06 TRANSISTOR D
Q166	8-729-901-01 TRANSISTOR D
Q167	8-729-100-66 TRANSISTOR 2
Q168	8-729-901-06 TRANSISTOR D
Q169	8-729-901-06 TRANSISTOR D
Q170	8-729-901-06 TRANSISTOR D
Q171	8-729-901-06 TRANSISTOR D
Q172	8-729-100-66 TRANSISTOR 2
Q174	8-729-901-06 TRANSISTOR D
Q175	8-729-901-06 TRANSISTOR D
Q176	8-729-901-06 TRANSISTOR D

IF-20 BOARD (COMPONENT SIDE)

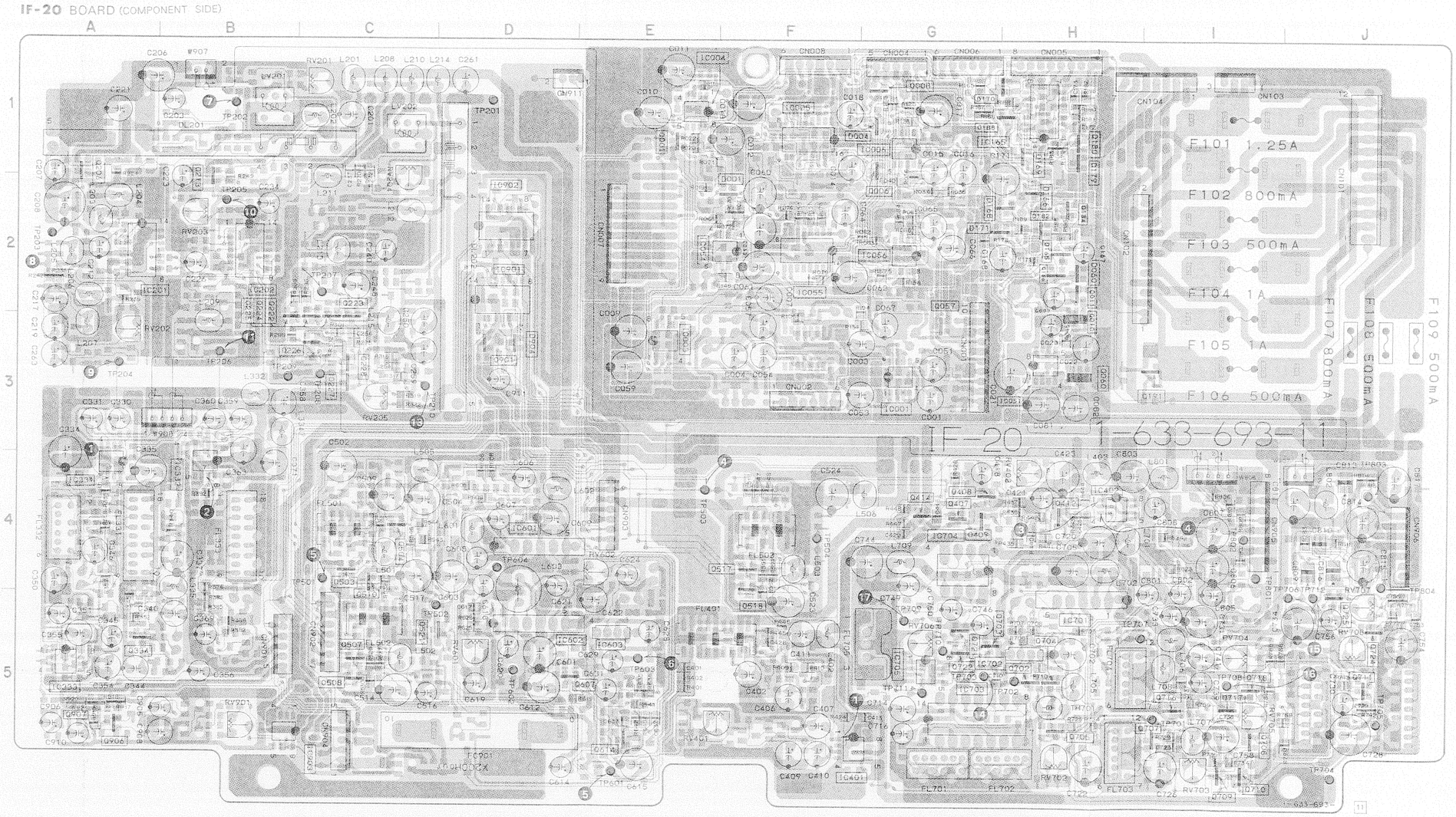

IDEO JACK EDIT, SYNC SWITCH) PRINTED WIRING BOARDS

〈 TRANSISTOR 〉

02-	TRANSISTOR 2SC3326N	
02-	TRANSISTOR 2SC3326N	
02-38	TRANSISTOR 2SC3326N	
02-38	TRANSISTOR 2SC3326N	
02-	TRANSISTOR 2SC3326N	
02-38	TRANSISTOR 2SC3326N	
02-38	TRANSISTOR 2SC3326N	
02-	TRANSISTOR 2SC3326N	
40-	TRANSISTOR 2SD999	
01-06	TRANSISTOR DTA144EK	
02-	TRANSISTOR 2SC3326N	
02-	TRANSISTOR 2SC3326N	
02-38	TRANSISTOR 2SC3326N	
02-38	TRANSISTOR 2SC3326N	
02-	TRANSISTOR 2SC3326N	

Q056	8-729-202-38	TRANSISTOR 2SC3326N
Q057	8-729-202-38	TRANSISTOR 2SC3326N
Q060	8-729-101-07	TRANSISTOR 2SB798
Q061	8-729-901-01	TRANSISTOR DTC144EK
Q165	8-729-901-06	TRANSISTOR DTA144EK
Q166	8-729-901-01	TRANSISTOR DTC144EK
Q167	8-729-100-66	TRANSISTOR 2SC1623
Q168	8-729-901-06	TRANSISTOR DTA144EK
Q169	8-729-901-06	TRANSISTOR DTA144EK
Q170	8-729-901-06	TRANSISTOR DTA144EK
Q171	8-729-901-06	TRANSISTOR DTA144EK
Q172	8-729-100-66	TRANSISTOR 2SC1623
Q174	8-729-901-06	TRANSISTOR DTA144EK
Q175	8-729-901-06	TRANSISTOR DTA144EK
Q176	8-729-901-06	TRANSISTOR DTA144EK

Q177	8-729-901-06	TRANSISTOR DTA144EK
Q178	8-729-901-01	TRANSISTOR DTC144EK
Q179	8-729-901-06	TRANSISTOR DTA144EK
Q180	8-729-901-01	TRANSISTOR DTC144EK
Q181	8-729-901-01	TRANSISTOR DTC144EK
Q182	8-729-216-22	TRANSISTOR 2SA1162
Q183	8-729-901-01	TRANSISTOR DTC144EK
Q184	8-729-901-01	TRANSISTOR DTC144EK
Q186	8-729-901-06	TRANSISTOR DTA144EK
Q188	8-729-901-06	TRANSISTOR DTA144EK
Q191	8-729-216-22	TRANSISTOR 2SA1162
Q201	8-729-100-66	TRANSISTOR 2SC1623
Q202	8-729-100-66	TRANSISTOR 2SC1623
Q203	8-729-100-66	TRANSISTOR 2SC1623
Q204	8-729-320-17	TRANSISTOR 2SA1122CD
Q205	8-729-100-66	TRANSISTOR 2SC1623
Q206	8-729-100-66	TRANSISTOR 2SC1623
Q207	8-729-100-66	TRANSISTOR 2SC1623
Q208	8-729-320-17	TRANSISTOR 2SA1122CD
Q209	8-729-320-17	TRANSISTOR 2SA1122CD

Q210	8-729-320-17	TRANSISTOR 2SA1122CD
Q211	8-729-320-17	TRANSISTOR 2SA1122CD
Q212	8-729-100-66	TRANSISTOR 2SC1623
Q213	8-729-100-66	TRANSISTOR 2SC1623
Q214	8-729-100-66	TRANSISTOR 2SC1623
Q215	8-729-100-66	TRANSISTOR 2SC1623
Q216	8-729-100-66	TRANSISTOR 2SC1623
Q217	8-729-100-66	TRANSISTOR 2SC1623
Q220	8-729-100-66	TRANSISTOR 2SC1623
Q221	8-729-100-66	TRANSISTOR 2SC1623
Q222	8-729-100-66	TRANSISTOR 2SC1623
Q223	8-729-100-66	TRANSISTOR 2SC1623
Q224	8-729-100-66	TRANSISTOR 2SC1623
Q225	8-729-100-66	TRANSISTOR 2SC1623
Q226	8-729-320-17	TRANSISTOR 2SA1122CD
Q227	8-729-100-66	TRANSISTOR 2SC1623
Q228	8-729-100-66	TRANSISTOR 2SC1623
Q229	8-729-100-66	TRANSISTOR 2SC1623
Q230	8-729-100-66	TRANSISTOR 2SC1623
Q231	8-729-100-66	TRANSISTOR 2SC1623

Q233	8-729-100-66	TRANSISTOR 2SC1623
Q234	8-729-100-66	TRANSISTOR 2SC1623
Q330	8-729-100-66	TRANSISTOR 2SC1623
Q331	8-729-100-66	TRANSISTOR 2SC1623
Q332	8-729-100-66	TRANSISTOR 2SC1623
Q333	8-729-100-66	TRANSISTOR 2SC1623
Q334	8-729-100-66	TRANSISTOR 2SC1623
Q335	8-729-100-66	TRANSISTOR 2SC1623
Q336	8-729-100-66	TRANSISTOR 2SC1623
Q337	8-729-100-66	TRANSISTOR 2SC1623
Q338	8-729-100-66	TRANSISTOR 2SC1623
Q339	8-729-100-66	TRANSISTOR 2SC1623
Q340	8-729-100-66	TRANSISTOR 2SC1623
Q341	8-729-100-66	TRANSISTOR 2SC1623
Q342	8-729-100-66	TRANSISTOR 2SC1623
Q401	8-729-100-66	TRANSISTOR 2SC1623
Q402	8-729-100-66	TRANSISTOR 2SC1623
Q403	8-729-100-66	TRANSISTOR 2SC1623
Q404	8-729-100-66	TRANSISTOR 2SC1623
Q405	8-729-100-66	TRANSISTOR 2SC1623

Q406	8-729-100-66	TRANSISTOR 2SC1623
Q407	8-729-100-66	TRANSISTOR 2SC1623
Q408	8-729-100-66	TRANSISTOR 2SC1623
Q409	8-729-100-66	TRANSISTOR 2SC1623
Q410	8-729-100-66	TRANSISTOR 2SC1623
Q411	8-729-100-66	TRANSISTOR 2SC1623
Q412	8-729-100-66	TRANSISTOR 2SC1623
Q413	8-729-100-66	TRANSISTOR 2SC1623
Q414	8-729-100-66	TRANSISTOR 2SC1623
Q501	8-729-100-66	TRANSISTOR 2SC1623
Q502	8-729-100-66	TRANSISTOR 2SC1623
Q503	8-729-901-06	TRANSISTOR DTA144EK
Q504	8-729-100-66	TRANSISTOR 2SC1623
Q505	8-729-100-66	TRANSISTOR 2SC1623
Q506	8-729-100-66	TRANSISTOR 2SC1623
Q507	8-729-901-06	TRANSISTOR DTA144EK
Q508	8-729-100-66	TRANSISTOR 2SC1623
Q509	8-729-100-66	TRANSISTOR 2SC1623
Q510	8-729-100-66	TRANSISTOR 2SC1623
Q511	8-729-100-66	TRANSISTOR 2SC1623

Q512	8-729-100-66	TRANSISTOR 2SC1623
Q513	8-729-100-66	TRANSISTOR 2SC1623
Q514	8-729-100-66	TRANSISTOR 2SC1623
Q515	8-729-100-66	TRANSISTOR 2SC1623
Q516	8-729-100-66	TRANSISTOR 2SC1623
Q517	8-729-901-06	TRANSISTOR DTA144EK
Q518	8-729-100-66	TRANSISTOR 2SC1623
Q519	8-729-100-66	TRANSISTOR 2SC1623
Q520	8-729-901-06	TRANSISTOR DTA144EK
Q521	8-729-901-06	TRANSISTOR DTA144EK
Q601	8-729-100-66	TRANSISTOR 2SC1623
Q602	8-729-901-01	TRANSISTOR DTC144EK
Q603	8-729-100-66	TRANSISTOR 2SC1623
Q604	8-729-100-66	TRANSISTOR 2SC1623
Q605	8-729-100-66	TRANSISTOR 2SC1623
Q606	8-729-100-66	TRANSISTOR 2SC1623
Q607	8-729-100-66	TRANSISTOR 2SC1623
Q608	8-729-100-66	TRANSISTOR 2SC1623
Q609	8-729-100-66	TRANSISTOR 2SC1623
Q610	8-729-100-66	TRANSISTOR 2SC1623

IF-20 BOARD (CONDUCTOR SIDE)

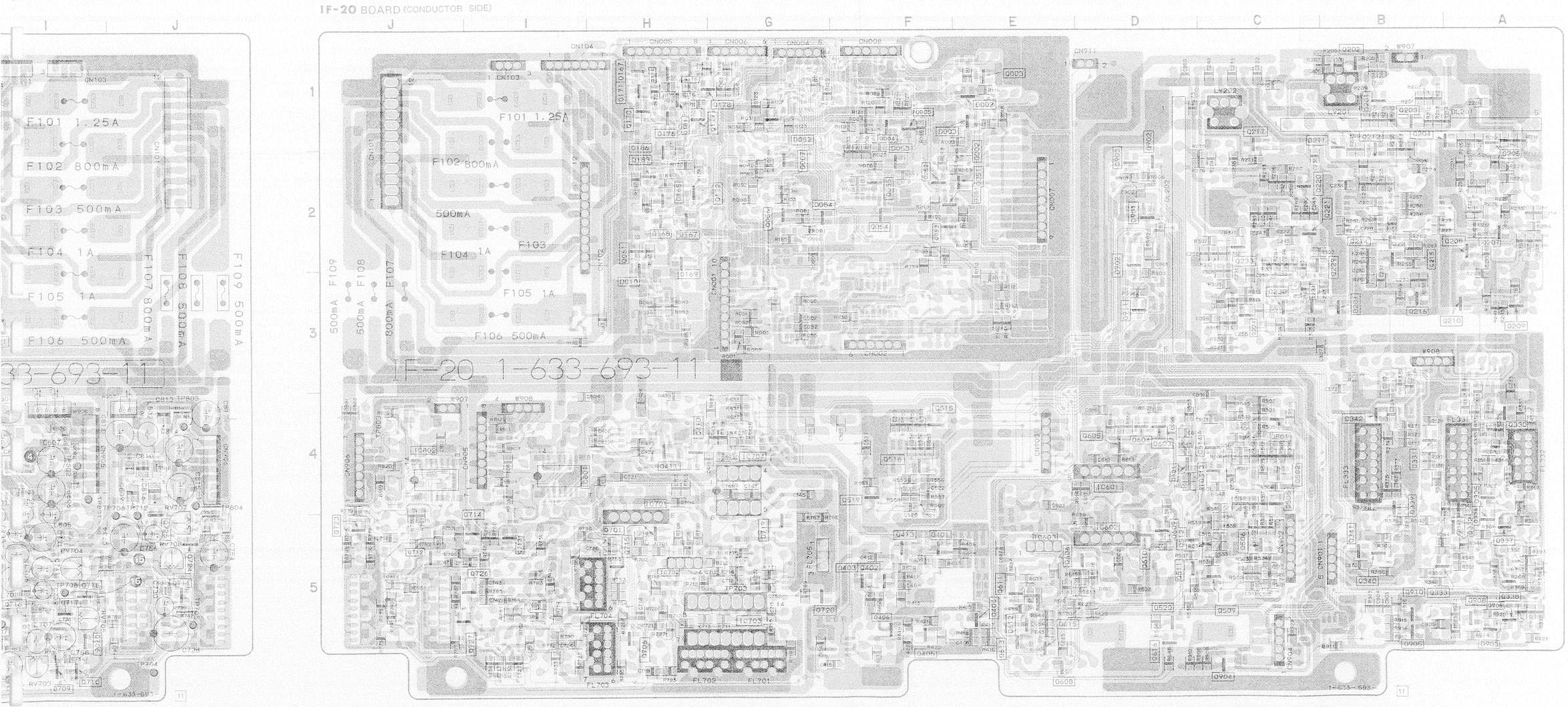

TR-40 BOARD (CONDUCTOR SIDE)

Q210	8-729-320-17 TRANSISTOR 2SA1122CD	Q233	8-729-100-66 TRANSISTOR 2SC1623	Q406	8-729-100-66 TRANSISTOR 2SC1623	Q512	8-729-100-66 TRANSISTOR 2SC1623	Q611	8-729-100-66 TRANSISTOR 2SC1623	Q720	8-729-100-66 TRANSISTOR 2SC1623
Q211	8-729-320-17 TRANSISTOR 2SA1122CD	Q234	8-729-100-66 TRANSISTOR 2SC1623	Q407	8-729-100-66 TRANSISTOR 2SC1623	Q513	8-729-100-66 TRANSISTOR 2SC1623	Q612	8-729-901-06 TRANSISTOR DTA144EK	Q721	8-729-320-17 TRANSISTOR 2SA1122CD
Q212	8-729-100-66 TRANSISTOR 2SC1623	Q330	8-729-100-66 TRANSISTOR 2SC1623	Q408	8-729-100-66 TRANSISTOR 2SC1623	Q514	8-729-100-66 TRANSISTOR 2SC1623	Q613	8-729-901-01 TRANSISTOR DTC144EK	Q722	8-729-100-66 TRANSISTOR 2SC1623
Q213	8-729-100-66 TRANSISTOR 2SC1623	Q331	8-729-100-66 TRANSISTOR 2SC1623	Q409	8-729-100-66 TRANSISTOR 2SC1623	Q515	8-729-100-66 TRANSISTOR 2SC1623	Q614	8-729-901-01 TRANSISTOR DTC144EK	Q723	8-729-100-66 TRANSISTOR 2SC1623
Q214	8-729-100-66 TRANSISTOR 2SC1623	Q332	8-729-100-66 TRANSISTOR 2SC1623	Q410	8-729-100-66 TRANSISTOR 2SC1623	Q516	8-729-100-66 TRANSISTOR 2SC1623	Q615	8-729-901-06 TRANSISTOR DTA144EK	Q724	8-729-100-66 TRANSISTOR 2SC1623
Q215	8-729-100-66 TRANSISTOR 2SC1623	Q333	8-729-100-66 TRANSISTOR 2SC1623	Q411	8-729-100-66 TRANSISTOR 2SC1623	Q517	8-729-901-06 TRANSISTOR DTA144EK	Q616	8-729-901-06 TRANSISTOR DTA144EK	Q725	8-729-100-66 TRANSISTOR 2SC1623
Q216	8-729-100-66 TRANSISTOR 2SC1623	Q334	8-729-100-66 TRANSISTOR 2SC1623	Q412	8-729-100-66 TRANSISTOR 2SC1623	Q518	8-729-100-66 TRANSISTOR 2SC1623	Q701	8-729-100-66 TRANSISTOR 2SC1623	Q726	8-729-100-66 TRANSISTOR 2SC1623
Q217	8-729-100-66 TRANSISTOR 2SC1623	Q335	8-729-100-66 TRANSISTOR 2SC1623	Q413	8-729-100-66 TRANSISTOR 2SC1623	Q519	8-729-100-66 TRANSISTOR 2SC1623	Q702	8-729-100-66 TRANSISTOR 2SC1623	Q727	8-729-216-22 TRANSISTOR 2SA1162
Q220	8-729-100-66 TRANSISTOR 2SC1623	Q336	8-729-100-66 TRANSISTOR 2SC1623	Q414	8-729-100-66 TRANSISTOR 2SC1623	Q520	8-729-901-06 TRANSISTOR DTA144EK	Q703	8-729-202-38 TRANSISTOR 2SC3326N	Q901	8-729-901-01 TRANSISTOR DTC144EK
Q221	8-729-100-66 TRANSISTOR 2SC1623	Q337	8-729-100-66 TRANSISTOR 2SC1623	Q501	8-729-100-66 TRANSISTOR 2SC1623	Q521	8-729-901-06 TRANSISTOR DTA144EK	Q704	8-729-100-66 TRANSISTOR 2SC1623	Q902	8-729-901-01 TRANSISTOR DTC144EK
Q222	8-729-100-66 TRANSISTOR 2SC1623	Q338	8-729-100-66 TRANSISTOR 2SC1623	Q502	8-729-100-66 TRANSISTOR 2SC1623	Q601	8-729-100-66 TRANSISTOR 2SC1623	Q705	8-729-100-66 TRANSISTOR 2SC1623	Q903	8-729-901-01 TRANSISTOR DTC144EK
Q223	8-729-100-66 TRANSISTOR 2SC1623	Q339	8-729-100-66 TRANSISTOR 2SC1623	Q503	8-729-901-06 TRANSISTOR DTA144EK	Q602	8-729-901-01 TRANSISTOR DTC144EK	Q706	8-729-100-66 TRANSISTOR 2SC1623	Q904	8-729-901-01 TRANSISTOR DTC144EK
Q224	8-729-100-66 TRANSISTOR 2SC1623	Q340	8-729-100-66 TRANSISTOR 2SC1623	Q504	8-729-100-66 TRANSISTOR 2SC1623	Q603	8-729-100-66 TRANSISTOR 2SC1623	Q707	8-729-100-66 TRANSISTOR 2SC1623	Q905	8-729-901-05 TRANSISTOR DTA124EK
Q225	8-729-100-66 TRANSISTOR 2SC1623	Q341	8-729-100-66 TRANSISTOR 2SC1623	Q505	8-729-100-66 TRANSISTOR 2SC1623	Q604	8-729-100-66 TRANSISTOR 2SC1623	Q708	8-729-100-66 TRANSISTOR 2SC1623	Q906	8-729-100-66 TRANSISTOR 2SC1623
Q226	8-729-320-17 TRANSISTOR 2SA1122CD	Q342	8-729-100-66 TRANSISTOR 2SC1623	Q506	8-729-100-66 TRANSISTOR 2SC1623	Q605	8-729-100-66 TRANSISTOR 2SC1623	Q709	8-729-100-66 TRANSISTOR 2SC1623	Q907	8-729-100-66 TRANSISTOR 2SC1623
Q227	8-729-100-66 TRANSISTOR 2SC1623	Q401	8-729-100-66 TRANSISTOR 2SC1623	Q507	8-729-901-06 TRANSISTOR DTA144EK	Q606	8-729-100-66 TRANSISTOR 2SC1623	Q710	8-729-100-66 TRANSISTOR 2SC1623	Q908	8-729-100-66 TRANSISTOR 2SC1623
Q228	8-729-100-66 TRANSISTOR 2SC1623	Q402	8-729-100-66 TRANSISTOR 2SC1623	Q508	8-729-100-66 TRANSISTOR 2SC1623	Q607	8-729-100-66 TRANSISTOR 2SC1623	Q711	8-729-100-66 TRANSISTOR 2SC1623	Q909	8-729-100-66 TRANSISTOR 2SC1623
Q229	8-729-100-66 TRANSISTOR 2SC1623	Q403	8-729-100-66 TRANSISTOR 2SC1623	Q509	8-729-100-66 TRANSISTOR 2SC1623	Q608	8-729-100-66 TRANSISTOR 2SC1623	Q712	8-729-100-66 TRANSISTOR 2SC1623	Q910	8-729-100-66 TRANSISTOR 2SC1623
Q230	8-729-100-66 TRANSISTOR 2SC1623	Q404	8-729-100-66 TRANSISTOR 2SC1623	Q510	8-729-100-66 TRANSISTOR 2SC1623	Q609	8-729-100-66 TRANSISTOR 2SC1623	Q713	8-729-100-66 TRANSISTOR 2SC1623	Q911	8-729-901-06 TRANSISTOR DTA144EK
Q231	8-729-100-66 TRANSISTOR 2SC1623	Q405	8-729-100-66 TRANSISTOR 2SC1623	Q511	8-729-100-66 TRANSISTOR 2SC1623	Q610	8-729-100-66 TRANSISTOR 2SC1623	Q714	8-729-100-66 TRANSISTOR 2SC1623		
								Q715	8-729-100-66 TRANSISTOR 2SC1623		
								Q716	8-729-100-66 TRANSISTOR 2SC1623		
								Q717	8-729-100-66 TRANSISTOR 2SC1623		
								Q718	8-729-100-66 TRANSISTOR 2SC1623		
								Q719	8-729-100-66 TRANSISTOR 2SC1623		

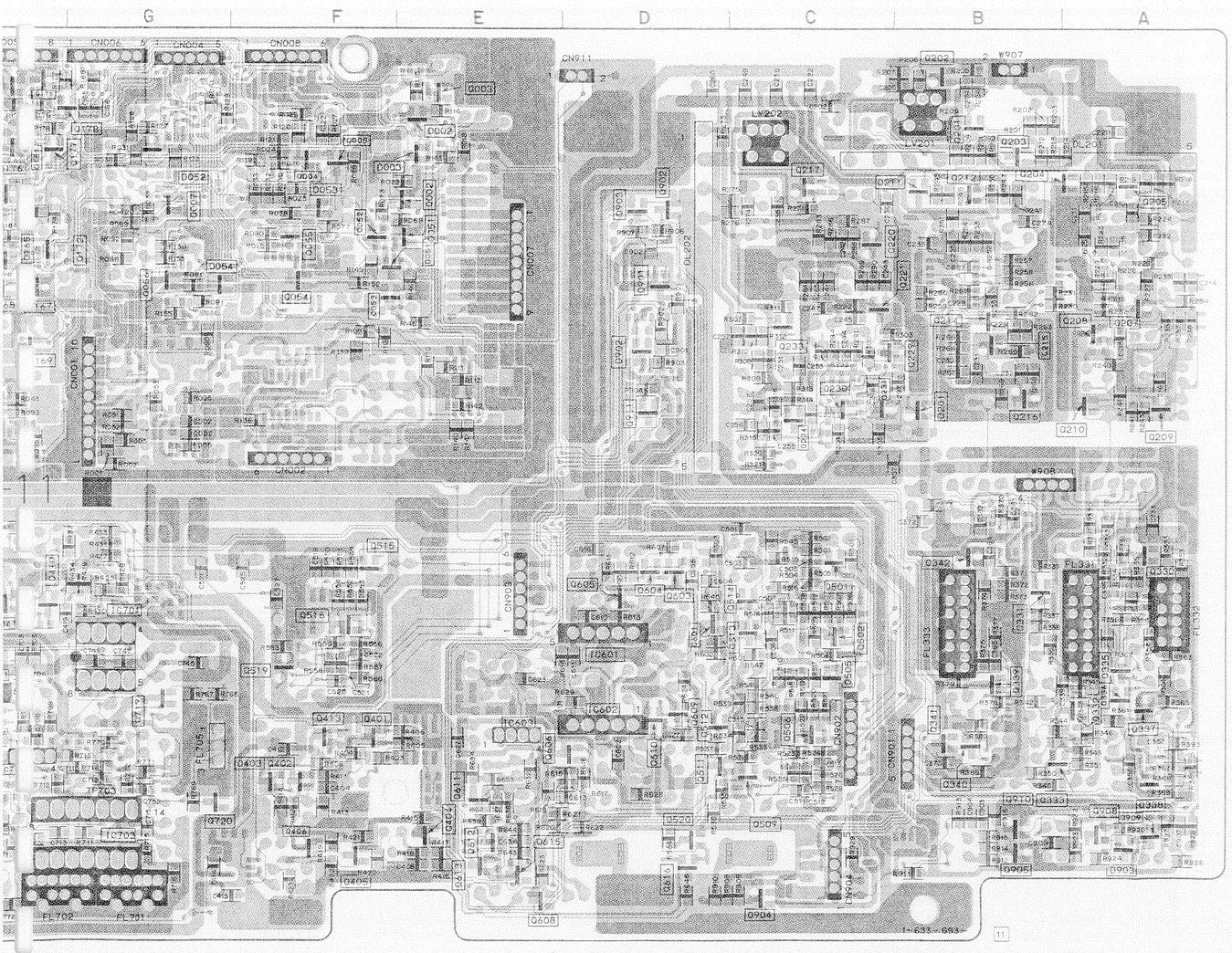

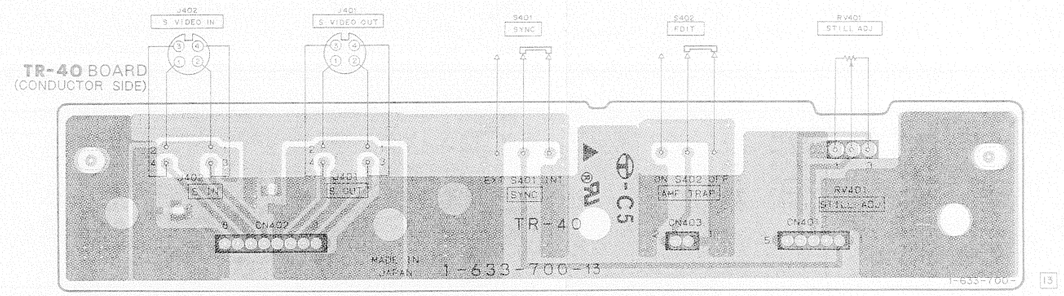

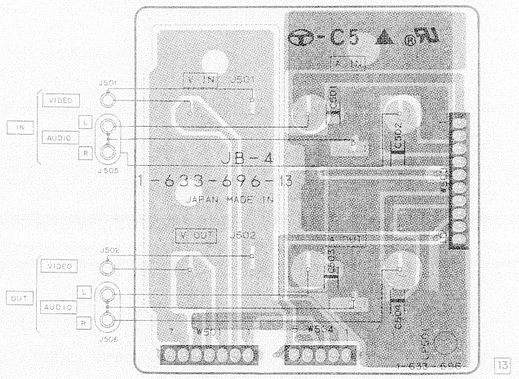

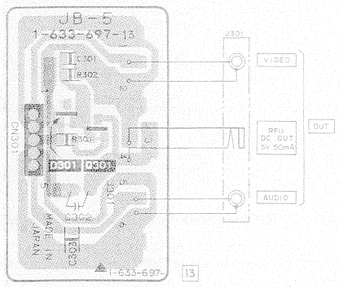

* 1-633-697-11 JB-5 BOARD
****

〈 DIODE 〉

D301 8-719-800-76 DIODE 1SS226

〈 TRANSISTOR 〉

Q301 8-729-216-22 TRANSISTOR 2SA1162

— Ref. No. IF-20 BOARD: 8000 series —

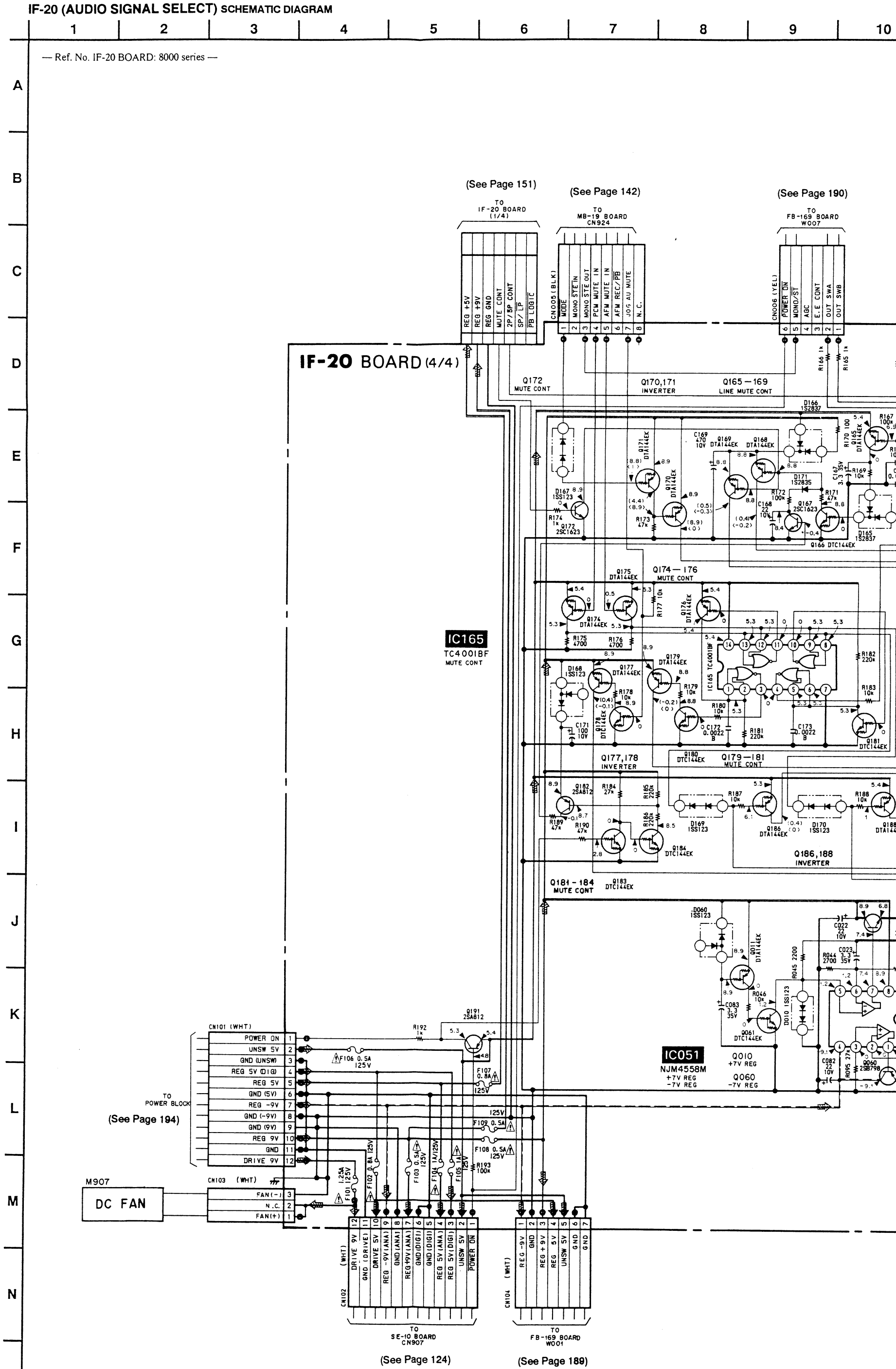

9 10 11 12 13 14 15 16 17 18 19

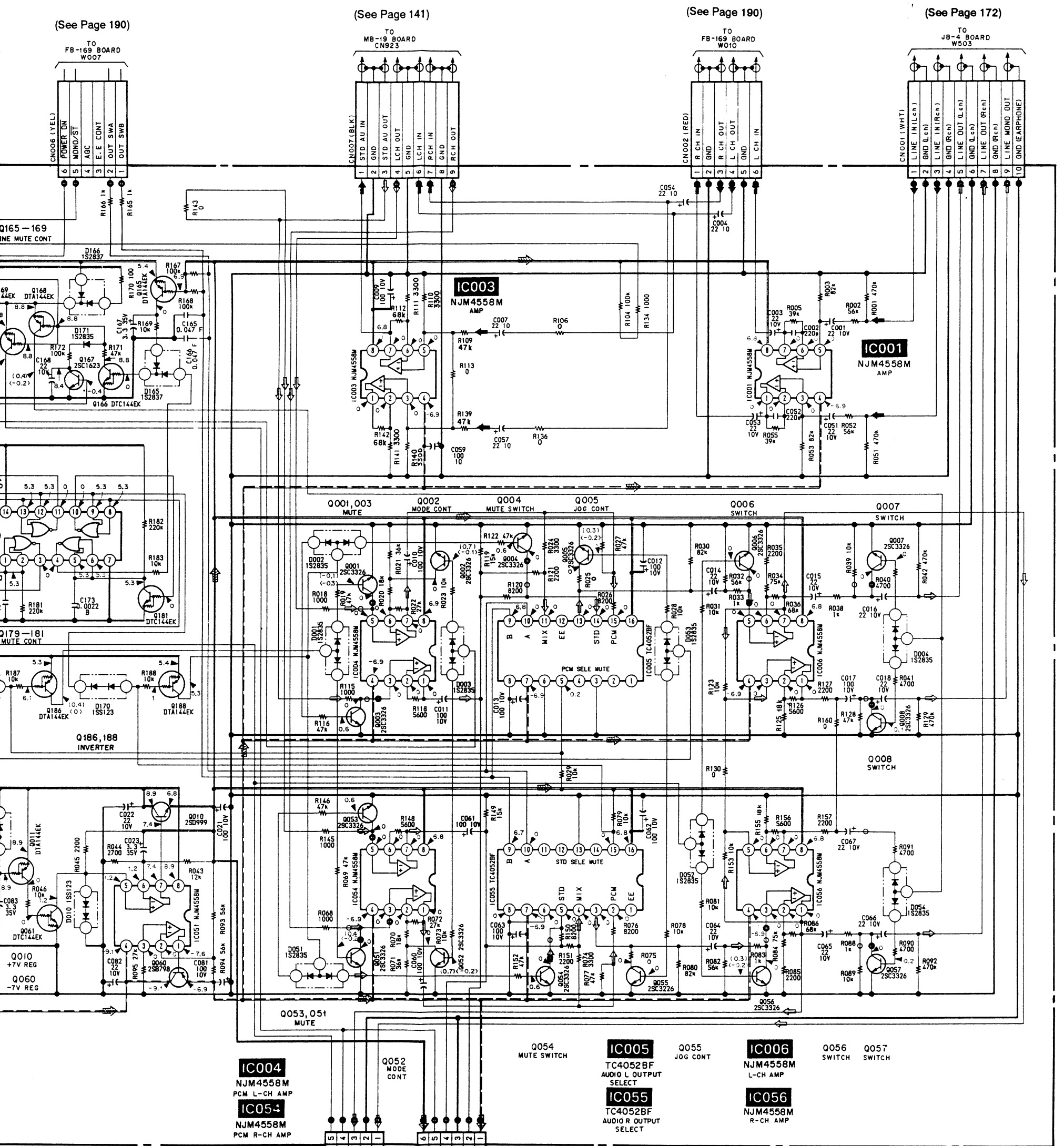

- **SIGNAL PATH**

	VIDEO SIGNAL			AUDIO SIGNAL
	CHROMA	Y	Y/CHROMA/DATA	
REC				➡
PB				⇨

FB-169 (FUNCTION CONTROL, FUNCTION SWITCH), TC-20 (LED INDICATER), MJ-25 (MIC IN), HE-2 (HEADPHONE OUT) PRINTED WIRING BOARDS

— Ref. No. HE-2 BOARD: 6000 series, FB-169, MJ-25, TC-20 BOARD: 9000 series —

* A-7062-654-A FB-169 (P) BOARD, COMPLETE
****

〈 DIODE 〉

D001 8-719-800-76 DIODE 1SS226
D009 8-719-945-82 DIODE GL5HS42 (STANDBY)
D010 8-719-920-05 DIODE TLG123A (POWER)
D011 8-719-907-92 DIODE GL5EG41 (PCM)
D012 8-719-941-46 DIODE GL5HY41 (SP)

D013 8-719-941-46 DIODE GL5HY41 (⏏)
D014 8-719-918-96 DIODE TL0123 (⏸)
D015 8-719-812-32 DIODE TLY123 (⏩)
D016 8-719-920-05 DIODE TLG123A (▶)
D017 8-719-812-32 DIODE TLY123 (⏪)

D018 8-719-939-36 DIODE GL5HY42 (▲)
D019 8-719-812-31 DIODE TLR123 (●)
D020 8-719-913-59 DIODE LT-9230N (Hi8)
D024 8-719-906-58 DIODE GL5HD41 (TIMER REC)
D025 8-719-812-31 DIODE TLR123 (AUDIO DUB)

D026 8-719-812-31 DIODE TLR123 (TC DUB)
D101 8-719-104-34 DIODE 1S2836
D102 8-719-104-34 DIODE 1S2836
D103 1-520-503-11 METER UNIT, LED LEVEL
D155 8-719-104-34 DIODE 1S2836

D156 8-719-104-34 DIODE 1S2836
D157 8-719-400-18 DIODE MA152WK
D158 8-719-104-34 DIODE 1S2836

〈 IC 〉

IC001 8-752-830-17 IC CXP5046H-262Q
IC002 8-759-937-56 IC S-8054ALB-LM-S
IC003 8-741-100-48 IC SBX1610-59
IC004 8-759-927-46 IC SN74HC00ANS
IC101 8-759-981-XX IC NJM4560M

IC102 8-759-300-71 IC TC4053BFHB
IC152 8-759-981-92 IC NJM4558M
IC153 8-759-981-92 IC NJM4558M
IC154 8-759-700-62 IC NJM4562M

〈 TRANSISTOR 〉

Q012 8-729-901-06 TRANSISTOR DTA144EK
Q013 8-729-140-88 TRANSISTOR FP1A3M
Q015 8-729-216-22 TRANSISTOR 2SA1162
Q016 8-729-900-53 TRANSISTOR DTC114EK
Q017 8-729-901-06 TRANSISTOR DTA144EK

Q018 8-729-901-06 TRANSISTOR DTA144EK
Q019 8-729-901-01 TRANSISTOR DTC144EK
Q101 8-729-901-01 TRANSISTOR DTC144EK
Q103 8-729-216-22 TRANSISTOR 2SA1162
Q104 8-729-100-66 TRANSISTOR 2SC1623

Q105 8-729-202-38 TRANSISTOR 2SC3326N
Q106 8-729-202-38 TRANSISTOR 2SC3326N
Q153 8-729-202-38 TRANSISTOR 2SC3326N
Q154 8-729-202-38 TRANSISTOR 2SC3326N
Q155 8-729-202-38 TRANSISTOR 2SC3326N

Q156 8-729-100-66 TRANSISTOR 2SC1623
Q157 8-729-901-06 TRANSISTOR DTA144EK
Q158 8-729-901-06 TRANSISTOR DTA144EK
Q159 8-729-901-01 TRANSISTOR DTC144EK
Q160 8-729-140-75 TRANSISTOR 2SD999-CLCK

Q161 8-729-101-07 TRANSISTOR 2SB798-DLDK
Q162 8-729-202-38 TRANSISTOR 2SC3326N

FB-169 BOARD (COMPONENT SIDE)

D001 I-2
D008 G-3
D009 A-2
D010 A-1
D011 F-1
D012 F-1
D013 F-1
D014 K-2
D015 J-3
D016 I-2
D017 H-2
D018 B-2
D019 K-2
D020 G-2
D024 K-1
D025 J-3
D026 H-3
D101 B-3
D102 C-2
D151 D-3
D153 D-3
D154 D-2

IC001 I-2
IC003 I-1

Q101 B-3
Q105 B-2
Q106 B-2
Q151 D-3
Q154 F-2
Q156 I-3
Q160 G-3
Q161 G-3

FB-169 BOARD (COMPONENT SIDE)

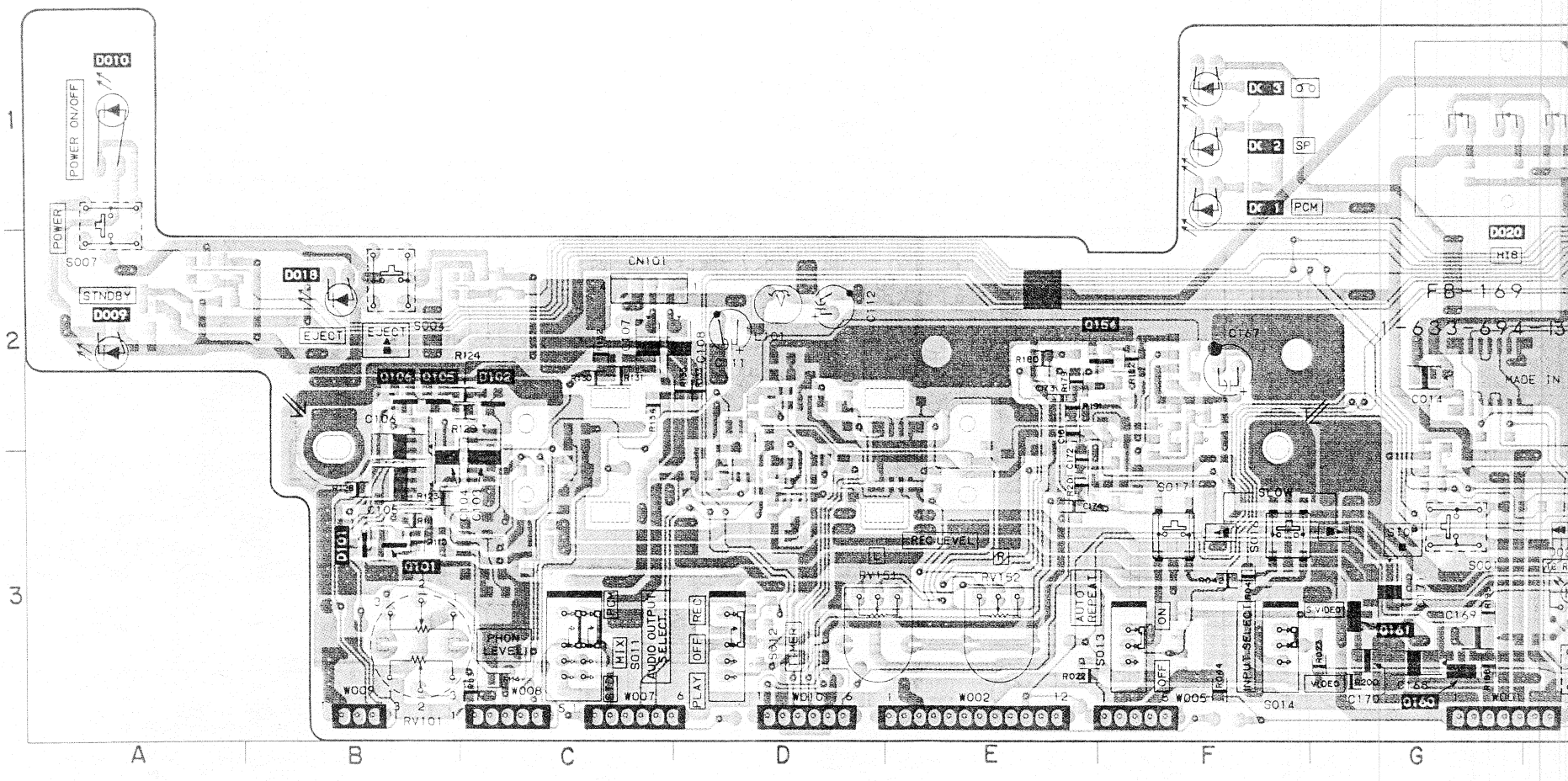

FB-169 BOARD (CONDUCTOR SIDE)

D002 G-2
D003 C-2
D004 A-2
D005 D-3
D006 D-3
D007 F-3
D021 J-2
D023 J-3
D152 D-2
D155 E-2
D156 F-2
D157 F-2
D158 E-3

IC002 I-2
IC004 G-2
IC101 B-3
IC102 B-2
IC152 E-2
IC153 E-2
IC154 I-3

Q012 A-2
Q013 H-1
Q015 K-1
Q016 K-3
Q017 K-3
Q018 K-3
Q019 K-3
Q103 C-3
Q104 C-3
Q152 D-3
Q153 F-3
Q155 F-2
Q157 F-2
Q158 F-2
Q159 F-3
Q162 F-3

FB-169 BOARD (CONDUCTOR SIDE)

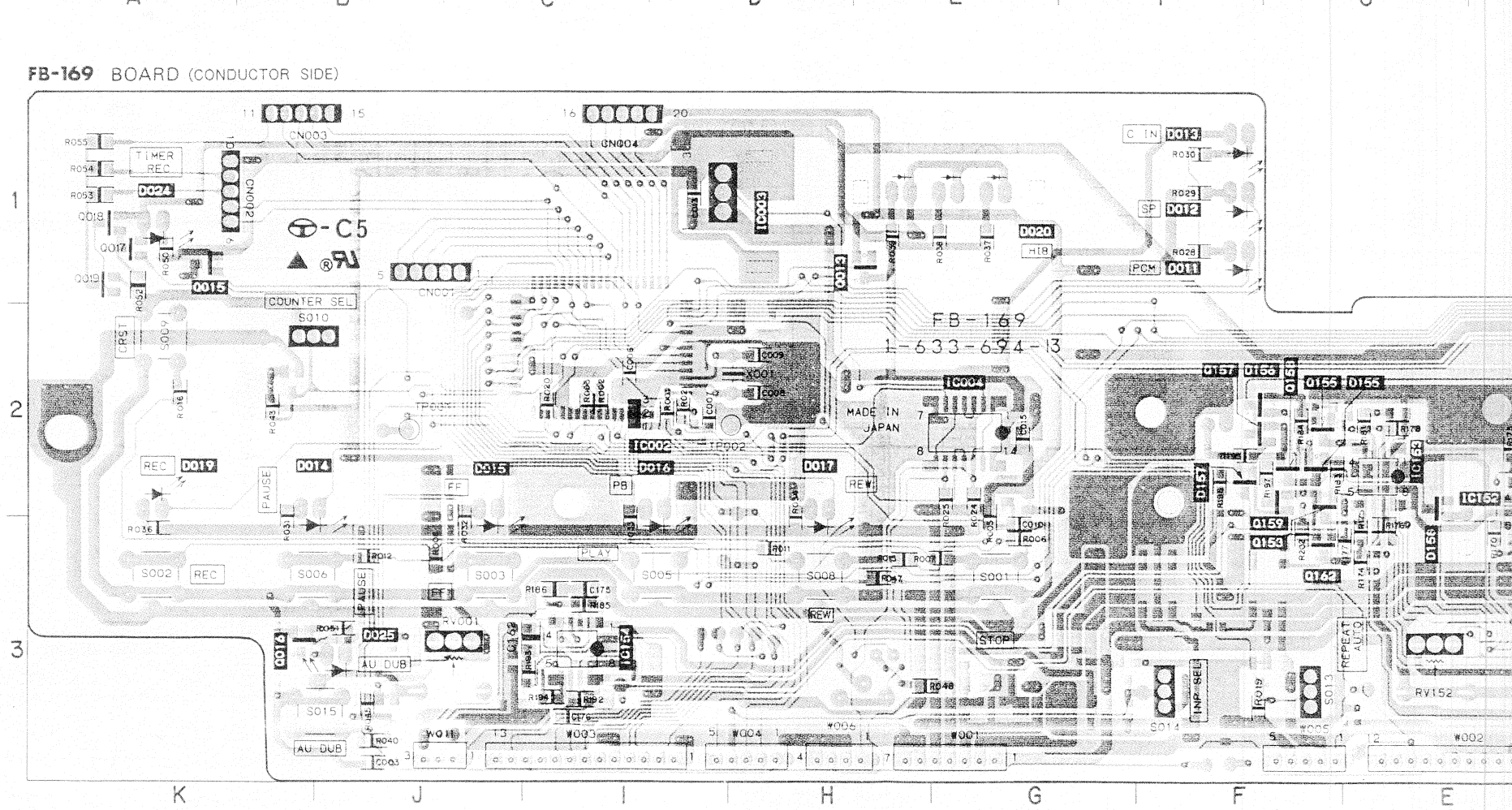

* 1-633-699-11 TC-20 BOARD
****

〈 TRANSISTOR 〉

Q701	8-729-140-88	TRANSISTOR FP1A3M
Q702	8-729-140-88	TRANSISTOR FP1A3M
Q703	8-729-140-88	TRANSISTOR FP1A3M
Q704	8-729-140-88	TRANSISTOR FP1A3M
Q705	8-729-140-88	TRANSISTOR FP1A3M
Q706	8-729-140-88	TRANSISTOR FP1A3M
Q707	8-729-140-88	TRANSISTOR FP1A3M
Q708	8-729-140-88	TRANSISTOR FP1A3M
Q709	8-729-900-53	TRANSISTOR DTC114EK
Q710	8-729-900-53	TRANSISTOR DTC114EK
Q711	8-729-900-53	TRANSISTOR DTC114EK
Q712	8-729-900-53	TRANSISTOR DTC114EK
Q713	8-729-900-53	TRANSISTOR DTC114EK
Q714	8-729-900-53	TRANSISTOR DTC114EK
Q715	8-729-900-53	TRANSISTOR DTC114EK

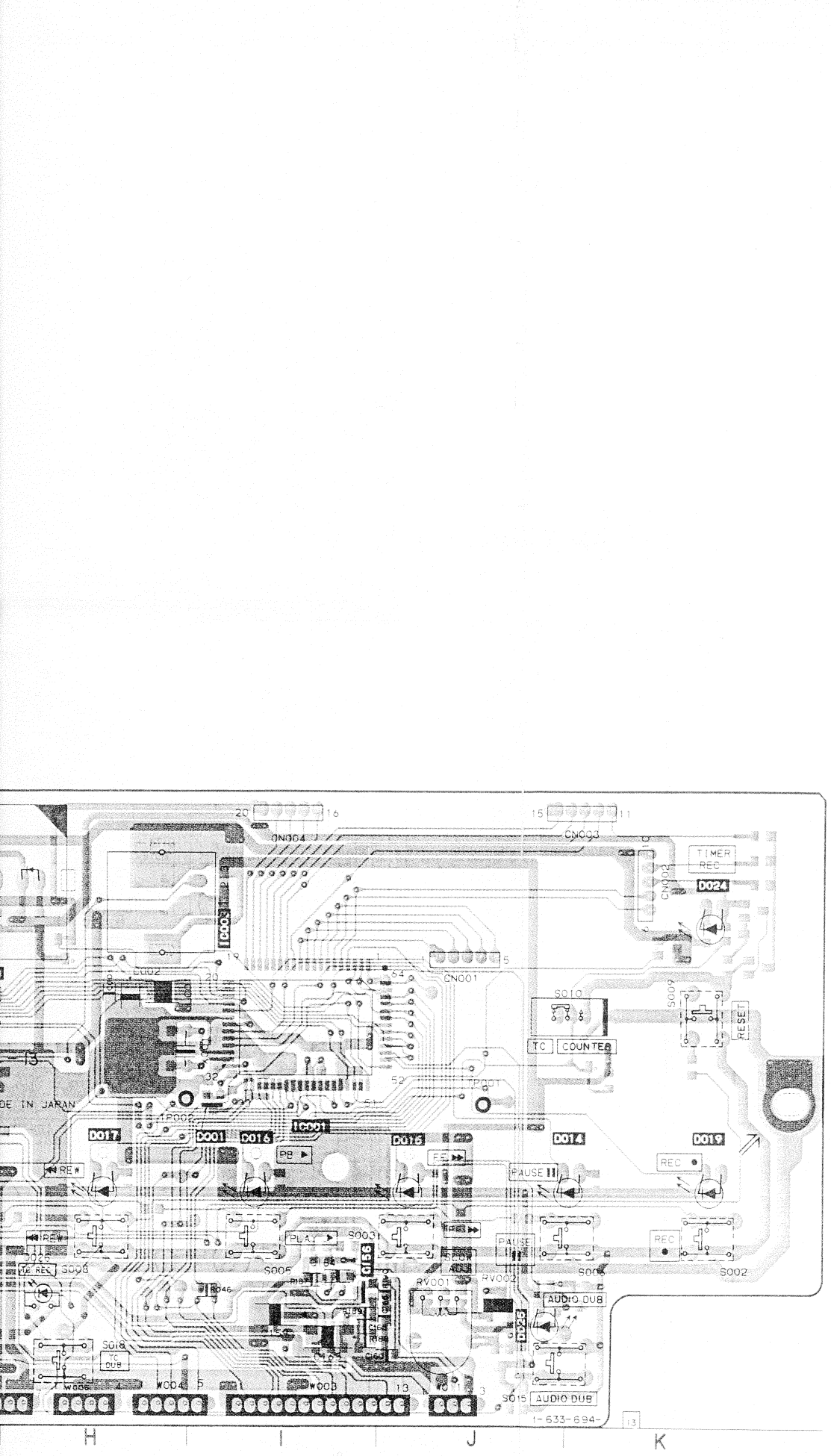

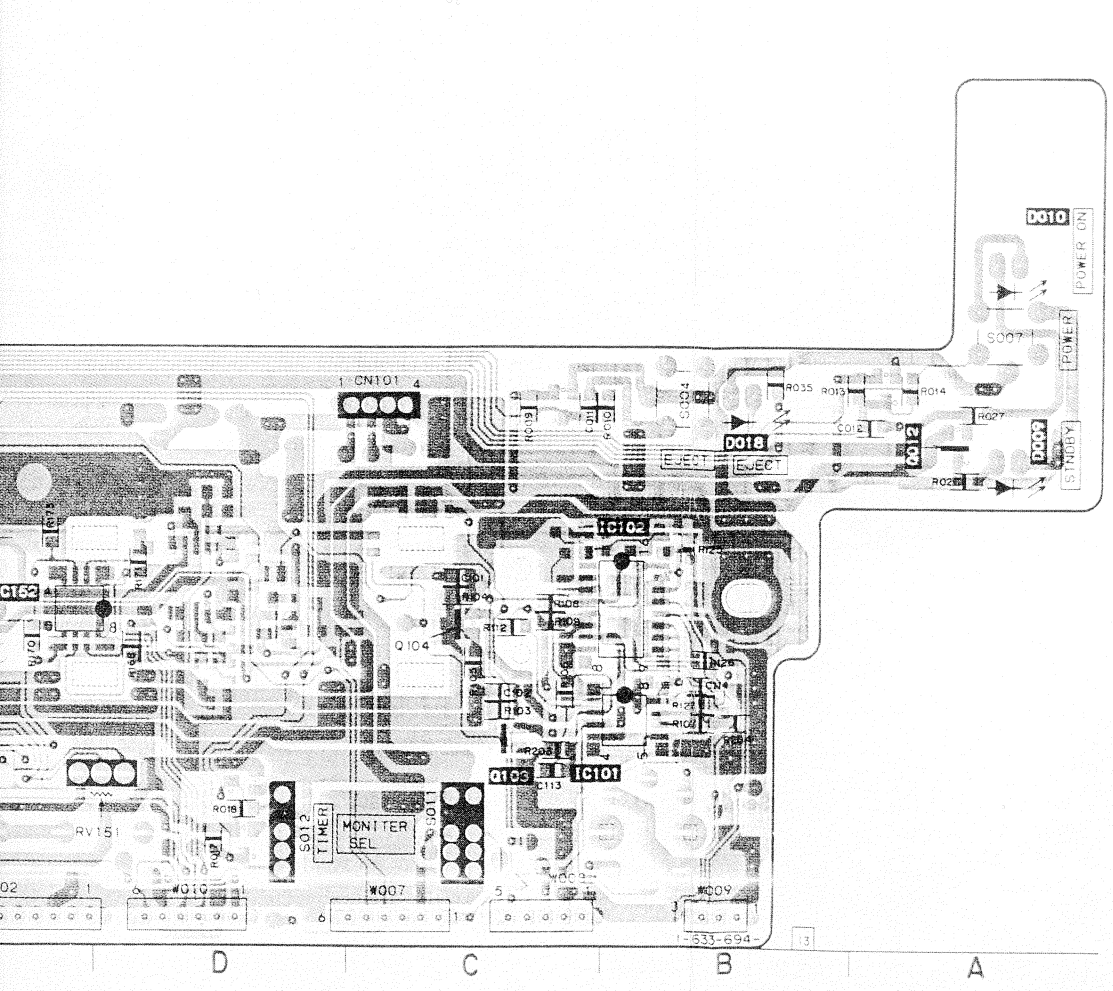

TC-20 BOARD (COMPONENT SIDE)

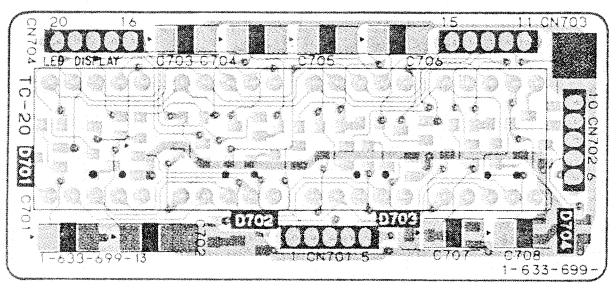

TC-20 BOARD (CONDUCTOR SIDE)

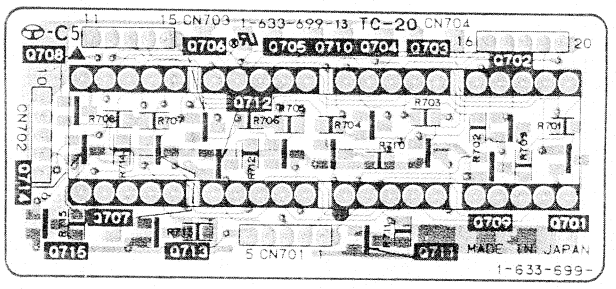

HE-2 BOARD(COMPONENT SIDE)

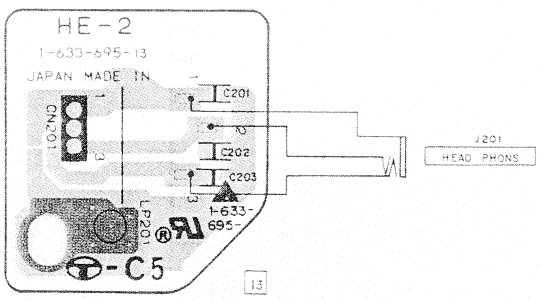

* 1-633-698-11 MJ-25 BOARD
****

〈 DIODE 〉

D601	8-719-106-80	DIODE RD13M-B1

MJ-25 BOARD(CONDUCTOR SIDE)

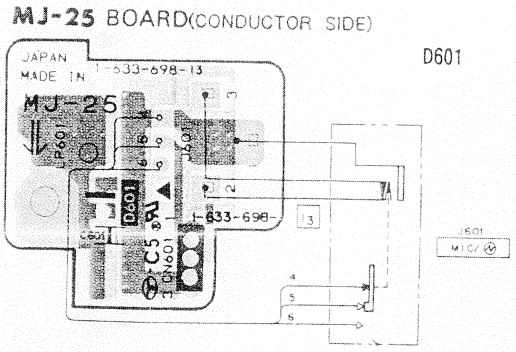

FUNCTION CONTROL FUNCTION CONTROL

— Ref. No. HE-2 BOARD: 6000 series, FB-169, MJ-25, TC-20 BOARD: 9000 series —

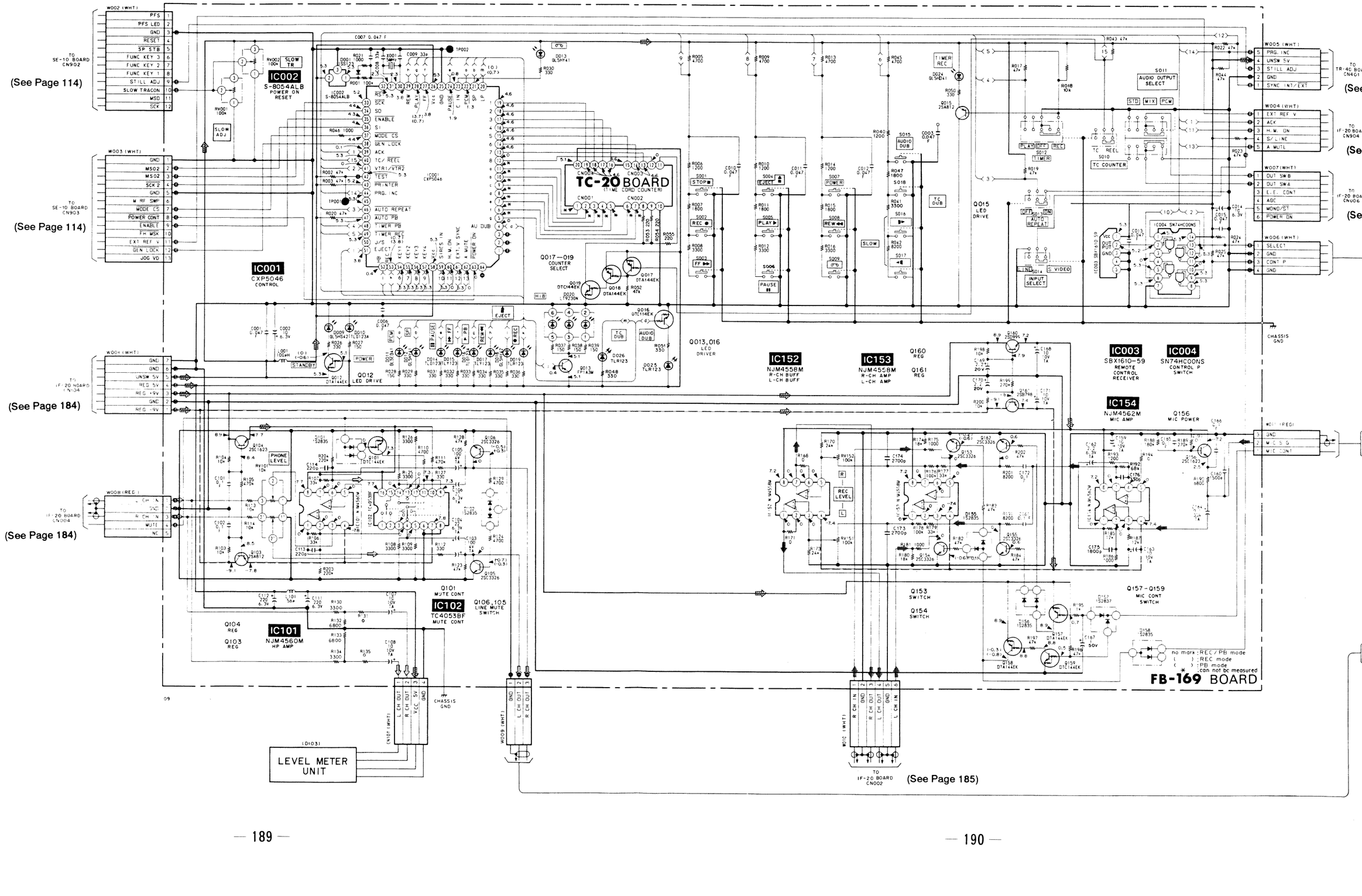

E-2 (HEADPHONE OUT) SCHEMATIC DIAGRAMS

7 | 8 | 9 | 10 | 11 | 12 | 13 | 14 | 15 | 16 | 17 | 18 | 19 | 20 | 21 | 22

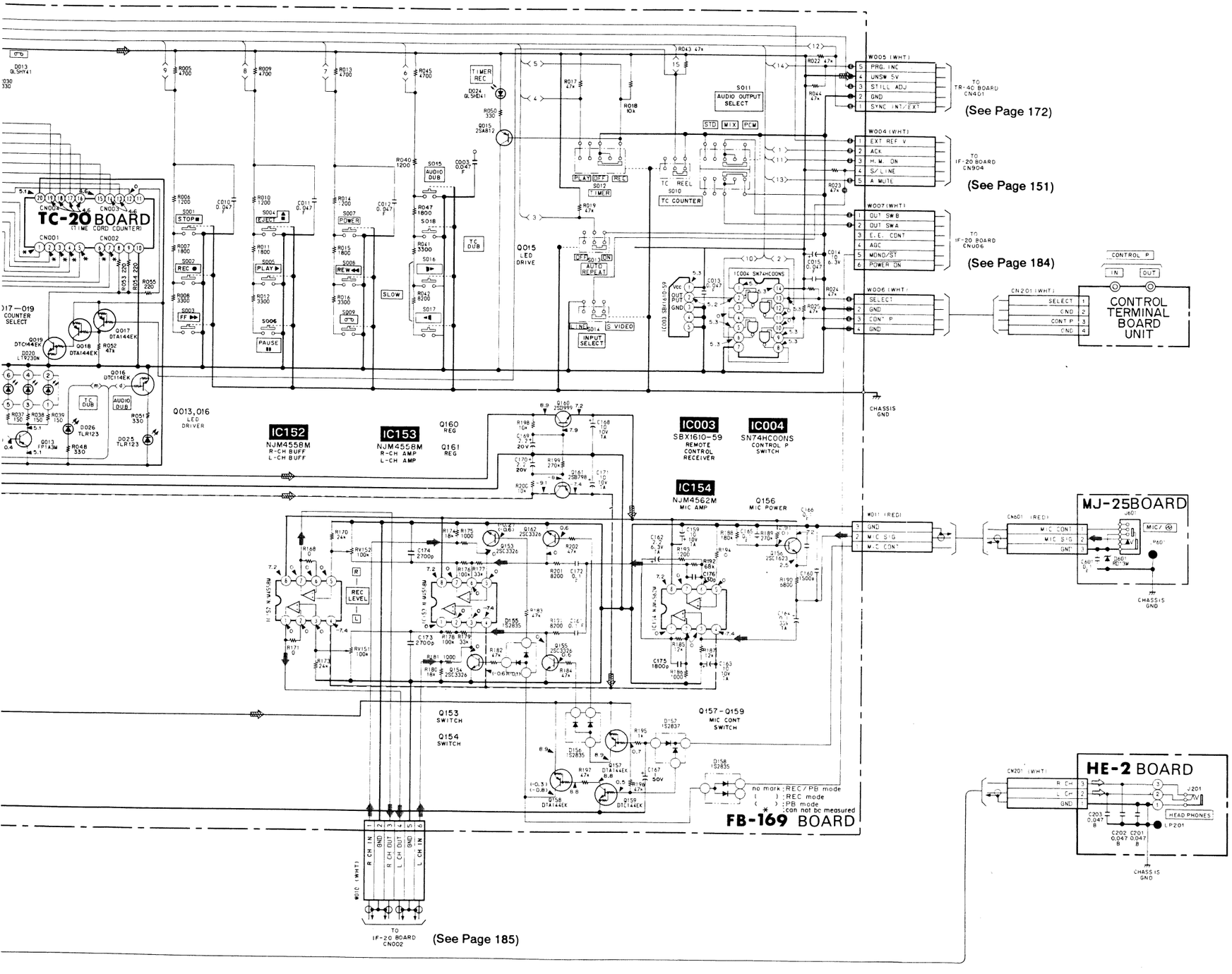

(See Page 190)

(See Page 189)

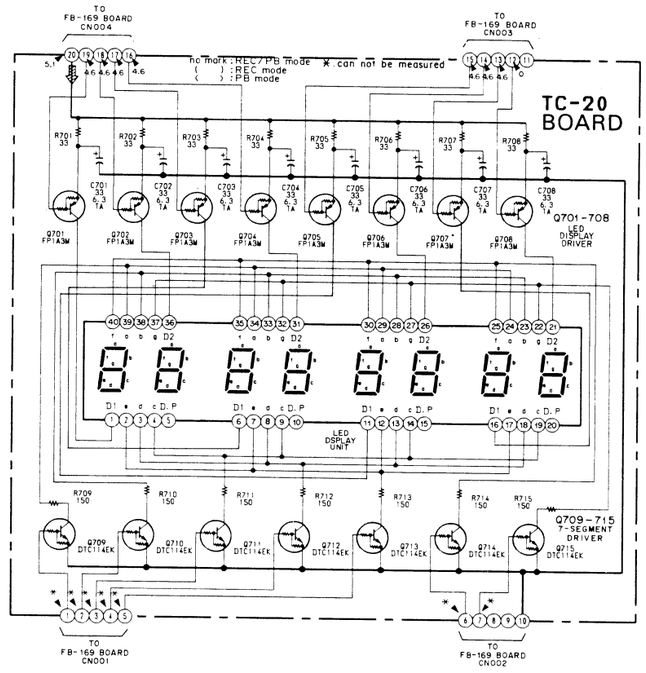

(See Page 189)

(See Page 189)

- **SIGNAL PATH**

	VIDEO SIGNAL			AUDIO SIGNAL
	CHROMA	Y	Y/CHROMA/DATA	
REC				➡
PB				⇨

POWER BLOCK SCHEMATIC DIAGRAM

— Ref. No. POWER BLOCK: 10000 series —

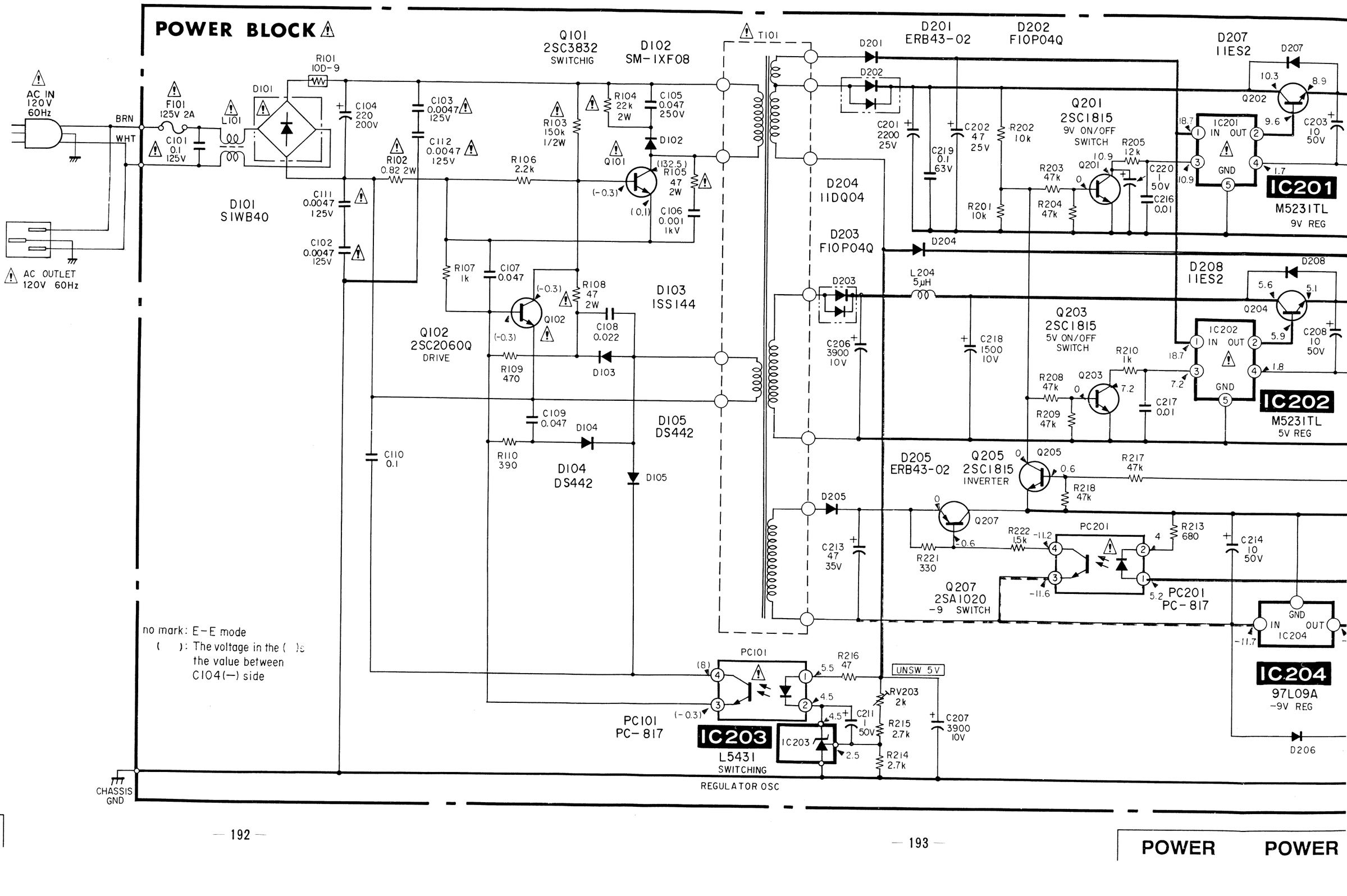

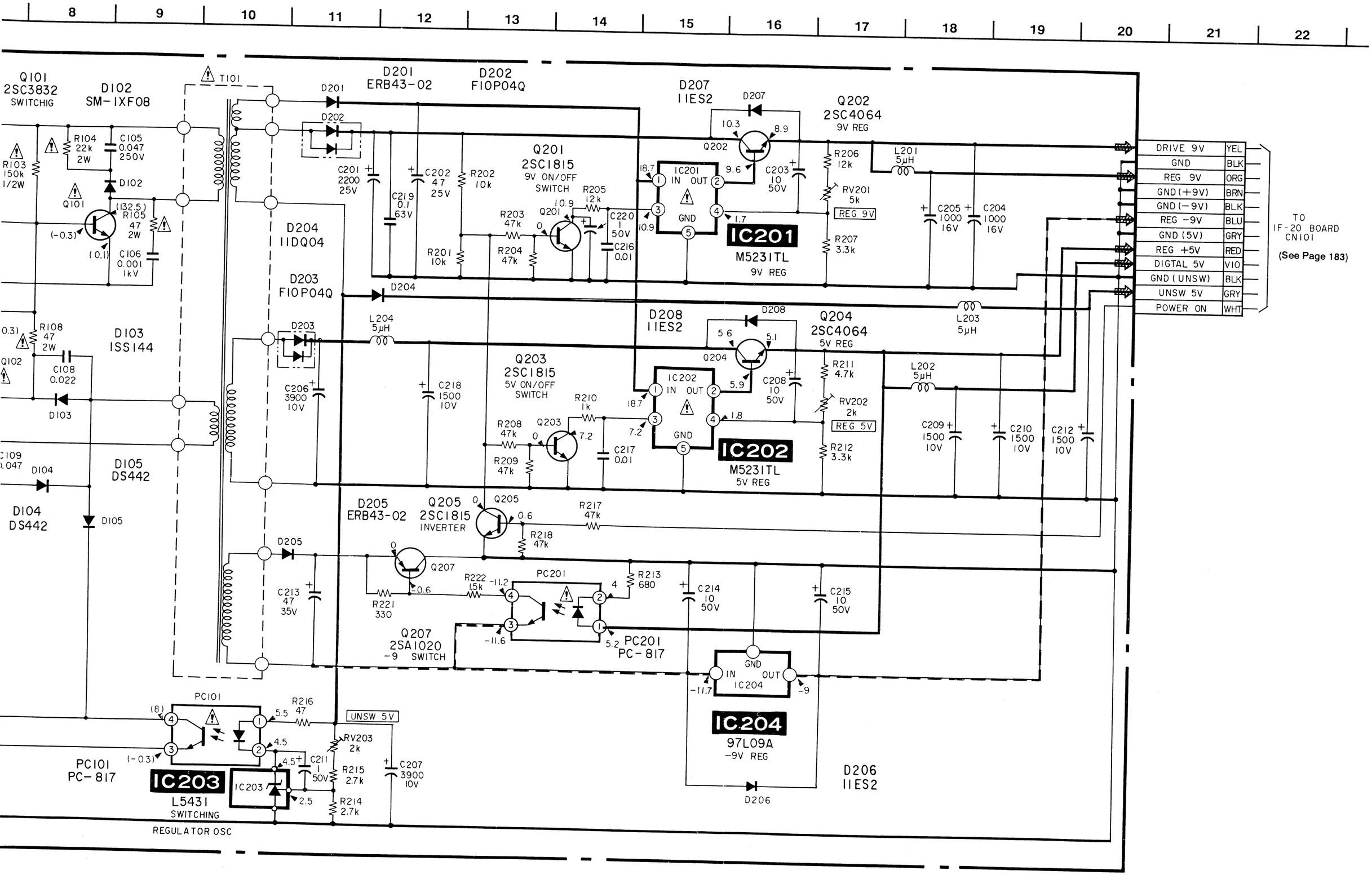

8
9
10
11
12
13
14
15
16
17
18
19
20
21
22
Q101
2SC3832
SWITCHIG
D102
SM-1XF08
T101
D201
ERB43-02
D202
F10P04Q
D207
11ES2
Q202
2SC4064
9V REG
Q201
2SC1815
9V ON/OFF
SWITCH
IC201
M5231TL
9V REG
D204
11DQ04
D203
F10P04Q
D208
11ES2
Q204
2SC4064
5V REG
Q203
2SC1815
5V ON/OFF
SWITCH
IC202
M5231TL
5V REG
D103
1SS144
D105
DS442
D104
DS442
D205
ERB43-02
Q205
2SC1815
INVERTER
Q207
2SA1020
-9 SWITCH
PC201
PC-817
IC204
97L09A
-9V REG
D206
11ES2
PC101
PC-817
IC203
L5431
SWITCHING
REGULATOR OSC
UNSW 5V
DRIVE 9V YEL
GND BLK
REG 9V ORG
GND (+9V) BRN
GND (-9V) BLK
REG -9V BLU
GND (5V) GRY
REG +5V RED
DIGTAL 5V VIO
GND (UNSW) BLK
UNSW 5V GRY
POWER ON WHT
TO
IF-20 BOARD
CN101
(See Page 183)

POWER POWER

POWER BLOCK PRINTED WIRING BOARD

— Ref. No. POWER BLOCK: 10000 series —

1-413-519-11 POWER BLOCK
****

〈 DIODE 〉

D101	8-719-500-04	DIODE S1WB40
D102	9-993-709-01	DIODE SM-1FX08
D103	9-993-710-01	DIODE 1SS144
D104	9-993-711-01	DIODE DS442
D105	9-993-711-01	DIODE DS442
D201	8-719-907-40	DIODE ERB43-02
D202	9-993-712-01	DIODE F10P04Q
D203	9-993-712-01	DIODE F10P04Q
D204	8-719-200-29	DIODE 11DQ04
D205	8-719-907-40	DIODE ERB43-02
D206	8-719-200-82	DIODE 11ES2
D207	8-719-200-82	DIODE 11ES2
D208	8-719-200-82	DIODE 11ES2

〈 IC 〉

IC201	8-759-605-43	IC M5231TL
IC202	8-759-605-43	IC M5231TL
IC203	9-993-714-01	IC L5431
IC204	9-993-707-01	IC 97L09A

〈 TRANSISTOR 〉

Q101	8-729-303-04	TRANSISTOR 2SC3832
Q102	8-729-906-02	TRANSISTOR 2SC2060Q
Q201	8-729-281-53	TRANSISTOR 2SC1815
Q202	9-993-708-01	TRANSISTOR 2SC4064
Q203	8-729-281-53	TRANSISTOR 2SC1815
Q204	9-993-708-01	TRANSISTOR 2SC4064
Q205	8-729-281-53	TRANSISTOR 2SC1815
Q207	8-729-202-45	TRANSISTOR 2SA1020

POWER BLOCK (CONDUCTOR SIDE)

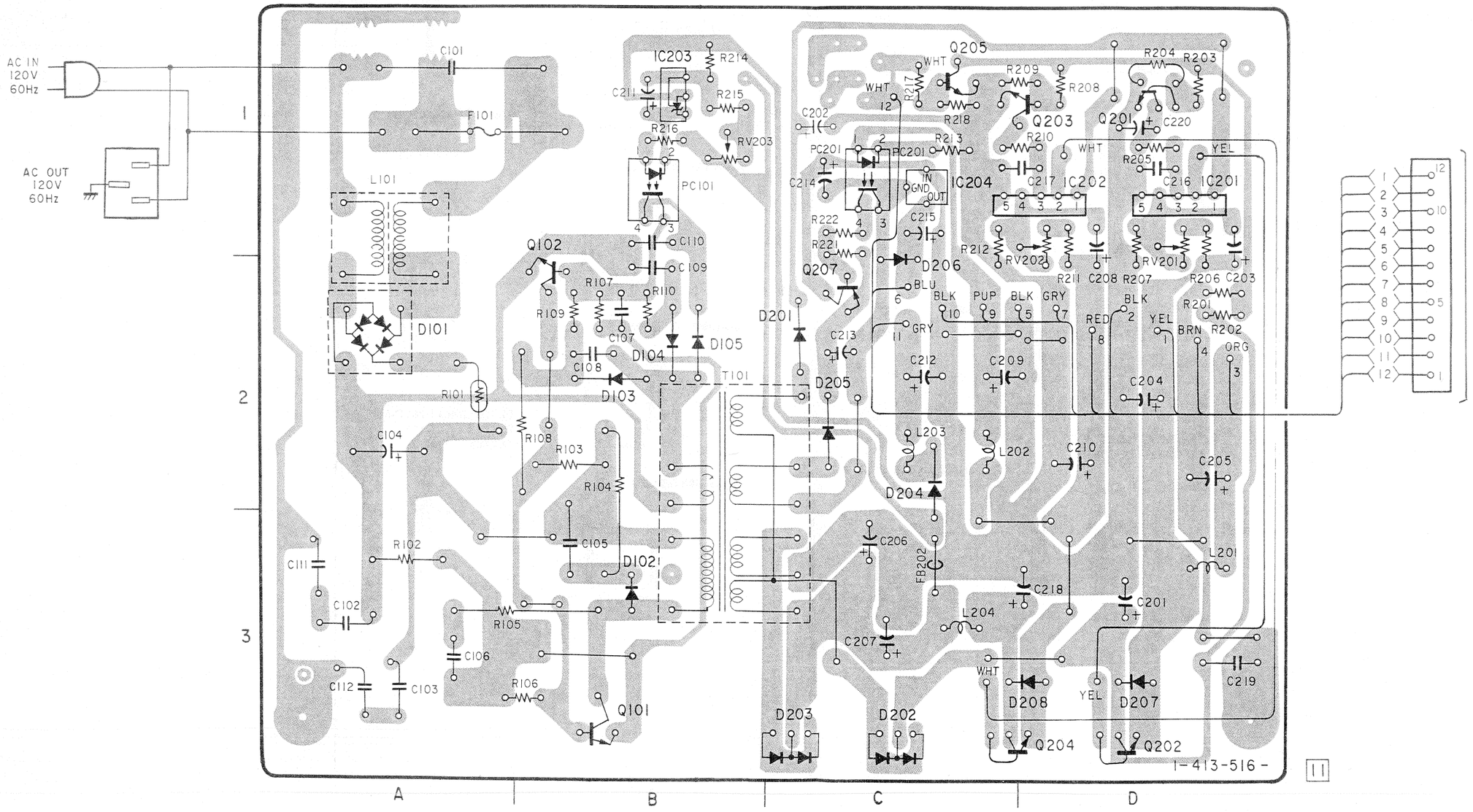

4-3. SEMICONDUCTORS

AN607P
AN608P

BA401
TA7060AP

BA7036LS

CF77305FT
CXP5024H
CXP5048H-204Q
CXP5048H-205Q
CXP5048H-210Q
μPD75106G-573-1B
μPD75106G-589-1B

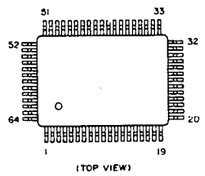

CF77309FR

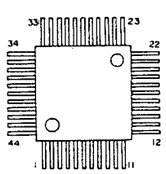

CXA1047M
LB1616M

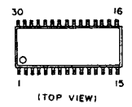

CXA1109M
TA8607F

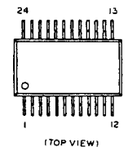

CXP80116-638Q

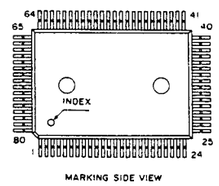

MC14069UBF
MC1496MR
RC3403AM

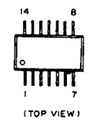

NJM2234M
NJM2238M
NJM2246M
RC3414M

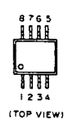

SBX1595-01

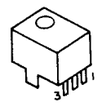

TA7745F

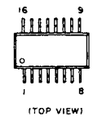

TL431CLP

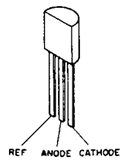

2SA1175-HFE

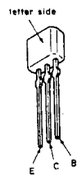

2SA1385-ZL
2SC3518

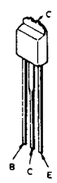

2SC3327-B
DTA144ES

FMG2

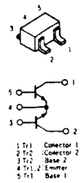

IMX1

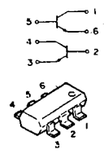

IMZ1

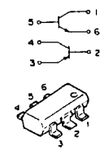

NJL7141E

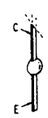

1SS119
RD5.1ESB2
RD5.1ESB3

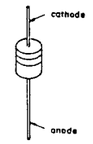

GP2S09-B

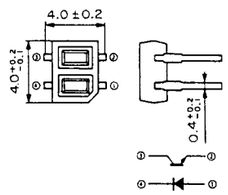

AA3422S

GL-450S

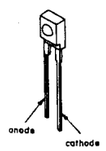

GL-5EG521-B

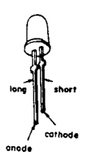

GL-5HD21
GL-5HY41

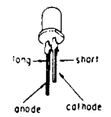

GL-5HS42
GL-5HY42

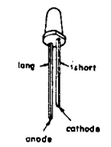

LB-202DB

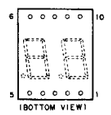

LT-9230D

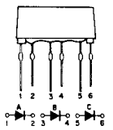

SLP281C-50
TLR123
TLY123

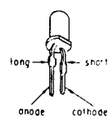

SECTION 5
EXPLODED VIEWS

NOTE:
- -XX, -X mean standardized parts, so they may have some difference from the original one.
- The construction parts of an assembled part are indicated with a collation number in the remark column.
- Items marked " * " are not stocked since they are seldom required for routine service. Some delay should be anticipated when ordering these items.
- The mechanical parts with no reference number in the exploded views are not supplied.
- Hardware (# mark) list is given in the last of this parts list.

The components identified by mark ⚠ or dotted line with mark ⚠ are critical for safety.
Replace only with part number specified.

Les composants identifiés par une marque ⚠ sont critiques pour la sécurité.
Ne les remplacer que par une pièce portant le numéro spécifé.

5-1. FRONT PANEL AND CABINET ASSEMBLIES

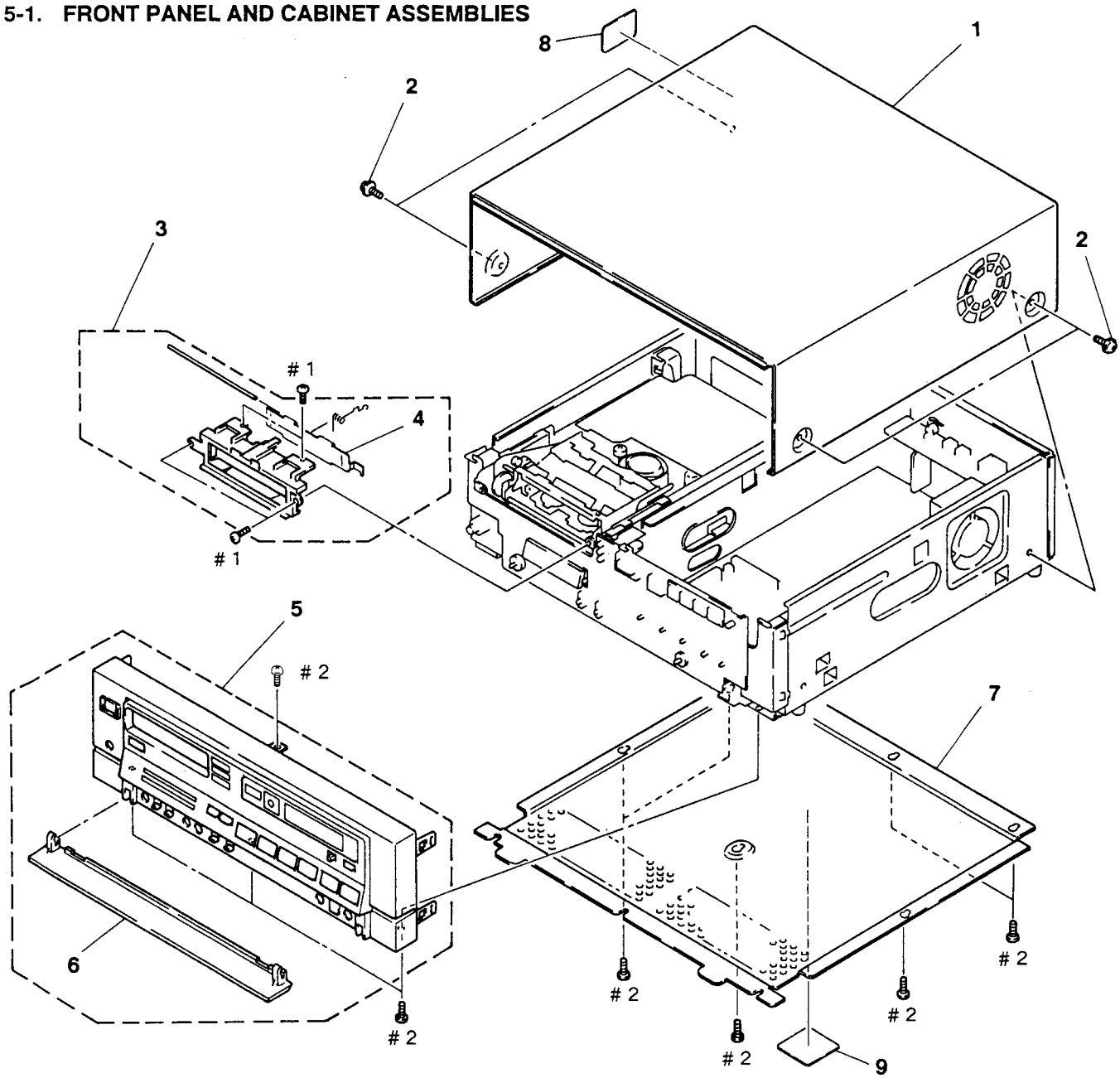

Ref. No.	Part No.	Description	Remark
1	*3-724-167-01	CASE, UPPER	
2	4-886-821-11	SCREW, M3 CASE	
3	*X-3738-905-1	WINDOW ASSY	
4	*3-721-101-71	DOOR	
5	X-3940-639-1	PANEL ASSY, FRONT	
6	X-3940-638-1	DOOR ASSY	
7	*3-724-168-01	PLATE, BOTTOM	
8	3-703-845-01	LABEL (N) (U/C), MAIN CAUTION	
9	3-703-848-01	LABEL (N), SUB CAUTION	

5-2. PC BOARDS AND POWER SUPPLY ASSEMBLIES

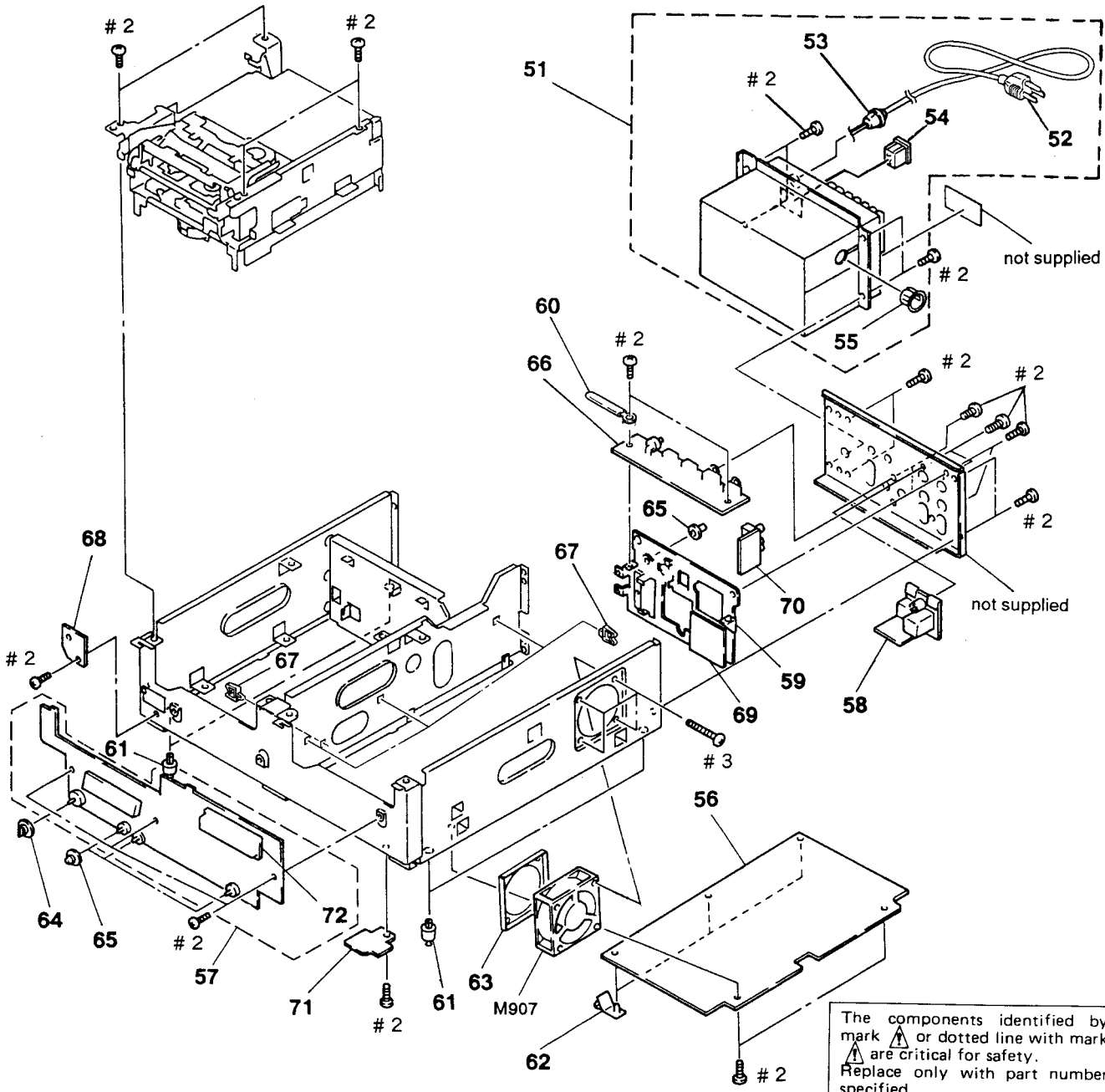

The components identified by mark ⚠ or dotted line with mark ⚠ are critical for safety.
Replace only with part number specified.

Les composants identifiés par une marque ⚠ sont critiques pour la sécurité.
Ne les remplacer que par une pièce portant le numéro spécifié.

Ref. No.	Part No.	Description	Remark
51	⚠ 1-413-519-11	POWER BLOCK	
52	⚠ A-534-517-81	CORD, POWER (10A 125V)	
53	⚠ 9-995-203-01	BUSHING, CORD	
54	⚠ 1-526-920-12	OUTLET, AC (15A 125V)	
55	9-993-728-01	BUSHING	
56	*A-7062-009-A	IF-20 BOARD, COMPLETE	
57	*A-7062-654-A	FB-169 (P) BOARD, COMPLETE	
58	*1-536-977-11	TERMINAL BOARD UNIT, CONTROL (CONTROL P)	
59	1-537-137-41	TERMINAL BOARD (J501 VIDEO IN, J502 VIDEO OUT, V503 AUDIO IN, J504 AUDIO OUT)	
60	*3-701-822-00	HOLDER, WIRE	
61	3-694-479-01	FOOT	

Ref. No.	Part No.	Description	Remark
62	*3-696-448-01	HINGE, SS	
63	*3-697-996-01	BRACKET, FAN	
64	3-724-112-01	KNOB, PHONE	
65	3-724-113-01	KNOB, ADJUST	
66	*1-633-700-11	TR-40 BOARD	
67	*4-314-320-00	HOLDER, WIRE	
68	*1-633-695-11	HE-2 BOARD	
69	*1-633-696-11	JB-4 BOARD	
70	*1-633-697-11	JB-5 BOARD	
71	*1-633-698-11	MJ-5 BOARD	
72	*1-633-699-11	TC-20 BOARD	
M907	1-541-360-21	MOTOR, DC BLUSHLESS FAN	

5-3. MECHANICAL DECK BOARDS ASSEMBLY

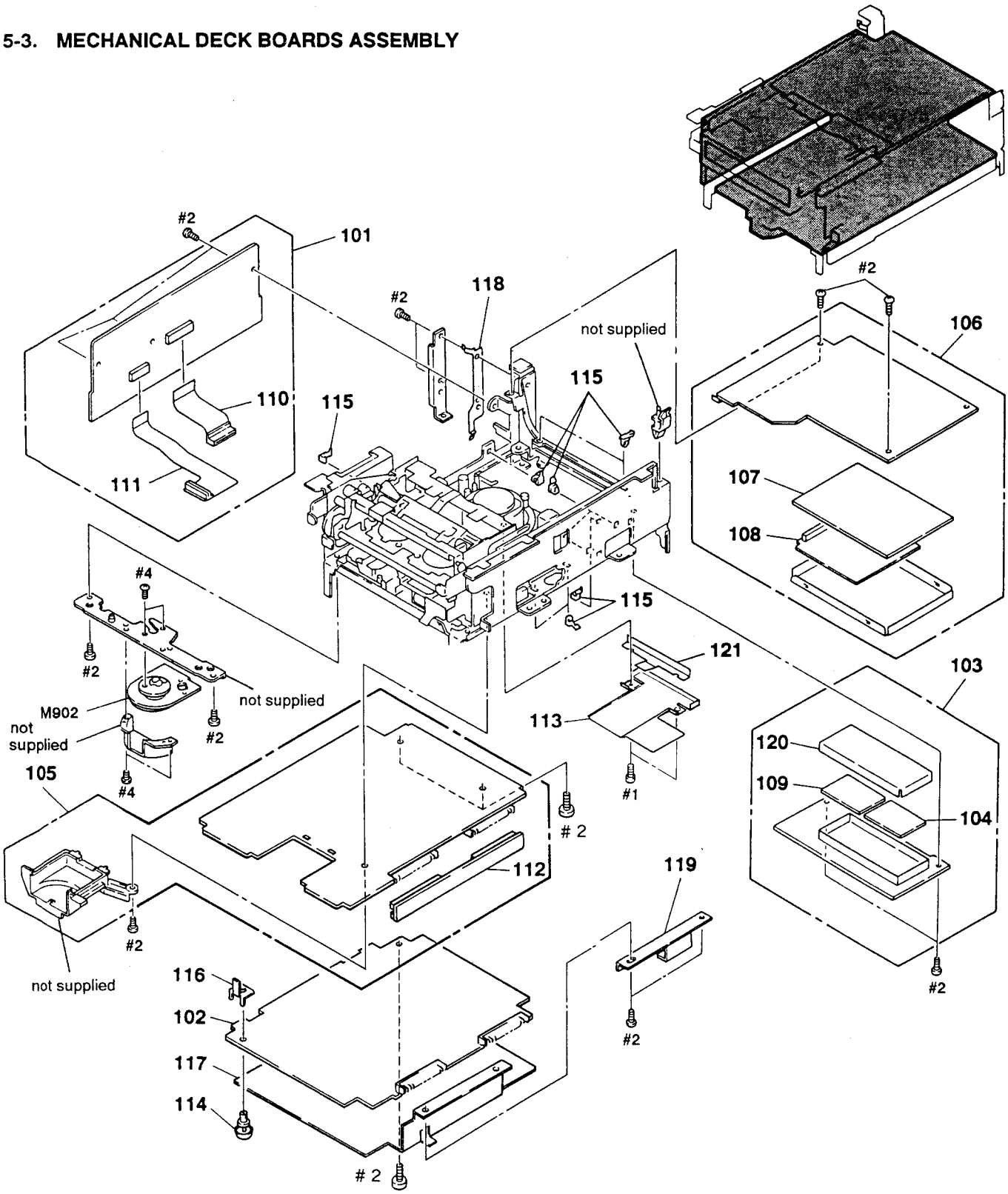

Ref. No.	Part No.	Description	Remark
101	*A-7061-819-A	MD-23 BOARD, COMPLETE	
102	*A-7061-820-A	HK-4 BOARD, COMPLETE	
103	*A-7061-821-A	FR-40 BOARD, COMPLETE	
104	*A-7061-822-A	RP-73 (SP) BOARD, COMPLETE	
105	*A-7061-823-A	SE-10 BOARD, COMPLETE	
106	*A-7062-565-A	MB-19 BOARD, COMPLETE	
107	*A-7062-566-A	PD-19 BOARD, COMPLETE	
108	*A-7061-826-A	PA-27 BOARD, COMPLETE	
109	*A-7061-827-A	RP-73 (LP) BOARD, COMPLETE	
110	*A-7070-624-A	FP-84 BOARD, COMPLETE	
111	*A-7070-625-A	FP-122 BOARD, COMPLETE	

Ref. No.	Part No.	Description	Remark
112	*A-7070-955-A	IG-4 BOARD, COMPLETE	
113	*X-3749-135-1	COVER BLOCK ASSY, FLEXIBLE	
114	3-531-576-01	RIVET	
115	*3-671-150-11	CLAMP	
116	*3-724-107-01	RETAINER, PC BOARD	
117	*3-940-849-01	PLATE, SHIELD, CORE	
118	*3-724-199-01	PLATE, SUPPORT, MB	
119	*3-738-954-01	STOPPER, HK	
120	*3-739-102-01	LID (H), UPPER, FR SHIELD CASE	
121	3-724-106-01	PLATE, GUARD, FLEXIBLE	
M902	8-835-304-11	MOTOR, DC U-11B (REEL)	

5-4. CASSETTE COMPARTMENT ASSEMBLY (1)

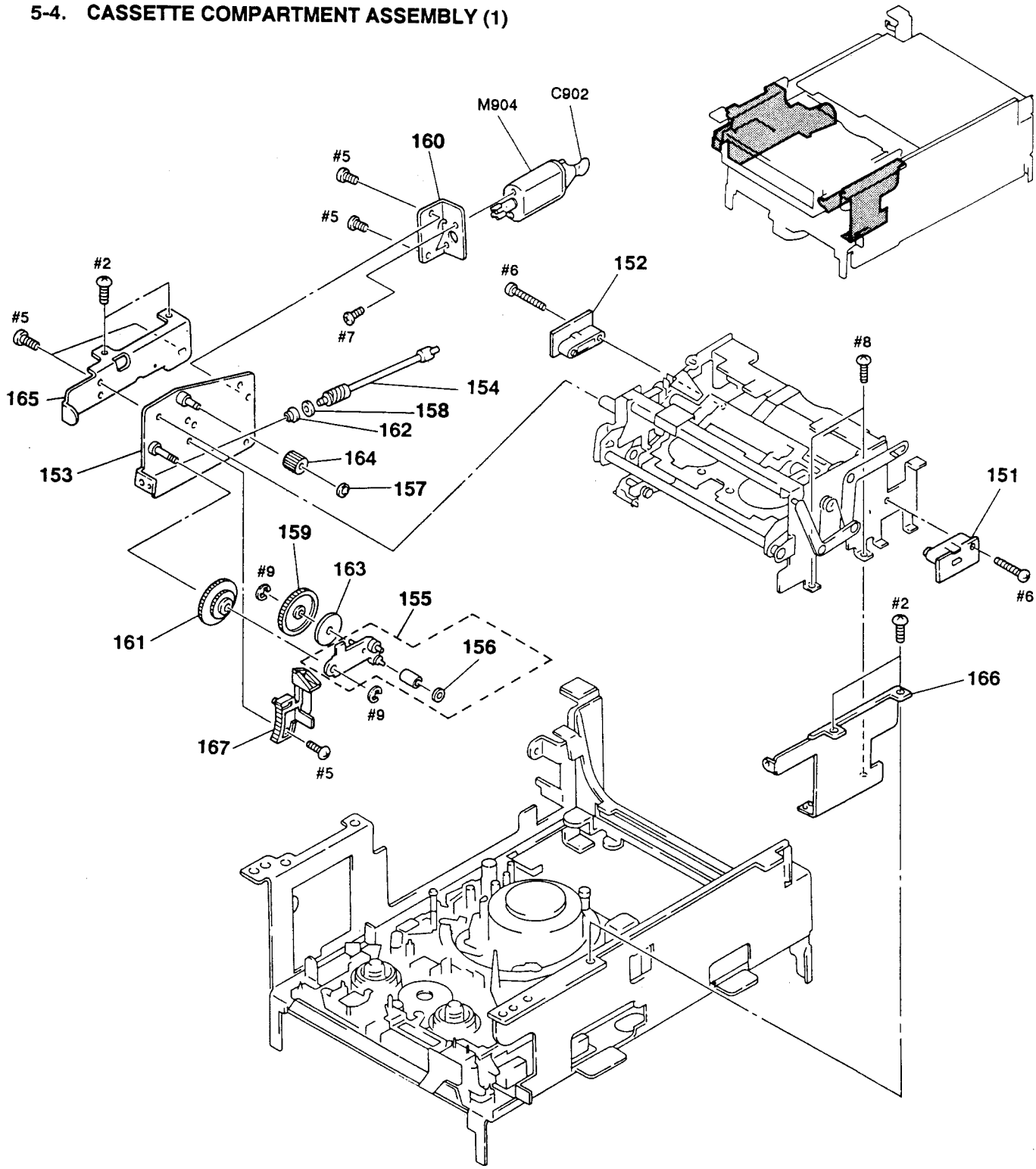

Ref. No.	Part No.	Description	Remark
151	*A-7070-627-A	TS-74 (RIGHT) BOARD, COMPLETE	
152	*A-7070-628-A	TS-74 (LEFT) BOARD, COMPLETE	
153	*X-3711-934-1	PLATE SUB ASSY, BLOCK	
154	X-3711-935-3	SHAFT ASSY, WORM	
155	X-3714-193-1	LEVER ASSY (B), GEAR	
156	3-315-414-31	WASHER	
157	3-669-465-00	WASHER (1.5), STOPPER	
158	3-701-437-11	WASHER	
159	3-713-430-01	GEAR (B)	
160	*3-713-431-01	BRACKET, MOTOR	
161	3-713-433-01	GEAR (A)	
162	3-713-439-01	BEARING	
163	*3-713-441-01	SPRING, LEAF	
164	3-713-452-01	GEAR (C)	
165	*3-724-140-01	BRACKET (LEFT)	
166	*3-724-141-01	BRACKET (RIGHT)	
167	3-724-913-02	RACK	
C902	1-161-057-00	CERAMIC 0.033uF 1% 50V	
M904	X-3711-936-1	MOTOR ASSY, FL (CASSETTE LOADING)	

5-5. CASSETTE COMPARTMENT ASSEMBLY (2)

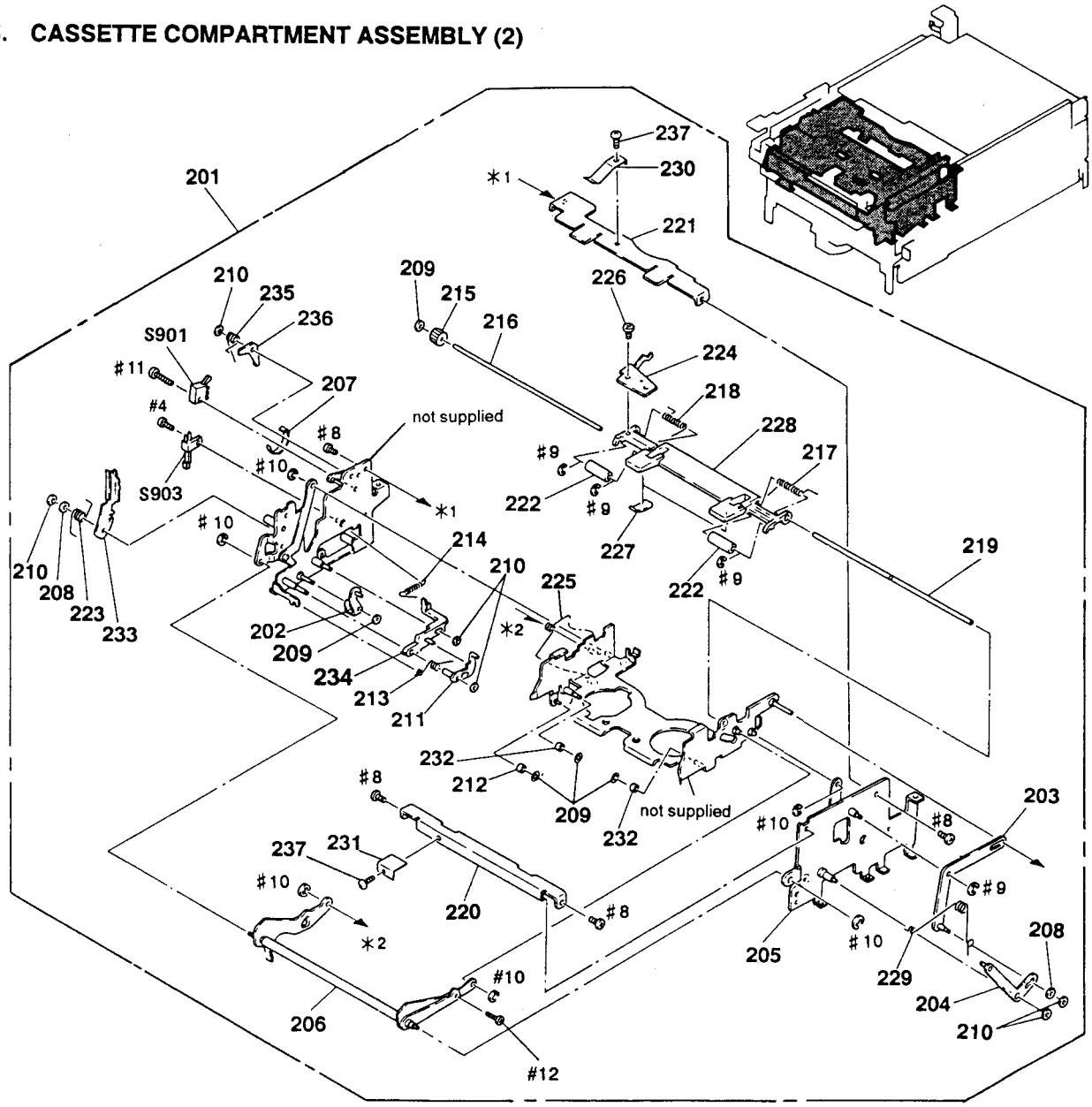

Ref. No.	Part No.	Description	Remark
201	A-7090-645-A	CASSETTE COMPARTMENT BLOCK ASSY	
202	*X-3686-541-1	CLAW ASSY, LOCK	
203	X-3711-930-1	LEVER ASSY, HOLDER	
204	X-3711-931-4	LEVER ASSY, DOOR	
205	*X-3711-932-1	PLATE (R) ASSY, SIDE	
206	*X-3711-937-1	JOINT ASSY	
207	*3-337-402-01	BAND, BINDING	
208	3-533-073-01	WASHER	
209	3-578-265-11	WASHER, STOPPER	
210	3-669-465-00	WASHER (1.5), STOPPER	
211	3-686-692-01	PREVENTION, SLIDER	
212	*3-686-693-01	ROLLER, LOCK	
213	3-686-694-01	SPRING, TORSION	
214	3-696-047-01	SPRING, TENSION	
215	3-713-429-01	GEAR (D)	
216	*3-713-440-01	SHAFT, ROLLER	
217	3-713-442-01	SPRING (RIGHT)	
218	3-713-445-01	SPRING (LEFT)	
219	*3-713-457-01	SHAFT, JOINT	
220	*3-713-458-01	REINFORCEMENT	
221	*3-713-462-03	STOPPER, HOLDER	
222	3-713-466-01	ROLLER	
223	3-713-488-01	SPRINT (2), TORSION	
224	3-724-912-01	PLATE, FUNCTION, LEVER	
225	3-713-620-01	SPRING (1), TORSION	
226	3-713-622-01	SCREW (M1.3X4), TAPPING, 0	
227	3-713-625-01	SHOE, BRAKE	
228	3-713-626-01	COVER, MULTI	
229	3-713-628-01	SPRING, TORSION	
230	3-713-658-01	SPRING	
231	3-716-921-01	SPRING, LEAF	
232	3-719-590-01	ROLLER, ASSIST	
233	3-721-125-01	LEVER, LOCK	
234	3-721-136-01	SLIDER, LOCK	
235	3-721-163-01	SPRING	
236	3-721-166-01	LEVER, SWITCH	
237	3-739-116-01	SCREW (2X3), +PS	
S901	1-570-407-11	SWITCH, SLIDE (CASSETTE LOADING)	
S903	1-553-226-00	SWITCH, LEAF (CASSETTE LOCK)	

5-6. THREADING RING AND TAPE PATH ASSEMBLIES

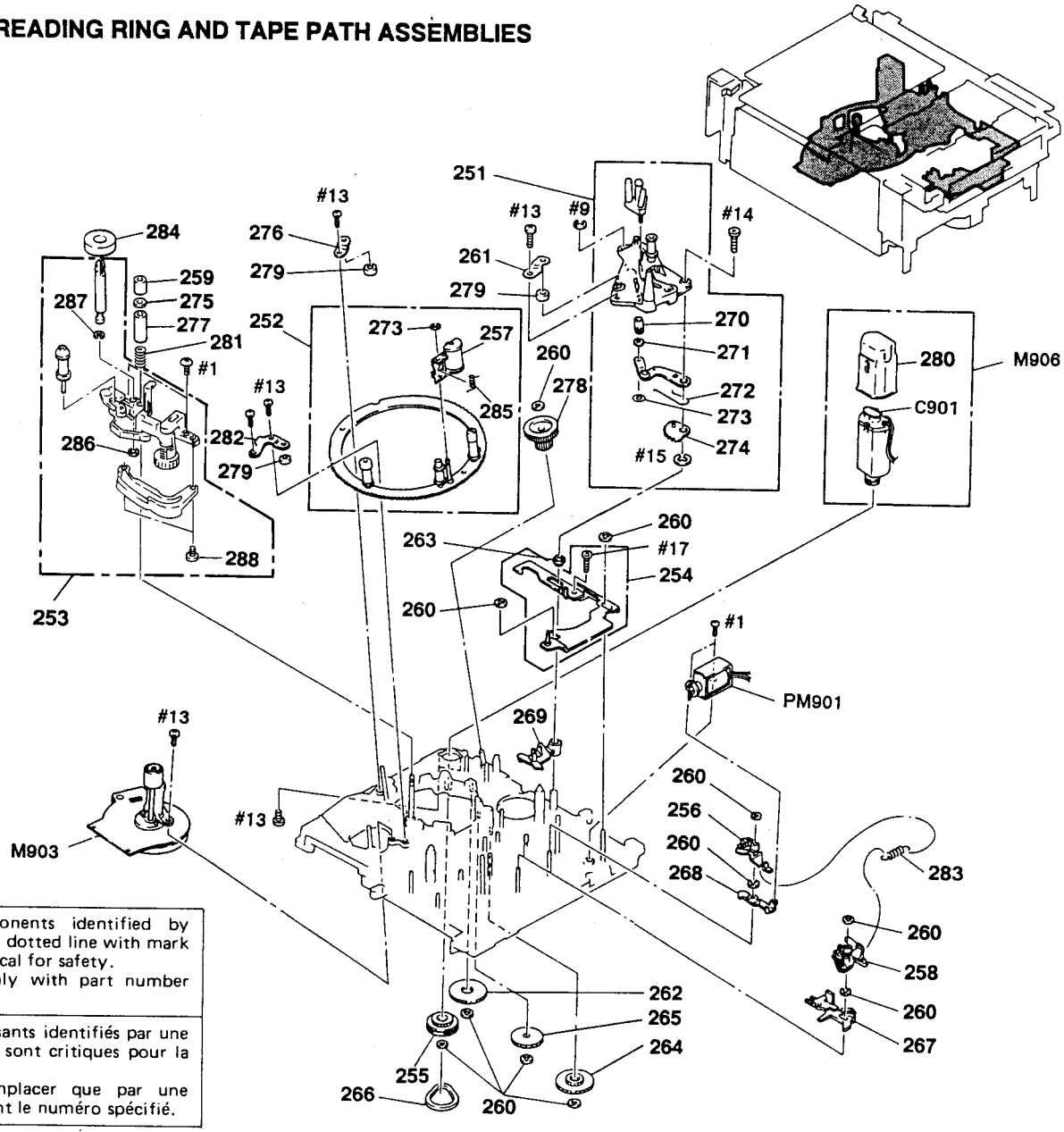

The components identified by mark ⚠ or dotted line with mark ⚠ are critical for safety.
Replace only with part number specified.

Les composants identifiés par une marque ⚠ sont critiques pour la sécurité.
Ne les remplacer que par une pièce portant le numéro spécifié.

Ref. No.	Part No.	Description	Remark
251	A-7040-001-A	GUIDE BLOCK ASSY, SLANT	
252	A-7040-123-A	RING ASSY, THREADING	
253	A-7040-169-D	GUIDE (P) ASSY, ENTRANCE	
254	A-7040-199-A	SLIDER (M) BLOCK ASSY, LOCK	
255	X-3686-514-1	GEAR ASSY, NO. 1	
256	X-3686-574-1	BRAKE ASSY, MAIN, TAKE-UP	
257	X-3686-576-1	ARM ASSY, PINCH ROLLER	
258	X-3713-429-1	BRAKE ASSY, MAIN, S	
259	3-686-724-01	NUT, GUIDE	
260	3-669-465-00	WASHER (1.5), STOPPER	
261	*3-686-503-01	RETAINER, ROLLER	
262	3-686-508-01	GEAR, NO. 2	
263	3-686-537-01	RETAINER, LOCK SLODER	
264	3-686-544-01	GEAR, NO. 4	
265	3-686-545-01	GEAR, NO. 3	
266	3-686-546-01	BELT, L-MOTOR	
267	*3-686-629-01	SLIDER, SELECTION, UPPER & LOWER	
268	*3-686-635-01	ARM, P	
269	*3-686-636-04	ARM, T.S RELEASE	
270	3-686-663-01	WASHER, STOPPER, 2 GANG	
271	3-701-436-21	WASHER, POLYETHYLENE	

Ref. No.	Part No.	Description	Remark
272	3-686-701-01	SPRING	
273	3-315-384-31	WASHER, STOPPER	
274	3-699-509-01	GEAR, SECTOR	
275	*3-686-894-01	FLANGE, #3 #4 GUIDE	
276	*3-686-911-01	PLATE, TOP, ROLLER	
277	3-686-912-01	GUIDE, #3 #4	
278	3-697-518-01	GEAR, NO. 10	
279	3-697-538-01	ROLLER, RING	
280	*3-686-757-01	CAP, SHIELD, L MOTOR	
281	3-699-609-01	SPRING, COMPRESSION	
282	*3-686-675-01	STOPPER, RING	
283	3-713-560-01	SPRING, TENSION	
284	3-722-153-01	FLYWHEEL	
285	*3-726-704-01	SPRING, TORSION	
286	3-315-414-00	WASHER	
287	3-578-254-00	RING, RETAINING, E1.2	
288	3-316-938-31	SCREW (B1.4X4), TAPPING	
C901	1-161-057-00	CERAMIC 0.033uF 10% 50V	
M903	8-835-364-01	MOTOR, DC BHF-2802B (CAPSTAN)	
M906	A-7040-065-A	MOTOR ASSY, L (LOADING)	
PM901⚠	1-454-377-31	SOLENOID, PLUNGER	

5-7. REEL CHASSIS ASSEMBLY

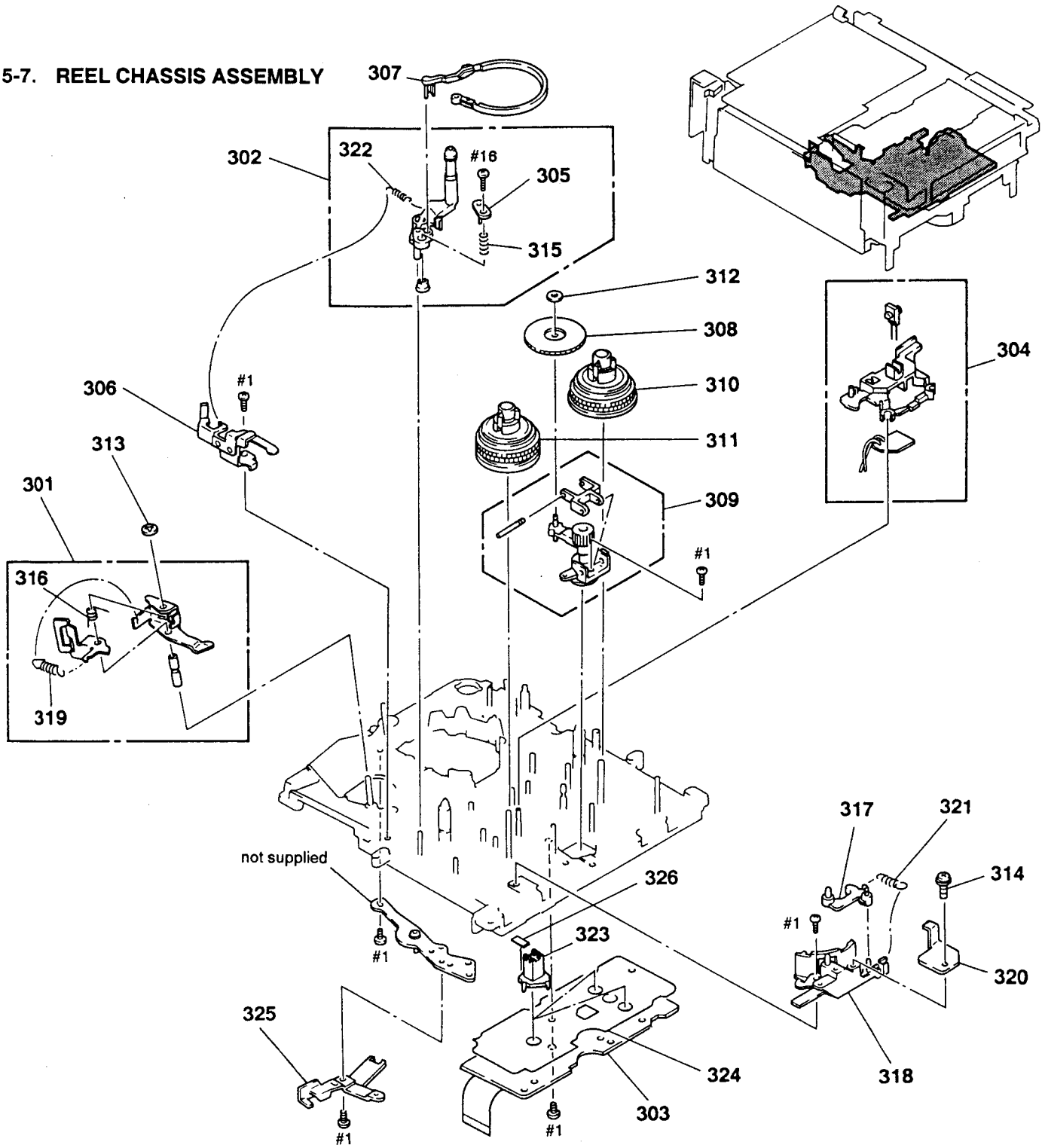

Ref. No.	Part No.	Description	Remark
301	A-7040-008-A	ARM ASSY, PINCH PRESS	
302	A-7040-071-A	ARM ASSY, TENSION REGULATOR	
303	*A-7061-818-A	RS-31 BOARD, COMPLETE	
304	*A-7070-024-A	LD-1 BOARD, COMPLETE	
305	*X-3686-523-1	PLATE ASSY, TENSION REGULATOR	
306	*X-3686-525-1	HOOK ASSY, SPRING	
307	X-3686-531-1	BAND ASSY, TENSION REGULATOR	
308	X-3686-763-1	GEAR (B) ASSY, DRIVING	
309	X-3711-963-1	DRIVING COMPLETE ASSY	
310	X-3711-998-1	TABLE ASSY, REEL, TAKE-UP	
311	X-3713-427-1	TABLE ASSY, REEL, S	
312	3-315-384-31	WASHER, STOPPER	
313	3-669-465-00	WASHER (1.5), STOPPER	

Ref. No.	Part No.	Description	Remark
314	3-669-480-11	+ PTPWH 2	
315	3-669-666-00	SPRING, COMPRESSION	
316	3-686-568-01	SPRING, TORSION	
317	*3-686-637-01	BRAKE (S), SOFT	
318	*3-686-760-01	GUIDE, BAND	
319	3-686-885-01	SPRING, TENSION	
320	*3-686-991-01	STOPPER, REEL TABLE	
321	3-714-014-01	SPRING, TENSION	
322	3-699-519-01	SPRING, TENSION	
323	3-712-410-01	HOLDER, RS	
324	3-712-411-01	INSULATOR, RS	
325	3-712-406-01	CLAMP, WIRE	
326	3-722-175-01	SPACER, MD	

5-8. HEAD DRUM AND THREADING RING ASSEMBLIES

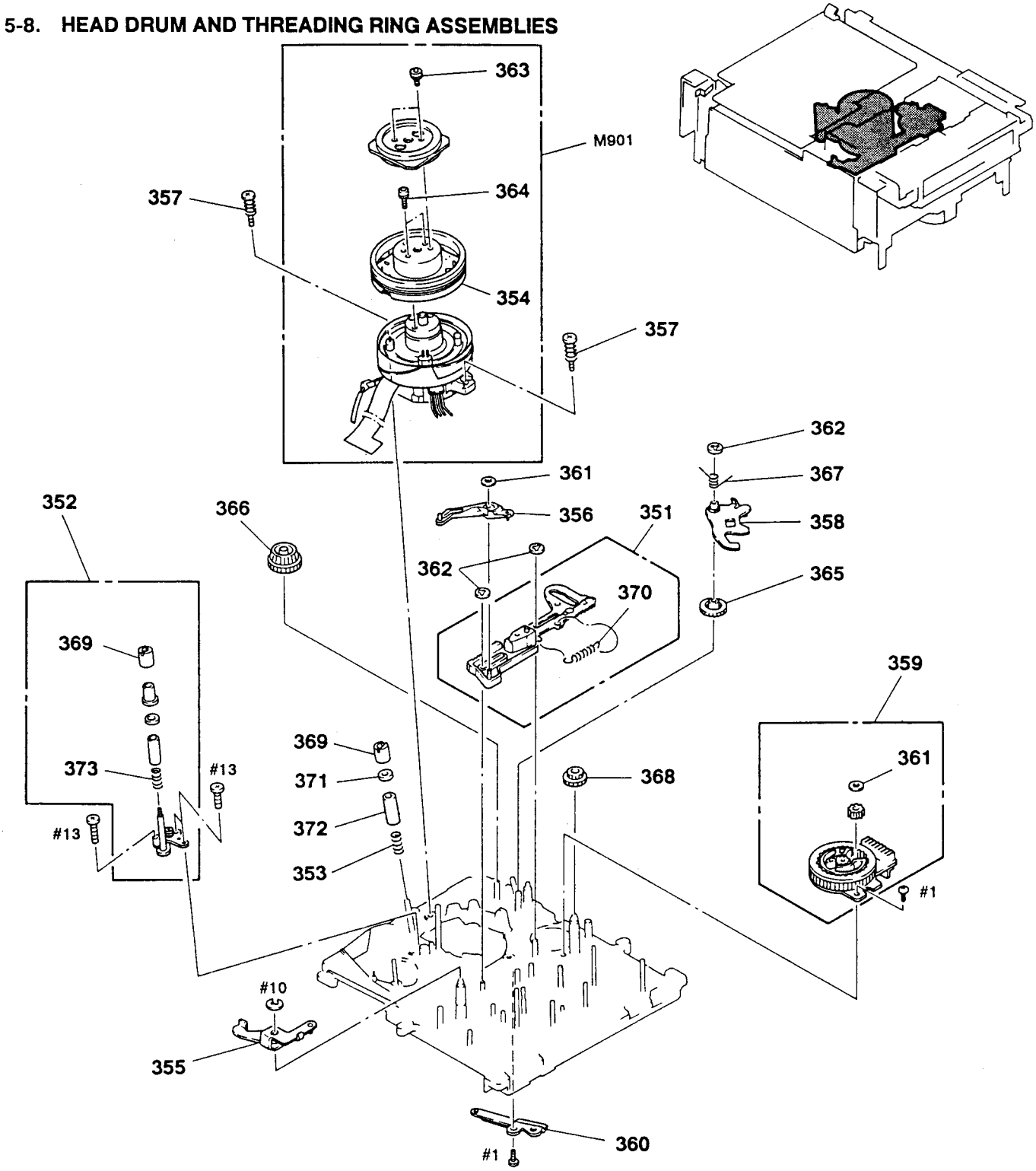

Ref. No.	Part No.	Description	Remark
351	*A-7040-010-A	SLIDER ASSY, L	
352	A-7040-058-A	GUIDE BLOCK COMPLETE ASSY, #5	
353	3-699-609-01	SPRING, COMPRESSION	
354	A-7049-188-A	DRUM ASSY, ROTALY UPPER (DGR-35-R)	
355	*X-3686-509-1	LEVER ASSY, PINCH PRESS	
356	*X-3686-518-3	ARM ASSY	
357	X-3686-569-1	SCREW ASSY, FITTING	
358	X-3686-579-1	CHANGE ASSY, DRIVE	
359	X-3712-403-1	L-SW ASSY (LS-9 BOARD)	
360	1-535-535-11	TERMINAL, SHAFT GROUND	
361	3-315-384-31	WASHER, STOPPER	
362	3-669-465-00	WASHER (1.5), STOPPER	
363	3-686-422-01	WASHER (2X2.7), BOLT HOLE	
364	3-686-493-01	SCREW (M2X5), P1	
365	3-686-535-01	GEAR, NO.8	
366	3-686-539-01	GEAR, NO.9	
367	3-686-540-01	SPRING, TORSION	
368	3-686-702-01	GEAR, DRIVING, GUIDE, SLANT	
369	3-686-724-01	NUT, GUIDE	
370	3-686-886-01	SPRING, TENSION	
371	*3-686-894-01	FLANGE, #3 #4 GUIDE	
372	3-686-912-01	GUIDE, #3 #4	
373	3-699-514-01	SPRING, COMPRESSION	
M901	A-7048-201-A	DRUM ASSY (DGH-35A-R)	

5-9. MECHANISM CONTROL CHASSIS ASSEMBLY

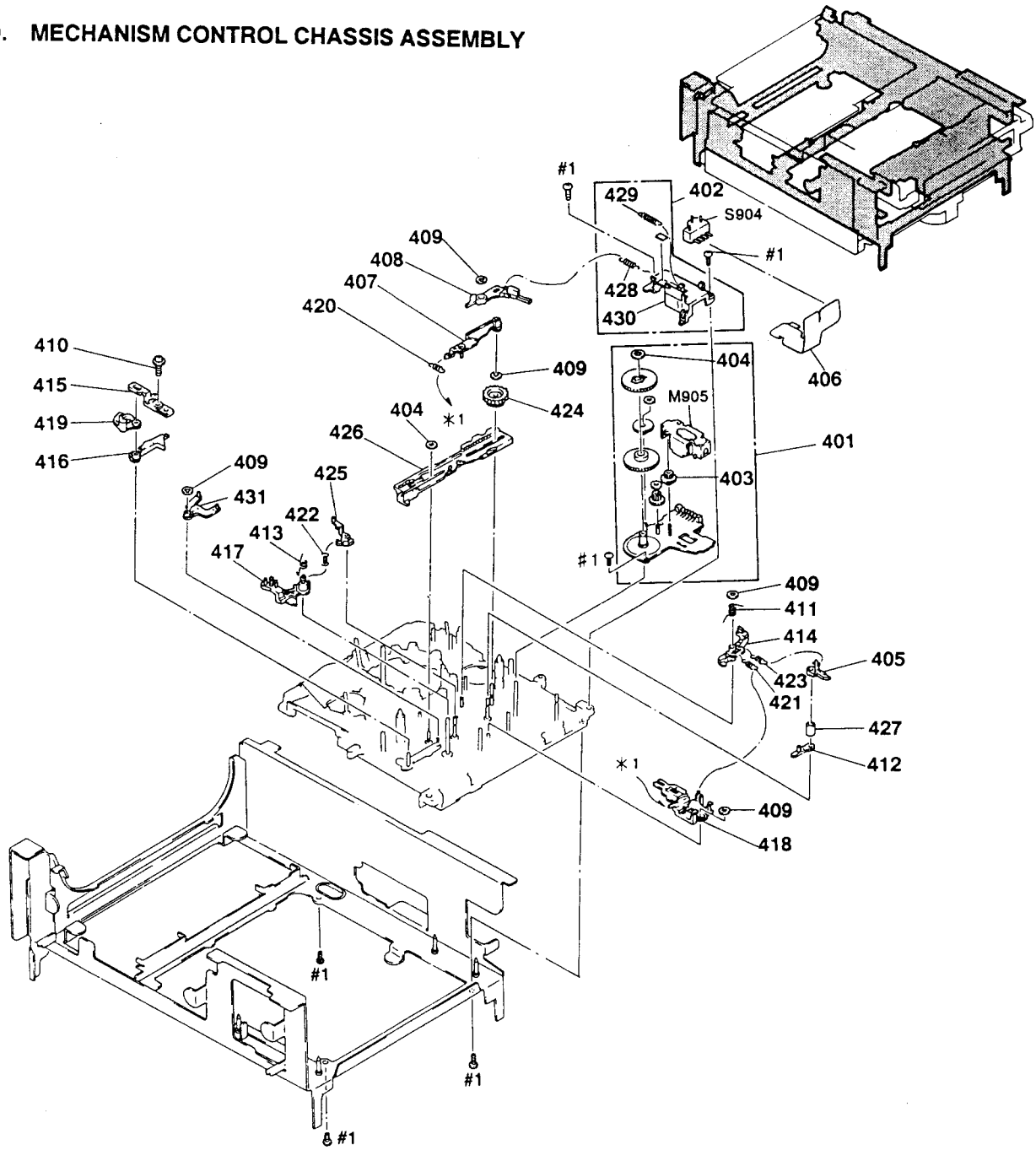

Ref. No.	Part No.	Description	Remark
401	A-7040-159-A	M-SW ASSY	
402	A-7040-198-A	COVER (M) ASSY, C MOTOR	
403	3-308-502-00	WHEEL, WORM	
404	3-315-384-31	WASHER, STOPPER	
405	X-3711-993-1	BRAKE ASSY, REW	
406	*1-630-923-11	FP-206 FLEXIBLE BOARD	
407	*X-3686-528-4	ARM ASSY, B RELEASE	
408	X-3711-987-2	BRAKE ASSY, T.S	
409	3-669-465-00	WASHER (1.5), STOPPER	
410	3-686-528-01	SCREW (2X6), +PSW	
411	3-686-579-01	SPRING	
412	*3-686-580-01	ARM, SET UP	
413	3-686-603-04	SPRING	
414	*3-686-634-01	ARM, RL	
415	*3-686-642-01	PLATE, ADJUSTMENT, BAND	
416	*3-686-643-01	ARM, MODE	
417	*3-686-644-01	ARM, BAND	
418	*3-686-656-01	SLIDER, B RELEASE	
419	*3-686-755-01	DISK, EJECT	
420	3-686-903-01	SPRING, TENSION	
421	3-686-904-01	SPRING, TENSION	
422	3-686-905-02	SPRING, TENSION	
423	3-686-906-01	SPRING, TENSION	
424	3-686-909-01	GEAR, MODE OUTPUT	
425	3-686-996-01	BRAKE (S), HARD	
426	3-716-935-01	SLIDER, M	
427	3-716-933-01	SPACER, REW BRAKE	
428	3-714-035-01	SPRING, TENSION	
429	3-722-110-01	SPRING, TENSION	
430	3-739-107-01	COVER (M), C MOTOR	
431	*X-3686-530-01	ARM (A) ASSY, SELECTION	
M905	8-835-138-01	MOTOR, DC (DNR-5301B) (CONTROL)	
S904	1-572-298-21	SWITCH, PUSH (REC PROOF, MPHG, ME/MP)	

SECTION 6
ELECTRICAL PARTS LIST

NOTE:

The components identified by mark ⚠ or dotted line with mark ⚠ are critical for safety.
Replace only with part number specified.

Les composants identifiés par une marque ⚠ sont critiques pour la sécurité.
Ne les remplacer que par une piéce portant le numéro spécifié.

When indicating parts by reference number, please include the board name.

- Due to standardization, replacements in the parts list may be different from the parts specified in the diagrams or the components used on the set.
- -XX, -X mean standardized parts, so they may have some difference from the original one.
- RESISTORS
  All resistors are in ohms
  METAL: Metal-film resistor
  METAL OXIDE: Metal Oxide-film resistor
  F : nonflammable
- Items marked "*" are not stocked since they are seldom required for routine service. Some delay should be anticipated when ordering these items.
- SEMICONDUCTORS
  In each case, u: μ , for example:
  uA...: μA..., uPA...: μPA...,
  uPB...: μPB..., uPC...: μPC...,
  uPD...: μPD...
- CAPACITORS
  uF : μF
- COILS
  uH : μH

Ref. No.	Part No.	Description			Remark
	* A-7062-654-A	FB-169 (P) BOARD, COMPLETE			
		**********			
	* 3-689-521-01	HOLDER, LED, ROUND			
	* 3-697-607-01	HOLDER (SU), LED			
	* 3-739-130-01	HOLDER, LEVEL METER			
	* 3-739-131-01	HOLDER (H), LED			
		〈 CAPACITOR 〉			
C001	1-163-035-00	CERAMIC CHIP	0.047uF		50V
C002	1-135-157-21	TANTALUM CHIP	10uF	20%	6.3V
C003	1-163-035-00	CERAMIC CHIP	0.047uF		50V
C006	1-163-035-00	CERAMIC CHIP	0.047uF		50V
C007	1-163-035-00	CERAMIC CHIP	0.047uF		50V
C008	1-163-105-00	CERAMIC CHIP	33PF	5%	50V
C009	1-163-105-00	CERAMIC CHIP	33PF	5%	50V
C010	1-163-035-00	CERAMIC CHIP	0.047uF		50V
C011	1-163-035-00	CERAMIC CHIP	0.047uF		50V
C012	1-163-035-00	CERAMIC CHIP	0.047uF		50V
C013	1-163-035-00	CERAMIC CHIP	0.047uF		50V
C014	1-135-157-21	TANTALUM CHIP	10uF	20%	6.3V
C015	1-163-035-00	CERAMIC CHIP	0.047uF		50V
C101	1-163-038-00	CERAMIC CHIP	0.1uF		25V
C102	1-163-038-00	CERAMIC CHIP	0.1uF		25V
C103	1-135-168-21	TANTALUM CHIP	100uF	20%	4V
C104	1-135-161-21	TANTALUM CHIP	22uF	10%	6.3V
C105	1-135-168-21	TANTALUM CHIP	100uF	20%	4V
C106	1-135-161-21	TANTALUM CHIP	22uF	10%	6.3V
C107	1-135-159-21	TANTALUM CHIP	10uF	10%	16V
C108	1-135-159-21	TANTALUM CHIP	10uF	10%	16V
C111	1-126-369-11	ELECT	220uF	20%	6.3V
C112	1-126-369-11	ELECT	220uF	20%	6.3V
C113	1-163-125-00	CERAMIC CHIP	220PF	5%	50V
C114	1-163-125-00	CERAMIC CHIP	220PF	5%	50V
C159	1-135-159-21	TANTALUM CHIP	10uF	10%	16V
C160	1-163-145-00	CERAMIC CHIP	0.0015uF	5%	50V
C161	1-163-038-00	CERAMIC CHIP	0.1uF		25V
C162	1-135-149-21	TANTALUM CHIP	2.2uF	20%	10V
C163	1-135-159-21	TANTALUM CHIP	10uF	10%	16V
C164	1-135-070-00	TANTALUM CHIP	0.1uF	10%	35V
C165	1-163-038-00	CERAMIC CHIP	0.1uF		25V
C166	1-163-038-00	CERAMIC CHIP	0.1uF		25V
C167	1-126-160-11	ELECT	1uF	20%	50V
C168	1-135-159-21	TANTALUM CHIP	10uF	10%	16V
C169	1-135-153-21	TANTALUM CHIP	2.2uF	10%	20V
C170	1-135-153-21	TANTALUM CHIP	2.2uF	10%	20V
C171	1-135-159-21	TANTALUM CHIP	10uF	10%	16V
C172	1-163-038-00	CERAMIC CHIP	0.1uF		25V
C173	1-163-014-00	CERAMIC CHIP	0.0027uF	5%	50V
C174	1-163-014-00	CERAMIC CHIP	0.0027uF	5%	50V
C175	1-163-012-00	CERAMIC CHIP	0.0018uF	10%	50V
C176	1-163-129-00	CERAMIC CHIP	330PF	5%	50V
		〈 CONNECTOR 〉			
CN001	1-569-301-11	PIN, CONNECTOR (PC BOARD) 5P			
CN002	1-569-301-11	PIN, CONNECTOR (PC BOARD) 5P			
CN003	1-569-301-11	PIN, CONNECTOR (PC BOARD) 5P			
CN004	1-569-301-11	PIN, CONNECTOR (PC BOARD) 5P			
CN101	1-506-469-11	CONNECTOR 4P, MALE			
		〈 DIODE 〉			
D001	8-719-800-76	DIODE 1SS226			
D009	8-719-945-82	DIODE GL5HS42 (STANDBY)			
D010	8-719-920-05	DIODE TLG123A (POWER)			
D011	8-719-907-92	DIODE GL5EG41 (PCM)			
D012	8-719-941-46	DIODE GL5HY41 (SP)			
D013	8-719-941-46	DIODE GL5HY41 (📼)			
D014	8-719-918-96	DIODE TLO123 (⏸)			
D015	8-719-812-32	DIODE TLY123 (⏩)			
D016	8-719-920-05	DIODE TLG123A (▶)			
D017	8-719-812-32	DIODE TLY123 (⏪)			
D018	8-719-939-36	DIODE GL5HY42 (⏏)			
D019	8-719-812-31	DIODE TLR123 (⏺)			
D020	8-719-913-59	DIODE LT-9230N (Hi8)			
D024	8-719-906-58	DIODE GL5HD41 (TIMER REC)			
D025	8-719-812-31	DIODE TLR123 (AUDIO DUB)			
D026	8-719-812-31	DIODE TLR123 (TC DUB)			
D101	8-719-104-34	DIODE 1S2836			
D102	8-719-104-34	DIODE 1S2836			
D103	1-520-503-11	METER UNIT, LED LEVEL			

Ref. No.	Part No.	Description	Remark
D155	8-719-104-34	DIODE 1S2836	
D156	8-719-104-34	DIODE 1S2836	
D157	8-719-400-18	DIODE MA152WK	
D158	8-719-104-34	DIODE 1S2836	
		〈 IC 〉	
IC001	8-752-830-17	IC CXP5046H-262Q	
IC002	8-759-937-56	IC S-8054ALB-LM-S	
IC003	8-741-100-48	IC SBX1610-59	
IC004	8-759-927-46	IC SN74HC00ANS	
IC101	8-759-981-XX	IC NJM4560M	
IC102	8-759-300-71	IC TC4053BFHB	
IC152	8-759-981-92	IC NJM4558M	
IC153	8-759-981-92	IC NJM4558M	
IC154	8-759-700-62	IC NJM4562M	
		〈 COIL 〉	
L001	1-408-789-21	INDUCTOR, CHIP 100uH	
L101	1-408-979-21	INDUCTOR 56uH	
		〈 TRANSISTOR 〉	
Q012	8-729-901-06	TRANSISTOR DTA144EK	
Q013	8-729-140-88	TRANSISTOR FP1A3M	
Q015	8-729-216-22	TRANSISTOR 2SA1162	
Q016	8-729-900-53	TRANSISTOR DTC114EK	
Q017	8-729-901-06	TRANSISTOR DTA144EK	
Q018	8-729-901-06	TRANSISTOR DTA144EK	
Q019	8-729-901-01	TRANSISTOR DTC144EK	
Q101	8-729-901-01	TRANSISTOR DTC144EK	
Q103	8-729-216-22	TRANSISTOR 2SA1162	
Q104	8-729-100-66	TRANSISTOR 2SC1623	
Q105	8-729-202-38	TRANSISTOR 2SC3326N	
Q106	8-729-202-38	TRANSISTOR 2SC3326N	
Q153	8-729-202-38	TRANSISTOR 2SC3326N	
Q154	8-729-202-38	TRANSISTOR 2SC3326N	
Q155	8-729-202-38	TRANSISTOR 2SC3326N	
Q156	8-729-100-66	TRANSISTOR 2SC1623	
Q157	8-729-901-06	TRANSISTOR DTA144EK	
Q158	8-729-901-06	TRANSISTOR DTA144EK	
Q159	8-729-901-01	TRANSISTOR DTC144EK	
Q160	8-729-140-75	TRANSISTOR 2SD999-CLCK	
Q161	8-729-101-07	TRANSISTOR 2SB798-DLDK	
Q162	8-729-202-38	TRANSISTOR 2SC3326N	
		〈 RESISTOR 〉	
R001	1-216-097-00	METAL CHIP 100K 5% 1/10W	
R002	1-216-089-00	METAL CHIP 47K 5% 1/10W	
R003	1-216-089-00	METAL CHIP 47K 5% 1/10W	
R005	1-216-065-00	METAL CHIP 4.7K 5% 1/10W	
R006	1-216-051-00	METAL CHIP 1.2K 5% 1/10W	
R007	1-216-055-00	METAL CHIP 1.8K 5% 1/10W	
R008	1-216-061-00	METAL CHIP 3.3K 5% 1/10W	
R009	1-216-065-00	METAL CHIP 4.7K 5% 1/10W	
R010	1-216-051-00	METAL CHIP 1.2K 5% 1/10W	
R011	1-216-055-00	METAL CHIP 1.8K 5% 1/10W	
R012	1-216-061-00	METAL CHIP 3.3K 5% 1/10W	
R013	1-216-065-00	METAL CHIP 4.7K 5% 1/10W	
R014	1-216-051-00	METAL CHIP 1.2K 5% 1/10W	
R015	1-216-055-00	METAL CHIP 1.8K 5% 1/10W	
R016	1-216-061-00	METAL CHIP 3.3K 5% 1/10W	
R017	1-216-089-00	METAL CHIP 47K 5% 1/10W	
R018	1-216-073-00	METAL CHIP 10K 5% 1/10W	
R019	1-216-089-00	METAL CHIP 47K 5% 1/10W	
R020	1-216-089-00	METAL CHIP 47K 5% 1/10W	
R021	1-216-049-00	METAL CHIP 1K 5% 1/10W	
R022	1-216-089-00	METAL CHIP 47K 5% 1/10W	
R023	1-216-089-00	METAL CHIP 47K 5% 1/10W	
R024	1-216-089-00	METAL CHIP 47K 5% 1/10W	
R025	1-216-089-00	METAL CHIP 47K 5% 1/10W	
R026	1-216-037-00	METAL CHIP 330 5% 1/10W	
R027	1-216-029-00	METAL CHIP 150 5% 1/10W	
R028	1-216-029-00	METAL CHIP 150 5% 1/10W	
R029	1-216-037-00	METAL CHIP 330 5% 1/10W	
R030	1-216-037-00	METAL CHIP 330 5% 1/10W	
R031	1-216-037-00	METAL CHIP 330 5% 1/10W	
R032	1-216-037-00	METAL CHIP 330 5% 1/10W	
R033	1-216-037-00	METAL CHIP 330 5% 1/10W	
R034	1-216-037-00	METAL CHIP 330 5% 1/10W	
R035	1-216-037-00	METAL CHIP 330 5% 1/10W	
R036	1-216-037-00	METAL CHIP 330 5% 1/10W	
R037	1-216-029-00	METAL CHIP 150 5% 1/10W	
R038	1-216-029-00	METAL CHIP 150 5% 1/10W	
R039	1-216-029-00	METAL CHIP 150 5% 1/10W	

FB-169 (P)

Ref. No.	Part No.	Description				Remark
R040	1-216-051-00	METAL CHIP	1.2K	5%	1/10W	
R041	1-216-061-00	METAL CHIP	3.3K	5%	1/10W	
R042	1-216-071-00	METAL CHIP	8.2K	5%	1/10W	
R043	1-216-089-00	METAL CHIP	47K	5%	1/10W	
R044	1-216-089-00	METAL CHIP	47K	5%	1/10W	
R045	1-216-065-00	METAL CHIP	4.7K	5%	1/10W	
R046	1-216-049-00	METAL CHIP	1K	5%	1/10W	
R047	1-216-055-00	METAL CHIP	1.8K	5%	1/10W	
R048	1-216-037-00	METAL CHIP	330	5%	1/10W	
R050	1-216-037-00	METAL CHIP	330	5%	1/10W	
R051	1-216-037-00	METAL CHIP	330	5%	1/10W	
R052	1-216-089-00	METAL CHIP	47K	5%	1/10W	
R053	1-216-033-00	METAL CHIP	220	5%	1/10W	
R054	1-216-033-00	METAL CHIP	220	5%	1/10W	
R055	1-216-033-00	METAL CHIP	220	5%	1/10W	
R103	1-216-073-00	METAL CHIP	10K	5%	1/10W	
R104	1-216-073-00	METAL CHIP	10K	5%	1/10W	
R105	1-216-113-00	METAL CHIP	470K	5%	1/10W	
R106	1-216-085-00	METAL CHIP	33K	5%	1/10W	
R107	1-216-085-00	METAL CHIP	33K	5%	1/10W	
R108	1-216-061-00	METAL CHIP	3.3K	5%	1/10W	
R109	1-216-061-00	METAL CHIP	3.3K	5%	1/10W	
R110	1-216-065-00	METAL CHIP	4.7K	5%	1/10W	
R111	1-216-113-00	METAL CHIP	470K	5%	1/10W	
R112	1-216-037-00	METAL CHIP	330	5%	1/10W	
R113	1-216-073-00	METAL CHIP	10K	5%	1/10W	
R114	1-216-073-00	METAL CHIP	10K	5%	1/10W	
R123	1-216-089-00	METAL CHIP	47K	5%	1/10W	
R124	1-216-065-00	METAL CHIP	4.7K	5%	1/10W	
R125	1-216-061-00	METAL CHIP	3.3K	5%	1/10W	
R126	1-216-061-00	METAL CHIP	3.3K	5%	1/10W	
R127	1-216-037-00	METAL CHIP	330	5%	1/10W	
R128	1-216-089-00	METAL CHIP	47K	5%	1/10W	
R129	1-216-065-00	METAL CHIP	4.7K	5%	1/10W	
R130	1-216-061-00	METAL CHIP	3.3K	5%	1/10W	
R131	1-216-295-00	METAL CHIP	0	5%	1/10W	
R132	1-216-069-00	METAL CHIP	6.8K	5%	1/10W	
R133	1-216-069-00	METAL CHIP	6.8K	5%	1/10W	
R134	1-216-061-00	METAL CHIP	3.3K	5%	1/10W	
R135	1-216-295-00	METAL CHIP	0	5%	1/10W	
R168	1-216-295-00	METAL CHIP	0	5%	1/10W	
R170	1-216-082-00	METAL GLAZE	24K	5%	1/10W	

Ref. No.	Part No.	Description				Remark
R171	1-216-295-00	METAL CHIP	0	5%	1/10W	
R173	1-216-082-00	METAL GLAZE	24K	5%	1/10W	
R174	1-216-079-00	METAL CHIP	18K	5%	1/10W	
R175	1-216-049-00	METAL CHIP	1K	5%	1/10W	
R176	1-216-097-00	METAL CHIP	100K	5%	1/10W	
R177	1-216-085-00	METAL CHIP	33K	5%	1/10W	
R178	1-216-097-00	METAL CHIP	100K	5%	1/10W	
R179	1-216-085-00	METAL CHIP	33K	5%	1/10W	
R180	1-216-079-00	METAL CHIP	18K	5%	1/10W	
R181	1-216-049-00	METAL CHIP	1K	5%	1/10W	
R182	1-216-089-00	METAL CHIP	47K	5%	1/10W	
R183	1-216-089-00	METAL CHIP	47K	5%	1/10W	
R184	1-216-089-00	METAL CHIP	47K	5%	1/10W	
R185	1-216-075-00	METAL CHIP	12K	5%	1/10W	
R186	1-216-049-00	METAL CHIP	1K	5%	1/10W	
R187	1-216-075-00	METAL CHIP	12K	5%	1/10W	
R188	1-216-103-00	METAL CHIP	180K	5%	1/10W	
R189	1-216-107-00	METAL CHIP	270K	5%	1/10W	
R190	1-216-069-00	METAL CHIP	6.8K	5%	1/10W	
R191	1-216-071-00	METAL CHIP	8.2K	5%	1/10W	
R192	1-216-093-00	METAL CHIP	68K	5%	1/10W	
R193	1-216-051-00	METAL CHIP	1.2K	5%	1/10W	
R194	1-216-295-00	METAL CHIP	0	5%	1/10W	
R195	1-216-049-00	METAL CHIP	1K	5%	1/10W	
R196	1-216-089-00	METAL CHIP	47K	5%	1/10W	
R197	1-216-089-00	METAL CHIP	47K	5%	1/10W	
R198	1-216-073-00	METAL CHIP	10K	5%	1/10W	
R199	1-216-107-00	METAL CHIP	270K	5%	1/10W	
R200	1-216-073-00	METAL CHIP	10K	5%	1/10W	
R201	1-216-071-00	METAL CHIP	8.2K	5%	1/10W	
R202	1-216-089-00	METAL CHIP	47K	5%	1/10W	
R203	1-216-105-00	METAL CHIP	220K	5%	1/10W	
R204	1-216-105-00	METAL CHIP	220K	5%	1/10W	

〈 VARIABLE RESISTOR 〉

RV001	1-230-122-00	RES, VAR, CARBON 100K
RV002	1-230-874-11	RES, ADJ, METAL 100K
RV101	1-228-988-00	RES, VAR, CARBON 10K/10K
RV151	1-230-122-00	RES, VAR, CARBON 100K
RV152	1-230-122-00	RES, VAR, CARBON 100K

Ref. No.	Part No.	Description			Remark
		⟨ SWITCH ⟩			
S001	1-554-174-00	SWITCH, KEY BOARD (■ STOP)			
S002	1-554-174-00	SWITCH, KEY BOARD (● REC)			
S003	1-554-174-00	SWITCH, KEY BOARD (▸▸ FF)			
S004	1-554-174-00	SWITCH, KEY BOARD (▲ EJECT)			
S005	1-554-174-00	SWITCH, KEY BOARD (▶ PLAY)			
S006	1-554-174-00	SWITCH, KEY BOARD (▮▮ PAUSE)			
S007	1-554-174-00	SWITCH, KEY BOARD (POWER)			
S008	1-554-174-00	SWITCH, KEY BOARD (◂◂ REW)			
S009	1-554-174-00	SWITCH, KEY BOARD (RESET)			
S010	1-570-864-11	SWITCH, SLIDE (TC COUNTER)			
S011	1-570-836-11	SWITCH, SLIDE (AUDIO OUTPUT)			
S012	1-570-854-11	SWITCH, SLIDE (TIMER)			
S013	1-570-864-11	SWITCH, SLIDE (AUTO REPEAT)			
S014	1-570-864-11	SWITCH, SLIDE (INPUT SELECT)			
S015	1-554-174-00	SWITCH, KEY BOARD (AUDIO DUB)			
S016	1-571-787-11	SWITCH, TACTILE (▮▶)			
S017	1-571-787-11	SWITCH, TACTILE (◀▮)			
S018	1-554-174-00	SWITCH, KEY BOARD (TC DUB)			
		⟨ CRYSTAL ⟩			
X001	1-567-346-11	OSCILLATOR, CERAMIC (5MHz)			
**********					
	* A-7061-821-A	FR-40 BOARD, COMPLETE			
		**********			
	1-559-763-11	WIRE, FLAT TYPE 26P			
	* 3-739-102-01	LID (H), UPPER, FR SHIELD CASE			
		⟨ CAPACITOR ⟩			
C001	1-135-091-00	TANTALUM CHIP	1uF	20%	16V
C002	1-163-035-00	CERAMIC CHIP	0.047uF		50V
C003	1-135-091-00	TANTALUM CHIP	1uF	20%	16V
C004	1-163-035-00	CERAMIC CHIP	0.047uF		50V
C005	1-135-091-00	TANTALUM CHIP	1uF	20%	16V
C006	1-163-035-00	CERAMIC CHIP	0.047uF		50V
C007	1-135-091-00	TANTALUM CHIP	1uF	20%	16V
C008	1-163-035-00	CERAMIC CHIP	0.047uF		50V
C009	1-135-161-21	TANTALUM CHIP	22uF	10%	6.3V
C010	1-163-038-00	CERAMIC CHIP	0.1uF		25V
C011	1-163-017-00	CERAMIC CHIP	0.0047uF	5%	50V
C012	1-135-157-21	TANTALUM CHIP	10uF	20%	6.3V
C013	1-163-038-00	CERAMIC CHIP	0.1uF		25V
C031	1-135-157-21	TANTALUM CHIP	10uF	20%	6.3V
C032	1-164-232-11	CERAMIC CHIP	0.01uF		50V
C033	1-164-232-11	CERAMIC CHIP	0.01uF		50V
C034	1-163-038-00	CERAMIC CHIP	0.1uF		25V
C041	1-164-232-11	CERAMIC CHIP	0.01uF		50V
C042	1-163-038-00	CERAMIC CHIP	0.1uF		25V
C044	1-163-117-00	CERAMIC CHIP	100PF	5%	50V
C045	1-163-117-00	CERAMIC CHIP	100PF	5%	50V
C046	1-163-121-00	CERAMIC CHIP	150PF	5%	50V
C047	1-163-115-00	CERAMIC CHIP	82PF	5%	50V
C051	1-163-038-00	CERAMIC CHIP	0.1uF		25V
C052	1-135-156-21	TANTALUM CHIP	6.8uF	10%	6.3V
C053	1-135-148-21	TANTALUM CHIP	1.5uF	20%	10V
C054	1-163-037-11	CERAMIC CHIP	0.022uF	10%	25V
C055	1-163-037-11	CERAMIC CHIP	0.022uF	10%	25V
C056	1-163-037-11	CERAMIC CHIP	0.022uF	10%	25V
		⟨ CONNECTOR ⟩			
CN001	1-562-629-11	SOCKET, CONNECTOR 19P			
CN002	1-565-209-11	CONNECTOR, FPC (ZIF) 26P			
CN003	1-506-473-11	CONNECTOR 8P, MALE			
CN004	1-506-472-11	CONNECTOR 7P, MALE			
		⟨ DIODE ⟩			
D001	8-719-400-18	DIODE MA152WK			
		⟨ IC ⟩			
IC051	8-759-710-09	IC NJM2233AM			
		⟨ COIL ⟩			
L001	1-408-777-00	INDUCTOR CHIP 10uH			
		⟨ TRANSISTOR ⟩			
Q001	8-729-202-38	TRANSISTOR 2SC3326N			
Q002	8-729-202-38	TRANSISTOR 2SC3326N			
Q003	8-729-202-38	TRANSISTOR 2SC3326N			
Q004	8-729-202-38	TRANSISTOR 2SC3326N			
Q005	8-729-901-05	TRANSISTOR DTA124EK			

FB-169 (P) HE-2 HK-4

Ref. No.	Part No.	Description				Remark
Q006	8-729-901-05	TRANSISTOR DTA124EK				
Q007	8-729-901-01	TRANSISTOR DTC144EK				
Q008	8-729-901-01	TRANSISTOR DTC144EK				
Q009	8-729-320-17	TRANSISTOR 2SA1122CD				
Q031	8-729-201-27	TRANSISTOR 2SC2715				
Q032	8-729-102-07	TRANSISTOR 2SC2223				
Q041	8-729-216-22	TRANSISTOR 2SA1162				
Q042	8-729-119-76	TRANSISTOR 2SA1175				
Q043	8-729-320-17	TRANSISTOR 2SA1122CD				
		〈 RESISTOR 〉				
R001	1-216-065-00	METAL CHIP	4.7K	5%	1/10W	
R002	1-216-065-00	METAL CHIP	4.7K	5%	1/10W	
R003	1-216-097-00	METAL CHIP	100K	5%	1/10W	
R004	1-216-065-00	METAL CHIP	4.7K	5%	1/10W	
R005	1-216-065-00	METAL CHIP	4.7K	5%	1/10W	
R006	1-216-097-00	METAL CHIP	100K	5%	1/10W	
R007	1-216-065-00	METAL CHIP	4.7K	5%	1/10W	
R008	1-216-065-00	METAL CHIP	4.7K	5%	1/10W	
R009	1-216-097-00	METAL CHIP	100K	5%	1/10W	
R010	1-216-065-00	METAL CHIP	4.7K	5%	1/10W	
R011	1-216-065-00	METAL CHIP	4.7K	5%	1/10W	
R012	1-216-097-00	METAL CHIP	100K	5%	1/10W	
R016	1-216-073-00	METAL CHIP	10K	5%	1/10W	
R017	1-216-049-00	METAL CHIP	1K	5%	1/10W	
R018	1-216-695-11	METAL CHIP	68K	0.5%	1/10W	
R019	1-216-061-00	METAL CHIP	3.3K	5%	1/10W	
R020	1-216-025-00	METAL CHIP	100	5%	1/10W	
R021	1-216-025-00	METAL CHIP	100	5%	1/10W	
R022	1-216-025-00	METAL CHIP	100	5%	1/10W	
R023	1-216-025-00	METAL CHIP	100	5%	1/10W	
R024	1-216-033-00	METAL CHIP	220	5%	1/10W	
R025	1-216-027-00	METAL CHIP	120	5%	1/10W	
R031	1-216-041-00	METAL CHIP	470	5%	1/10W	
R032	1-216-047-00	METAL CHIP	820	5%	1/10W	
R033	1-216-035-00	METAL CHIP	270	5%	1/10W	
R034	1-216-039-00	METAL CHIP	390	5%	1/10W	
R035	1-216-085-00	METAL CHIP	33K	5%	1/10W	
R036	1-216-077-00	METAL CHIP	15K	5%	1/10W	
R041	1-216-085-00	METAL CHIP	33K	5%	1/10W	
R042	1-216-081-00	METAL CHIP	22K	5%	1/10W	
R043	1-216-035-00	METAL CHIP	270	5%	1/10W	
R044	1-216-033-00	METAL CHIP	220	5%	1/10W	
R045	1-216-021-00	METAL CHIP	68	5%	1/10W	
R046	1-216-009-00	METAL CHIP	22	5%	1/10W	
R047	1-216-043-00	METAL CHIP	560	5%	1/10W	
R048	1-216-081-00	METAL CHIP	22K	5%	1/10W	
R049	1-216-057-00	METAL CHIP	2.2K	5%	1/10W	
R051	1-216-035-00	METAL CHIP	270	5%	1/10W	
R052	1-216-025-00	METAL CHIP	100	5%	1/10W	
**********						
*	1-633-695-11	HE-2 BOARD				
		**********				
		〈 CONNECTOR 〉				
CN201	1-506-468-11	CONNECTOR 3P, MALE				
		〈 JACK 〉				
J201	1-507-792-00	JACK (HEADPHONES)				
**********						
*	A-7061-820-A	HK-4 BOARD, COMPLETE				
		**********				
	3-531-576-01	RIVET				
	3-671-893-00	CLAMP (LOW TYPE)				
*	3-724-107-01	RETAINER, PC BOARD				
	3-831-441-XX	CUSHION (5)				
		〈 CAPACITOR 〉				
C101	1-135-166-21	TANTALUM CHIP	47uF	10%	10V	
C102	1-163-035-00	CERAMIC CHIP	0.047uF		50V	
C103	1-163-035-00	CERAMIC CHIP	0.047uF		50V	
C104	1-163-145-00	CERAMIC CHIP	0.0015uF	5%	50V	
C105	1-163-035-00	CERAMIC CHIP	0.047uF		50V	
C106	1-163-127-00	CERAMIC CHIP	270PF	5%	50V	
C107	1-163-035-00	CERAMIC CHIP	0.047uF		50V	
C108	1-163-115-00	CERAMIC CHIP	82PF	5%	50V	
C109	1-163-109-00	CERAMIC CHIP	47PF	5%	50V	
C110	1-163-103-00	CERAMIC CHIP	27PF	5%	50V	
C111	1-163-241-11	CERAMIC CHIP	39PF	5%	50V	

Ref. No.	Part No.	Description			Remark
C112	1-163-245-11	CERAMIC CHIP	56PF	5%	50V
C113	1-163-035-00	CERAMIC CHIP	0.047uF		50V
C114	1-163-035-00	CERAMIC CHIP	0.047uF		50V
C115	1-163-035-00	CERAMIC CHIP	0.047uF		50V
C116	1-135-070-00	TANTALUM CHIP	0.1uF	10%	35V
C117	1-163-035-00	CERAMIC CHIP	0.047uF		50V
C118	1-163-224-11	CERAMIC CHIP	7PF	0.25PF	50V
C119	1-163-227-11	CERAMIC CHIP	10PF	5%	50V
C120	1-163-035-00	CERAMIC CHIP	0.047uF		50V
C122	1-163-088-00	CERAMIC CHIP	5PF		50V
C123	1-163-035-00	CERAMIC CHIP	0.047uF		50V
C124	1-163-104-00	CERAMIC CHIP	30PF	5%	50V
C126	1-163-035-00	CERAMIC CHIP	0.047uF		50V
C127	1-163-035-00	CERAMIC CHIP	0.047uF		50V
C128	1-163-035-00	CERAMIC CHIP	0.047uF		50V
C129	1-163-095-00	CERAMIC CHIP	12PF	5%	50V
C130	1-163-035-00	CERAMIC CHIP	0.047uF		50V
C131	1-163-251-11	CERAMIC CHIP	100PF	5%	50V
C132	1-163-035-00	CERAMIC CHIP	0.047uF		50V
C133	1-163-097-00	CERAMIC CHIP	15PF	5%	50V
C134	1-163-227-11	CERAMIC CHIP	10PF	5%	50V
C135	1-163-224-11	CERAMIC CHIP	7PF	0.25PF	50V
C136	1-163-099-00	CERAMIC CHIP	18PF	5%	50V
C137	1-163-035-00	CERAMIC CHIP	0.047uF		50V
C138	1-163-035-00	CERAMIC CHIP	0.047uF		50V
C139	1-163-035-00	CERAMIC CHIP	0.047uF		50V
C140	1-163-035-00	CERAMIC CHIP	0.047uF		50V
C141	1-163-035-00	CERAMIC CHIP	0.047uF		50V
C142	1-163-035-00	CERAMIC CHIP	0.047uF		50V
C143	1-135-149-21	TANTALUM CHIP	2.2uF	20%	10V
C145	1-163-117-00	CERAMIC CHIP	100PF	5%	50V
C146	1-163-035-00	CERAMIC CHIP	0.047uF		50V
C147	1-163-035-00	CERAMIC CHIP	0.047uF		50V
C181	1-163-141-00	CERAMIC CHIP	0.001uF	5%	50V
C182	1-163-141-00	CERAMIC CHIP	0.001uF	5%	50V
C183	1-163-035-00	CERAMIC CHIP	0.047uF		50V
C201	1-135-166-21	TANTALUM CHIP	47uF	10%	10V
C202	1-163-035-00	CERAMIC CHIP	0.047uF		50V
C204	1-163-127-00	CERAMIC CHIP	270PF	5%	50V
C206	1-163-035-00	CERAMIC CHIP	0.047uF		50V
C207	1-163-035-00	CERAMIC CHIP	0.047uF		50V
C208	1-163-097-00	CERAMIC CHIP	15PF	5%	50V

Ref. No.	Part No.	Description			Remark
C209	1-163-235-11	CERAMIC CHIP	22PF	5%	50V
C210	1-163-106-00	CERAMIC CHIP	36PF	5%	50V
C211	1-163-035-00	CERAMIC CHIP	0.047uF		50V
C212	1-135-156-21	TANTALUM CHIP	6.8uF	10%	6.3V
C213	1-163-035-00	CERAMIC CHIP	0.047uF		50V
C214	1-163-035-00	CERAMIC CHIP	0.047uF		50V
C215	1-163-035-00	CERAMIC CHIP	0.047uF		50V
C216	1-163-035-00	CERAMIC CHIP	0.047uF		50V
C217	1-163-035-00	CERAMIC CHIP	0.047uF		50V
C218	1-163-035-00	CERAMIC CHIP	0.047uF		50V
C219	1-163-035-00	CERAMIC CHIP	0.047uF		50V
C220	1-163-035-00	CERAMIC CHIP	0.047uF		50V
C221	1-163-035-00	CERAMIC CHIP	0.047uF		50V
C222	1-163-035-00	CERAMIC CHIP	0.047uF		50V
C223	1-163-035-00	CERAMIC CHIP	0.047uF		50V
C224	1-163-035-00	CERAMIC CHIP	0.047uF		50V
C225	1-163-097-00	CERAMIC CHIP	15PF	5%	50V
C226	1-163-122-00	CERAMIC CHIP	160PF	5%	50V
C227	1-163-120-00	CERAMIC CHIP	130PF	5%	50V
C228	1-163-122-00	CERAMIC CHIP	160PF	5%	50V
C297	1-163-125-00	CERAMIC CHIP	220PF	5%	50V
C298	1-163-125-00	CERAMIC CHIP	220PF	5%	50V
C299	1-163-037-11	CERAMIC CHIP	0.022uF	10%	25V
C302	1-135-162-21	TANTALUM CHIP	33uF	20%	6.3V
C303	1-163-095-00	CERAMIC CHIP	12PF	5%	50V
C304	1-163-099-00	CERAMIC CHIP	18PF	5%	50V
C305	1-163-137-00	CERAMIC CHIP	680PF	5%	50V
C307	1-163-035-00	CERAMIC CHIP	0.047uF		50V
C308	1-135-156-21	TANTALUM CHIP	6.8uF	10%	6.3V
C309	1-163-035-00	CERAMIC CHIP	0.047uF		50V
C311	1-163-121-00	CERAMIC CHIP	150PF	5%	50V
C313	1-135-166-21	TANTALUM CHIP	47uF	10%	10V
C314	1-163-241-11	CERAMIC CHIP	39PF	5%	50V
C316	1-163-241-11	CERAMIC CHIP	39PF	5%	50V
C317	1-163-245-11	CERAMIC CHIP	56PF	5%	50V
C318	1-164-491-11	CERAMIC CHIP	300PF	1%	50V
C319	1-163-035-00	CERAMIC CHIP	0.047uF		50V
C320	1-163-133-00	CERAMIC CHIP	470PF	5%	50V
C321	1-163-809-11	CERAMIC CHIP	0.047uF	10%	25V
C322	1-163-038-00	CERAMIC CHIP	0.1uF		25V
C323	1-163-012-00	CERAMIC CHIP	0.0018uF	10%	50V
C324	1-163-035-00	CERAMIC CHIP	0.047uF		50V

HK-4

Ref. No.	Part No.	Description			Remark
C325	1-135-156-21	TANTALUM CHIP	6.8uF	10%	6.3V
C326	1-163-035-00	CERAMIC CHIP	0.047uF		50V
C327	1-135-156-21	TANTALUM CHIP	6.8uF	10%	6.3V
C328	1-163-035-00	CERAMIC CHIP	0.047uF		50V
C329	1-135-166-21	TANTALUM CHIP	47uF	10%	10V
C330	1-163-035-00	CERAMIC CHIP	0.047uF		50V
C331	1-135-091-00	TANTALUM CHIP	1uF	20%	16V
C332	1-135-155-21	TANTALUM CHIP	4.7uF	10%	10V
C334	1-135-155-21	TANTALUM CHIP	4.7uF	10%	10V
C335	1-163-035-00	CERAMIC CHIP	0.047uF		50V
C337	1-163-113-00	CERAMIC CHIP	68PF	5%	50V
C338	1-163-035-00	CERAMIC CHIP	0.047uF		50V
C339	1-163-035-00	CERAMIC CHIP	0.047uF		50V
C340	1-135-072-21	TANTALUM CHIP	0.22uF	10%	35V
C341	1-135-157-21	TANTALUM CHIP	10uF	20%	6.3V
C343	1-163-809-11	CERAMIC CHIP	0.047uF	10%	25V
C344	1-163-117-00	CERAMIC CHIP	100PF	5%	50V
C345	1-163-134-00	CERAMIC CHIP	510PF	5%	50V
C347	1-163-035-00	CERAMIC CHIP	0.047uF		50V
C401	1-163-109-00	CERAMIC CHIP	47PF	5%	50V
C402	1-124-968-11	ELECT	22uF	20%	6.3V
C403	1-163-106-00	CERAMIC CHIP	36PF	5%	50V
C404	1-163-245-11	CERAMIC CHIP	56PF	5%	50V
C405	1-163-099-00	CERAMIC CHIP	18PF	5%	50V
C406	1-163-133-00	CERAMIC CHIP	470PF	5%	50V
C407	1-135-149-21	TANTALUM CHIP	2.2uF	20%	10V
C408	1-163-093-00	CERAMIC CHIP	10PF	5%	50V
C409	1-164-232-11	CERAMIC CHIP	0.01uF		50V
C410	1-163-109-00	CERAMIC CHIP	47PF	5%	50V
C411	1-163-088-00	CERAMIC CHIP	5PF		50V
C412	1-135-156-21	TANTALUM CHIP	6.8uF	10%	6.3V
C413	1-163-035-00	CERAMIC CHIP	0.047uF		50V
C414	1-164-232-11	CERAMIC CHIP	0.01uF		50V
C415	1-163-235-11	CERAMIC CHIP	22PF	5%	50V
C416	1-164-232-11	CERAMIC CHIP	0.01uF		50V
C417	1-163-263-11	CERAMIC CHIP	330PF	5%	50V
C418	1-163-131-00	CERAMIC CHIP	390PF	5%	50V
C419	1-164-491-11	CERAMIC CHIP	300PF	1%	50V
C420	1-135-156-21	TANTALUM CHIP	6.8uF	10%	6.3V
C421	1-163-035-00	CERAMIC CHIP	0.047uF		50V
C422	1-163-035-00	CERAMIC CHIP	0.047uF		50V
C423	1-163-035-00	CERAMIC CHIP	0.047uF		50V
C424	1-135-155-21	TANTALUM CHIP	4.7uF	10%	10V
C427	1-135-157-21	TANTALUM CHIP	10uF	20%	6.3V
C428	1-135-161-21	TANTALUM CHIP	22uF	10%	6.3V
C429	1-135-157-21	TANTALUM CHIP	10uF	20%	6.3V
C501	1-135-166-21	TANTALUM CHIP	47uF	10%	10V
C502	1-163-035-00	CERAMIC CHIP	0.047uF		50V
C503	1-163-141-00	CERAMIC CHIP	0.001uF	5%	50V
C504	1-163-038-00	CERAMIC CHIP	0.1uF		25V
C505	1-164-232-11	CERAMIC CHIP	0.01uF		50V
C506	1-163-105-00	CERAMIC CHIP	33PF	5%	50V
C507	1-163-035-00	CERAMIC CHIP	0.047uF		50V
C508	1-163-105-00	CERAMIC CHIP	33PF	5%	50V
C509	1-135-156-21	TANTALUM CHIP	6.8uF	10%	6.3V
C510	1-135-156-21	TANTALUM CHIP	6.8uF	10%	6.3V
C512	1-135-149-21	TANTALUM CHIP	2.2uF	20%	10V
C513	1-163-035-00	CERAMIC CHIP	0.047uF		50V
C514	1-163-133-00	CERAMIC CHIP	470PF	5%	50V
C515	1-163-105-00	CERAMIC CHIP	33PF	5%	50V
C516	1-135-155-21	TANTALUM CHIP	4.7uF	10%	10V
C517	1-163-121-00	CERAMIC CHIP	150PF	5%	50V
C519	1-135-149-21	TANTALUM CHIP	2.2uF	20%	10V
C520	1-163-245-11	CERAMIC CHIP	56PF	5%	50V
C521	1-163-103-00	CERAMIC CHIP	27PF	5%	50V
C522	1-163-035-00	CERAMIC CHIP	0.047uF		50V
C523	1-163-035-00	CERAMIC CHIP	0.047uF		50V
C524	1-163-141-00	CERAMIC CHIP	0.001uF	5%	50V
C525	1-163-035-00	CERAMIC CHIP	0.047uF		50V
C526	1-135-161-21	TANTALUM CHIP	22uF	10%	6.3V
C527	1-135-161-21	TANTALUM CHIP	22uF	10%	6.3V
C528	1-163-141-00	CERAMIC CHIP	0.001uF	5%	50V
C529	1-163-035-00	CERAMIC CHIP	0.047uF		50V
C530	1-163-227-11	CERAMIC CHIP	10PF	5%	50V
C601	1-135-156-21	TANTALUM CHIP	6.8uF	10%	6.3V
C602	1-163-035-00	CERAMIC CHIP	0.047uF		50V
C603	1-163-129-00	CERAMIC CHIP	330PF	5%	50V
C604	1-163-035-00	CERAMIC CHIP	0.047uF		50V
C605	1-163-251-11	CERAMIC CHIP	100PF	5%	50V
C606	1-163-141-00	CERAMIC CHIP	0.001uF	5%	50V
C607	1-135-070-00	TANTALUM CHIP	0.1uF	10%	35V
C608	1-163-129-00	CERAMIC CHIP	330PF	5%	50V
C609	1-135-156-21	TANTALUM CHIP	6.8uF	10%	6.3V
C610	1-163-035-00	CERAMIC CHIP	0.047uF		50V

Ref. No.	Part No.	Description			Remark
C611	1-163-035-00	CERAMIC CHIP	0.047uF		50V
C612	1-163-035-00	CERAMIC CHIP	0.047uF		50V
C613	1-135-073-00	TANTALUM CHIP	0.33uF	10%	35V
C614	1-163-098-00	CERAMIC CHIP	16PF	5%	50V
C615	1-163-141-00	CERAMIC CHIP	0.001uF	5%	50V
C616	1-163-109-00	CERAMIC CHIP	47PF	5%	50V
C617	1-163-129-00	CERAMIC CHIP	330PF	5%	50V
C618	1-163-129-00	CERAMIC CHIP	330PF	5%	50V
C619	1-163-035-00	CERAMIC CHIP	0.047uF		50V
C620	1-163-037-11	CERAMIC CHIP	0.022uF	10%	25V
C621	1-135-155-21	TANTALUM CHIP	4.7uF	10%	10V
C622	1-135-156-21	TANTALUM CHIP	6.8uF	10%	6.3V
C623	1-135-156-21	TANTALUM CHIP	6.8uF	10%	6.3V
C624	1-163-035-00	CERAMIC CHIP	0.047uF		50V
C626	1-163-141-00	CERAMIC CHIP	0.001uF	5%	50V
C627	1-135-149-21	TANTALUM CHIP	2.2uF	20%	10V
C628	1-163-035-00	CERAMIC CHIP	0.047uF		50V
C629	1-163-035-00	CERAMIC CHIP	0.047uF		50V
C630	1-163-141-00	CERAMIC CHIP	0.001uF	5%	50V
C631	1-135-072-21	TANTALUM CHIP	0.22uF	10%	35V
C632	1-135-149-21	TANTALUM CHIP	2.2uF	20%	10V
C634	1-135-149-21	TANTALUM CHIP	2.2uF	20%	10V
C635	1-164-182-11	CERAMIC CHIP	0.0033uF	10%	50V
C636	1-163-129-00	CERAMIC CHIP	330PF	5%	50V
C637	1-135-149-21	TANTALUM CHIP	2.2uF	20%	10V
C638	1-163-141-00	CERAMIC CHIP	0.001uF	5%	50V
C639	1-163-129-00	CERAMIC CHIP	330PF	5%	50V
C640	1-163-109-00	CERAMIC CHIP	47PF	5%	50V
C641	1-163-035-00	CERAMIC CHIP	0.047uF		50V
C642	1-163-035-00	CERAMIC CHIP	0.047uF		50V
C644	1-163-115-00	CERAMIC CHIP	82PF	5%	50V
C645	1-163-245-11	CERAMIC CHIP	56PF	5%	50V
C646	1-163-119-00	CERAMIC CHIP	120PF	5%	50V
C647	1-163-117-00	CERAMIC CHIP	100PF	5%	50V
C648	1-163-117-00	CERAMIC CHIP	100PF	5%	50V
C649	1-163-105-00	CERAMIC CHIP	33PF	5%	50V
C650	1-163-109-00	CERAMIC CHIP	47PF	5%	50V
C651	1-163-109-00	CERAMIC CHIP	47PF	5%	50V
C652	1-135-161-21	TANTALUM CHIP	22uF	10%	6.3V
C653	1-163-035-00	CERAMIC CHIP	0.047uF		50V
C654	1-163-117-00	CERAMIC CHIP	100PF	5%	50V
C655	1-163-113-00	CERAMIC CHIP	68PF	5%	50V
C656	1-163-133-00	CERAMIC CHIP	470PF	5%	50V
C657	1-163-133-00	CERAMIC CHIP	470PF	5%	50V
C658	1-163-141-00	CERAMIC CHIP	0.001uF	5%	50V
C659	1-163-111-00	CERAMIC CHIP	56PF	5%	50V
C660	1-163-145-00	CERAMIC CHIP	0.0015uF	5%	50V
C661	1-163-235-11	CERAMIC CHIP	22PF	5%	50V
C662	1-163-035-00	CERAMIC CHIP	0.047uF		50V
C663	1-163-129-00	CERAMIC CHIP	330PF	5%	50V
C664	1-163-129-00	CERAMIC CHIP	330PF	5%	50V
C701	1-163-035-00	CERAMIC CHIP	0.047uF		50V
C702	1-163-035-00	CERAMIC CHIP	0.047uF		50V
C703	1-163-035-00	CERAMIC CHIP	0.047uF		50V
C704	1-135-157-21	TANTALUM CHIP	10uF	20%	6.3V
C705	1-163-035-00	CERAMIC CHIP	0.047uF		50V
C706	1-163-105-00	CERAMIC CHIP	33PF	5%	50V
C707	1-163-105-00	CERAMIC CHIP	33PF	5%	50V
C708	1-135-161-21	TANTALUM CHIP	22uF	10%	6.3V
C709	1-163-035-00	CERAMIC CHIP	0.047uF		50V
C710	1-135-091-00	TANTALUM CHIP	1uF	20%	16V
C711	1-163-125-00	CERAMIC CHIP	220PF	5%	50V
C712	1-163-127-00	CERAMIC CHIP	270PF	5%	50V
C713	1-135-097-21	TANTALUM CHIP	15uF	10%	10V
C714	1-135-097-21	TANTALUM CHIP	15uF	10%	10V
C715	1-163-037-11	CERAMIC CHIP	0.022uF	10%	25V
C716	1-135-161-21	TANTALUM CHIP	22uF	10%	6.3V
C717	1-135-156-21	TANTALUM CHIP	6.8uF	10%	6.3V
C718	1-163-035-00	CERAMIC CHIP	0.047uF		50V
C719	1-135-148-21	TANTALUM CHIP	1.5uF	20%	10V
C721	1-124-584-00	ELECT	100uF	20%	10V
C722	1-163-035-00	CERAMIC CHIP	0.047uF		50V
C724	1-163-235-11	CERAMIC CHIP	22PF	5%	50V
C801	1-163-035-00	CERAMIC CHIP	0.047uF		50V
C802	1-163-035-00	CERAMIC CHIP	0.047uF		50V
C803	1-163-035-00	CERAMIC CHIP	0.047uF		50V
C804	1-135-157-21	TANTALUM CHIP	10uF	20%	6.3V
C805	1-163-035-00	CERAMIC CHIP	0.047uF		50V
C806	1-163-105-00	CERAMIC CHIP	33PF	5%	50V
C807	1-163-105-00	CERAMIC CHIP	33PF	5%	50V
C808	1-135-161-21	TANTALUM CHIP	22uF	10%	6.3V
C809	1-163-035-00	CERAMIC CHIP	0.047uF		50V
C810	1-135-091-00	TANTALUM CHIP	1uF	20%	16V

HK-4

Ref. No.	Part No.	Description			Remark
C811	1-163-125-00	CERAMIC CHIP	220PF	5%	50V
C812	1-163-127-00	CERAMIC CHIP	270PF	5%	50V
C813	1-163-133-00	CERAMIC CHIP	470PF	5%	50V
C814	1-135-097-21	TANTALUM CHIP	15uF	10%	10V
C815	1-163-037-11	CERAMIC CHIP	0.022uF	10%	25V
C816	1-135-161-21	TANTALUM CHIP	22uF	10%	6.3V
C817	1-135-156-21	TANTALUM CHIP	6.8uF	10%	6.3V
C818	1-163-035-00	CERAMIC CHIP	0.047uF		50V
C819	1-135-148-21	TANTALUM CHIP	1.5uF	20%	10V
C820	1-135-166-21	TANTALUM CHIP	47uF	10%	10V
C821	1-124-584-00	ELECT	100uF	20%	10V
C822	1-163-035-00	CERAMIC CHIP	0.047uF		50V
C824	1-163-235-11	CERAMIC CHIP	22PF	5%	50V
C825	1-163-099-00	CERAMIC CHIP	18PF	5%	50V
C826	1-163-035-00	CERAMIC CHIP	0.047uF		50V
C851	1-135-161-21	TANTALUM CHIP	22uF	10%	6.3V
C852	1-163-035-00	CERAMIC CHIP	0.047uF		50V
C853	1-163-035-00	CERAMIC CHIP	0.047uF		50V
C854	1-163-125-00	CERAMIC CHIP	220PF	5%	50V
C855	1-163-035-00	CERAMIC CHIP	0.047uF		50V
C856	1-163-035-00	CERAMIC CHIP	0.047uF		50V
C857	1-135-155-21	TANTALUM CHIP	4.7uF	10%	10V
C858	1-163-141-00	CERAMIC CHIP	0.001uF	5%	50V
C859	1-163-035-00	CERAMIC CHIP	0.047uF		50V
C860	1-163-093-00	CERAMIC CHIP	10PF	5%	50V
C901	1-163-035-00	CERAMIC CHIP	0.047uF		50V
C902	1-163-035-00	CERAMIC CHIP	0.047uF		50V
C903	1-163-035-00	CERAMIC CHIP	0.047uF		50V
C904	1-163-035-00	CERAMIC CHIP	0.047uF		50V
C905	1-135-156-21	TANTALUM CHIP	6.8uF	10%	6.3V
C906	1-163-035-00	CERAMIC CHIP	0.047uF		50V
C907	1-135-166-21	TANTALUM CHIP	47uF	10%	10V
C908	1-163-035-00	CERAMIC CHIP	0.047uF		50V
		〈 CERAMIC FILTER 〉			
CF601	1-567-306-11	RESONATOR, CERAMIC			
CF851	1-567-390-11	FILTER, CERAMIC	10.7M		
		〈 CONNECTOR 〉			
CN101	1-566-943-11	CONNECTOR, BOARD TO BOARD 18P			
CN102	1-566-943-11	CONNECTOR, BOARD TO BOARD 18P			
CN911	1-506-470-11	CONNECTOR 5P, MALE			
CN912	1-506-472-11	CONNECTOR 7P, MALE			
CN914	1-506-471-11	CONNECTOR 6P, MALE			
		〈 CAP TRIMMER 〉			
CV601	1-141-311-11	CAP, TRIMMER 20PF			
		〈 DIODE 〉			
D101	8-719-400-18	DIODE MA152WK			
D102	8-719-400-18	DIODE MA152WK			
D105	8-719-800-76	DIODE 1SS226			
D106	8-719-400-18	DIODE MA152WK			
D107	8-719-400-18	DIODE MA152WK			
D108	8-719-400-18	DIODE MA152WK			
D109	8-719-400-18	DIODE MA152WK			
D301	8-719-400-18	DIODE MA152WK			
D302	8-719-400-18	DIODE MA152WK			
D401	8-719-400-18	DIODE MA152WK			
D402	8-719-400-18	DIODE MA152WK			
D403	8-719-400-18	DIODE MA152WK			
D404	8-719-400-18	DIODE MA152WK			
D405	8-719-400-18	DIODE MA152WK			
D501	8-719-400-18	DIODE MA152WK			
D701	8-719-104-34	DIODE 1S2836			
D702	8-719-400-18	DIODE 1S2837			
D801	8-719-400-18	DIODE 1S2837			
D802	8-719-400-18	DIODE 1S2837			
D803	8-719-104-34	DIODE 1S2836			
D901	8-719-400-18	DIODE MA152WK			
		〈 DELAY LINE 〉			
DL501	1-415-611-11	DELAY LINE, GLASS (3.58MHz/10.7MHz)			
		〈 FILTER 〉			
FL301	1-236-370-11	LPF, DEMOD (Y)			
FL401	1-415-647-11	DELAY LINE, LC (250nS)			
		〈 IC 〉			
IC101	8-759-233-94	IC TA8607F			
IC102	8-759-925-60	IC BA401			
IC299	8-759-239-58	IC TC74HC221AF			
IC301	8-752-002-XX	IC CX20030			

Ref. No.	Part No.	Description	Remark
IC401	8-752-031-01	IC CXA1047M	
IC501	8-752-003-12	IC CX20031	
IC601	8-752-202-10	IC CX22021	
IC602	8-752-003-22	IC CX20032	
IC603	8-759-914-56	IC CX23054	
IC701	8-752-322-24	IC CXL1008M	
IC801	8-752-322-24	IC CXL1008M	
IC851	8-759-710-05	IC NJM2238M	
IC901	8-759-925-74	IC TC74HC04AF	
IC902	8-759-925-74	IC TC74HC04AF	
		(COIL)	
L101	1-408-974-21	INDUCTOR CHIP 22uH	
L102	1-410-167-41	INDUCTOR CHIP 820uH	
L103	1-408-792-00	INDUCTOR CHIP 180uH	
L104	1-408-775-21	INDUCTOR CHIP 6.8uH	
L105	1-408-770-11	INDUCTOR CHIP 2.7uH	
L106	1-408-775-21	INDUCTOR CHIP 6.8uH	
L107	1-408-775-21	INDUCTOR CHIP 6.8uH	
L108	1-408-780-21	INDUCTOR CHIP 18uH	
L111	1-408-797-11	INDUCTOR CHIP 470uH	
L112	1-408-797-11	INDUCTOR CHIP 470uH	
L113	1-408-777-00	INDUCTOR CHIP 10uH	
L114	1-408-779-31	INDUCTOR CHIP 15uH	
L115	1-408-780-21	INDUCTOR CHIP 18uH	
L201	1-407-169-XX	INDUCTOR CHIP 100uH	
L202	1-408-795-21	INDUCTOR CHIP 330uH	
L203	1-408-784-11	INDUCTOR CHIP 39uH	
L204	1-408-782-11	INDUCTOR CHIP 27uH	
L205	1-408-776-00	INDUCTOR CHIP 8.2uH	
L301	1-408-790-00	INDUCTOR CHIP 120uH	
L302	1-408-789-21	INDUCTOR CHIP 100uH	
L303	1-408-780-21	INDUCTOR CHIP 18uH	
L305	1-408-779-31	INDUCTOR CHIP 15uH	
L306	1-408-782-11	INDUCTOR CHIP 27uH	
L307	1-408-779-31	INDUCTOR CHIP 15uH	
L308	1-408-783-00	INDUCTOR CHIP 33uH	
L309	1-408-777-00	INDUCTOR CHIP 10uH	
L310	1-407-169-XX	INDUCTOR CHIP 100uH	
L312	1-408-781-00	INDUCTOR CHIP 22uH	
L401	1-408-782-11	INDUCTOR CHIP 27uH	
L402	1-408-970-21	INDUCTOR CHIP 10uH	

Ref. No.	Part No.	Description	Remark
L501	1-408-984-21	INDUCTOR CHIP 150uH	
L502	1-408-785-21	INDUCTOR CHIP 47uH	
L503	1-408-767-21	INDUCTOR CHIP 1.5uH	
L504	1-408-767-21	INDUCTOR CHIP 1.5uH	
L505	1-408-779-31	INDUCTOR CHIP 15uH	
L601	1-407-169-XX	INDUCTOR CHIP 100uH	
L602	1-408-792-00	INDUCTOR CHIP 180uH	
L603	1-408-783-00	INDUCTOR CHIP 33uH	
L604	1-408-789-21	INDUCTOR CHIP 100uH	
L605	1-408-790-00	INDUCTOR CHIP 120uH	
L606	1-408-793-21	INDUCTOR CHIP 220uH	
L701	1-407-169-XX	INDUCTOR CHIP 100uH	
L702	1-408-787-00	INDUCTOR CHIP 68uH	
L703	1-408-777-00	INDUCTOR CHIP 10uH	
L704	1-407-169-XX	INDUCTOR CHIP 100uH	
L705	1-408-789-21	INDUCTOR CHIP 100uH	
L706	1-408-789-21	INDUCTOR CHIP 100uH	
L801	1-407-169-XX	INDUCTOR CHIP 100uH	
L802	1-408-787-00	INDUCTOR CHIP 68uH	
L803	1-408-777-00	INDUCTOR CHIP 10uH	
L804	1-407-169-XX	INDUCTOR CHIP 100uH	
L805	1-408-781-00	INDUCTOR CHIP 22uH	
L851	1-407-169-XX	INDUCTOR CHIP 100uH	
L852	1-408-777-00	INDUCTOR CHIP 10uH	
		(COIL VARIABLE)	
LV501	1-459-547-11	COIL, VARIABLE 15uH	
		(TRANSISTOR)	
Q101	8-729-102-07	TRANSISTOR 2SC2223	
Q102	8-729-901-04	TRANSISTOR DTA114EK	
Q103	8-729-102-07	TRANSISTOR 2SC2223	
Q104	8-729-901-01	TRANSISTOR DTC144EK	
Q105	8-729-904-07	TRANSISTOR FMG2-T-148	
Q107	8-729-100-66	TRANSISTOR 2SC1623	
Q110	8-729-901-01	TRANSISTOR DTC144EK	
Q111	8-729-102-07	TRANSISTOR 2SC2223	
Q112	8-729-901-01	TRANSISTOR DTC144EK	
Q113	8-729-102-07	TRANSISTOR 2SC2223	
Q116	8-729-102-07	TRANSISTOR 2SC2223	
Q117	8-729-102-07	TRANSISTOR 2SC2223	
Q118	8-729-102-07	TRANSISTOR 2SC2223	

HK-4

Ref. No.	Part No.	Description	Remark
Q119	8-729-102-07	TRANSISTOR 2SC2223	
Q120	8-729-102-07	TRANSISTOR 2SC2223	
Q121	8-729-100-66	TRANSISTOR 2SC1623	
Q122	8-729-901-01	TRANSISTOR DTC144EK	
Q123	8-729-901-01	TRANSISTOR DTC144EK	
Q124	8-729-901-06	TRANSISTOR DTA144EK	
Q125	8-729-901-01	TRANSISTOR DTC144EK	
Q126	8-729-100-66	TRANSISTOR 2SC1623	
Q127	8-729-100-66	TRANSISTOR 2SC1623	
Q128	8-729-102-07	TRANSISTOR 2SC2223	
Q129	8-729-100-66	TRANSISTOR 2SC1623	
Q130	8-729-907-26	TRANSISTOR IMX1	
Q131	8-729-320-17	TRANSISTOR 2SA1122CD	
Q132	8-729-202-38	TRANSISTOR 2SC3326N	
Q181	8-729-907-46	TRANSISTOR IMZ1	
Q182	8-729-903-10	TRANSISTOR FMW1	
Q184	8-729-320-17	TRANSISTOR 2SA1122CD	
Q201	8-729-102-07	TRANSISTOR 2SC2223	
Q202	8-729-202-38	TRANSISTOR 2SC3326N	
Q203	8-729-202-38	TRANSISTOR 2SC3326N	
Q204	8-729-904-07	TRANSISTOR FMG2	
Q206	8-729-122-63	TRANSISTOR 2SA1226	
Q207	8-729-202-38	TRANSISTOR 2SC3326N	
Q208	8-729-201-27	TRANSISTOR 2SC2715	
Q209	8-729-201-27	TRANSISTOR 2SC2715	
Q210	8-729-102-07	TRANSISTOR 2SC2223	
Q211	8-729-102-07	TRANSISTOR 2SC2223	
Q212	8-729-901-01	TRANSISTOR DTC144EK	
Q213	8-729-901-06	TRANSISTOR DTA144EK	
Q214	8-729-102-07	TRANSISTOR 2SC2223	
Q215	8-729-902-96	TRANSISTOR FMS1	
Q217	8-729-102-07	TRANSISTOR 2SC2223	
Q218	8-729-102-07	TRANSISTOR 2SC2223	
Q219	8-729-901-01	TRANSISTOR DTC144EK	
Q299	8-729-901-06	TRANSISTOR DTA144EK	
Q301	8-729-100-66	TRANSISTOR 2SC1623	
Q302	8-729-100-66	TRANSISTOR 2SC1623	
Q305	8-729-100-66	TRANSISTOR 2SC1623	
Q306	8-729-100-66	TRANSISTOR 2SC1623	
Q307	8-729-100-66	TRANSISTOR 2SC1623	
Q309	8-729-100-66	TRANSISTOR 2SC1623	
Q310	8-729-100-66	TRANSISTOR 2SC1623	
Q311	8-729-100-66	TRANSISTOR 2SC1623	
Q312	8-729-901-06	TRANSISTOR DTA144EK	
Q313	8-729-320-17	TRANSISTOR 2SA1122CD	
Q314	8-729-100-66	TRANSISTOR 2SC1623	
Q315	8-729-100-66	TRANSISTOR 2SC1623	
Q316	8-729-901-01	TRANSISTOR DTC144EK	
Q317	8-729-100-66	TRANSISTOR 2SC1623	
Q318	8-729-901-06	TRANSISTOR DTA144EK	
Q319	8-729-100-66	TRANSISTOR 2SC1623	
Q320	8-729-901-01	TRANSISTOR DTC144EK	
Q321	8-729-901-01	TRANSISTOR DTC144EK	
Q322	8-729-320-17	TRANSISTOR 2SA1122CD	
Q323	8-729-901-01	TRANSISTOR DTC144EK	
Q324	8-729-901-01	TRANSISTOR DTC144EK	
Q325	8-729-901-06	TRANSISTOR DTA144EK	
Q326	8-729-901-06	TRANSISTOR DTA144EK	
Q328	8-729-100-66	TRANSISTOR 2SC1623	
Q401	8-729-100-66	TRANSISTOR 2SC1623	
Q402	8-729-100-66	TRANSISTOR 2SC1623	
Q403	8-729-901-01	TRANSISTOR DTC144EK	
Q404	8-729-901-01	TRANSISTOR DTC144EK	
Q405	8-729-901-06	TRANSISTOR DTA144EK	
Q406	8-729-100-66	TRANSISTOR 2SC1623	
Q407	8-729-320-17	TRANSISTOR 2SA1122CD	
Q408	8-729-320-17	TRANSISTOR 2SA1122CD	
Q409	8-729-100-66	TRANSISTOR 2SC1623	
Q410	8-729-320-17	TRANSISTOR 2SA1122CD	
Q411	8-729-901-01	TRANSISTOR DTC144EK	
Q412	8-729-901-01	TRANSISTOR DTC144EK	
Q413	8-729-901-01	TRANSISTOR DTC144EK	
Q414	8-729-100-66	TRANSISTOR 2SC1623	
Q415	8-729-320-17	TRANSISTOR 2SA1122CD	
Q416	8-729-320-17	TRANSISTOR 2SA1122CD	
Q417	8-729-901-01	TRANSISTOR DTC144EK	
Q418	8-729-100-66	TRANSISTOR 2SC1623	
Q419	8-729-100-66	TRANSISTOR 2SC1623	
Q420	8-729-202-38	TRANSISTOR 2SC3326N	
Q421	8-729-202-38	TRANSISTOR 2SC3326N	
Q422	8-729-100-66	TRANSISTOR 2SC1623	
Q423	8-729-100-66	TRANSISTOR 2SC1623	
Q424	8-729-901-01	TRANSISTOR DTC144EK	
Q425	8-729-100-66	TRANSISTOR 2SC1623	

Ref. No.	Part No.	Description	Remark
Q426	8-729-100-66	TRANSISTOR 2SC1623	
Q427	8-729-320-17	TRANSISTOR 2SA1122CD	
Q428	8-729-320-17	TRANSISTOR 2SA1122CD	
Q429	8-729-901-01	TRANSISTOR DTC144EK	
Q430	8-729-901-01	TRANSISTOR DTC144EK	
Q431	8-729-320-17	TRANSISTOR 2SA1122CD	
Q501	8-729-901-06	TRANSISTOR DTA144EK	
Q502	8-729-901-01	TRANSISTOR DTC144EK	
Q503	8-729-901-00	TRANSISTOR DTC124EK	
Q601	8-729-901-01	TRANSISTOR DTC144EK	
Q603	8-729-901-01	TRANSISTOR DTC144EK	
Q604	8-729-100-66	TRANSISTOR 2SC1623	
Q605	8-729-100-66	TRANSISTOR 2SC1623	
Q606	8-729-901-01	TRANSISTOR DTC144EK	
Q607	8-729-100-66	TRANSISTOR 2SC1623	
Q608	8-729-320-17	TRANSISTOR 2SA1122CD	
Q701	8-729-901-01	TRANSISTOR DTC144EK	
Q702	8-729-216-22	TRANSISTOR 2SA1162	
Q703	8-729-216-22	TRANSISTOR 2SA1162	
Q704	8-729-216-22	TRANSISTOR 2SA1162	
Q705	8-729-320-17	TRANSISTOR 2SA1122CD	
Q706	8-729-901-01	TRANSISTOR DTC144EK	
Q707	8-729-901-01	TRANSISTOR DTC144EK	
Q708	8-729-216-22	TRANSISTOR 2SA1162	
Q709	8-729-216-22	TRANSISTOR 2SA1162	
Q710	8-729-320-17	TRANSISTOR 2SA1122CD	
Q801	8-729-901-01	TRANSISTOR DTC144EK	
Q802	8-729-320-17	TRANSISTOR 2SA1122CD	
Q803	8-729-216-22	TRANSISTOR 2SA1162	
Q804	8-729-216-22	TRANSISTOR 2SA1162	
Q805	8-729-216-22	TRANSISTOR 2SA1162	
Q806	8-729-320-17	TRANSISTOR 2SA1122CD	
Q807	8-729-901-01	TRANSISTOR DTC144EK	
Q808	8-729-216-22	TRANSISTOR 2SA1162	
Q809	8-729-216-22	TRANSISTOR 2SA1162	
Q810	8-729-320-17	TRANSISTOR 2SA1122CD	
Q811	8-729-901-01	TRANSISTOR DTC144EK	
Q851	8-729-100-66	TRANSISTOR 2SC1623	
Q852	8-729-100-66	TRANSISTOR 2SC1623	
Q901	8-729-901-00	TRANSISTOR DTC124EK	
Q902	8-729-901-01	TRANSISTOR DTC144EK	
Q903	8-729-104-25	TRANSISTOR 2SB804-AV	

Ref. No.	Part No.	Description			Remark
Q904	8-729-100-66	TRANSISTOR 2SC1623			
		〈 RESISTOR 〉			
R101	1-216-049-00	METAL CHIP	1K	5% 1/10W	
R102	1-216-029-00	METAL CHIP	150	5% 1/10W	
R103	1-216-073-00	METAL CHIP	10K	5% 1/10W	
R104	1-216-073-00	METAL CHIP	10K	5% 1/10W	
R105	1-216-069-00	METAL CHIP	6.8K	5% 1/10W	
R106	1-216-041-00	METAL CHIP	470	5% 1/10W	
R107	1-216-035-00	METAL CHIP	270	5% 1/10W	
R108	1-216-043-00	METAL CHIP	560	5% 1/10W	
R109	1-216-081-00	METAL CHIP	22K	5% 1/10W	
R110	1-216-081-00	METAL CHIP	22K	5% 1/10W	
R111	1-216-045-00	METAL CHIP	680	5% 1/10W	
R112	1-216-041-00	METAL CHIP	470	5% 1/10W	
R113	1-216-041-00	METAL CHIP	470	5% 1/10W	
R115	1-216-043-00	METAL CHIP	560	5% 1/10W	
R116	1-216-033-00	METAL CHIP	220	5% 1/10W	
R117	1-216-057-00	METAL CHIP	2.2K	5% 1/10W	
R119	1-216-073-00	METAL CHIP	10K	5% 1/10W	
R120	1-216-073-00	METAL CHIP	10K	5% 1/10W	
R121	1-216-093-00	METAL CHIP	68K	5% 1/10W	
R122	1-216-073-00	METAL CHIP	10K	5% 1/10W	
R124	1-216-049-00	METAL CHIP	1K	5% 1/10W	
R125	1-216-073-00	METAL CHIP	10K	5% 1/10W	
R126	1-216-073-00	METAL CHIP	10K	5% 1/10W	
R127	1-216-049-00	METAL CHIP	1K	5% 1/10W	
R128	1-216-041-00	METAL CHIP	470	5% 1/10W	
R130	1-216-033-00	METAL CHIP	220	5% 1/10W	
R131	1-216-065-00	METAL CHIP	4.7K	5% 1/10W	
R132	1-216-073-00	METAL CHIP	10K	5% 1/10W	
R133	1-216-057-00	METAL CHIP	2.2K	5% 1/10W	
R137	1-216-033-00	METAL CHIP	220	5% 1/10W	
R139	1-216-295-00	METAL CHIP	0	5% 1/10W	
R140	1-216-053-00	METAL CHIP	1.5K	5% 1/10W	
R141	1-216-075-00	METAL CHIP	12K	5% 1/10W	
R142	1-216-748-11	METAL CHIP	39K	5% 1/10W	
R143	1-216-049-00	METAL CHIP	1K	5% 1/10W	
R144	1-216-043-00	METAL CHIP	560	5% 1/10W	
R145	1-216-037-00	METAL CHIP	330	5% 1/10W	
R146	1-216-035-00	METAL CHIP	270	5% 1/10W	
R147	1-216-081-00	METAL CHIP	22K	5% 1/10W	

HK-4

Ref. No.	Part No.	Description				Remark
R148	1-216-081-00	METAL CHIP	22K	5%	1/10W	
R149	1-216-049-00	METAL CHIP	1K	5%	1/10W	
R150	1-216-047-00	METAL CHIP	820	5%	1/10W	
R151	1-216-049-00	METAL CHIP	1K	5%	1/10W	
R153	1-216-073-00	METAL CHIP	10K	5%	1/10W	
R154	1-216-073-00	METAL CHIP	10K	5%	1/10W	
R155	1-216-049-00	METAL CHIP	1K	5%	1/10W	
R156	1-216-295-00	METAL CHIP	0	5%	1/10W	
R157	1-216-069-00	METAL CHIP	6.8K	5%	1/10W	
R158	1-216-083-00	METAL CHIP	27K	5%	1/10W	
R159	1-216-025-00	METAL CHIP	100	5%	1/10W	
R160	1-216-045-00	METAL CHIP	680	5%	1/10W	
R161	1-216-295-00	METAL CHIP	0	5%	1/10W	
R162	1-216-045-00	METAL CHIP	680	5%	1/10W	
R163	1-216-073-00	METAL CHIP	10K	5%	1/10W	
R164	1-216-073-00	METAL CHIP	10K	5%	1/10W	
R165	1-216-069-00	METAL CHIP	6.8K	5%	1/10W	
R166	1-216-061-00	METAL CHIP	3.3K	5%	1/10W	
R167	1-216-041-00	METAL CHIP	470	5%	1/10W	
R168	1-216-073-00	METAL CHIP	10K	5%	1/10W	
R169	1-216-049-00	METAL CHIP	1K	5%	1/10W	
R170	1-216-097-00	METAL CHIP	100K	5%	1/10W	
R171	1-216-748-11	METAL CHIP	39K	5%	1/10W	
R173	1-216-097-00	METAL CHIP	100K	5%	1/10W	
R174	1-216-748-11	METAL CHIP	39K	5%	1/10W	
R175	1-216-097-00	METAL CHIP	100K	5%	1/10W	
R176	1-216-073-00	METAL CHIP	10K	5%	1/10W	
R177	1-216-081-00	METAL CHIP	22K	5%	1/10W	
R178	1-216-077-00	METAL CHIP	15K	5%	1/10W	
R179	1-216-075-00	METAL CHIP	12K	5%	1/10W	
R180	1-216-041-00	METAL CHIP	470	5%	1/10W	
R181	1-216-085-00	METAL CHIP	33K	5%	1/10W	
R182	1-216-073-00	METAL CHIP	10K	5%	1/10W	
R183	1-216-067-00	METAL CHIP	5.6K	5%	1/10W	
R184	1-216-055-00	METAL CHIP	1.8K	5%	1/10W	
R185	1-216-073-00	METAL CHIP	10K	5%	1/10W	
R186	1-216-065-00	METAL CHIP	4.7K	5%	1/10W	
R187	1-216-081-00	METAL CHIP	22K	5%	1/10W	
R188	1-216-065-00	METAL CHIP	4.7K	5%	1/10W	
R190	1-216-065-00	METAL CHIP	4.7K	5%	1/10W	
R191	1-216-071-00	METAL CHIP	8.2K	5%	1/10W	
R192	1-216-037-00	METAL CHIP	330	5%	1/10W	
R193	1-216-057-00	METAL CHIP	2.2K	5%	1/10W	
R194	1-216-295-00	METAL CHIP	0	5%	1/10W	
R195	1-216-041-00	METAL CHIP	470	5%	1/10W	
R196	1-216-649-11	METAL CHIP	820	0.5%	1/10W	
R197	1-218-142-11	METAL GLAZE	470	1%	1/10W	
R198	1-216-089-00	METAL CHIP	47K	5%	1/10W	
R199	1-216-089-00	METAL CHIP	47K	5%	1/10W	
R201	1-216-073-00	METAL CHIP	10K	5%	1/10W	
R202	1-216-089-00	METAL CHIP	47K	5%	1/10W	
R203	1-216-073-00	METAL CHIP	10K	5%	1/10W	
R204	1-216-089-00	METAL CHIP	47K	5%	1/10W	
R205	1-216-049-00	METAL CHIP	1K	5%	1/10W	
R206	1-216-043-00	METAL CHIP	560	5%	1/10W	
R210	1-216-053-00	METAL CHIP	1.5K	5%	1/10W	
R211	1-216-049-00	METAL CHIP	1K	5%	1/10W	
R212	1-216-071-00	METAL CHIP	8.2K	5%	1/10W	
R215	1-216-049-00	METAL CHIP	1K	5%	1/10W	
R216	1-216-081-00	METAL CHIP	22K	5%	1/10W	
R217	1-216-081-00	METAL CHIP	22K	5%	1/10W	
R218	1-216-041-00	METAL CHIP	470	5%	1/10W	
R219	1-216-051-00	METAL CHIP	1.2K	5%	1/10W	
R220	1-216-041-00	METAL CHIP	470	5%	1/10W	
R221	1-216-041-00	METAL CHIP	470	5%	1/10W	
R222	1-216-295-00	METAL CHIP	0	5%	1/10W	
R223	1-216-041-00	METAL CHIP	470	5%	1/10W	
R224	1-216-041-00	METAL CHIP	470	5%	1/10W	
R225	1-216-065-00	METAL CHIP	4.7K	5%	1/10W	
R226	1-216-081-00	METAL CHIP	22K	5%	1/10W	
R227	1-216-083-00	METAL CHIP	27K	5%	1/10W	
R228	1-216-053-00	METAL CHIP	1.5K	5%	1/10W	
R229	1-216-049-00	METAL CHIP	1K	5%	1/10W	
R230	1-216-047-00	METAL CHIP	820	5%	1/10W	
R231	1-216-069-00	METAL CHIP	6.8K	5%	1/10W	
R232	1-216-737-11	METAL GLAZE	1K	1%	1/10W	
R233	1-216-602-11	METAL GLAZE	6.8K	1%	1/10W	
R234	1-216-033-00	METAL CHIP	220	5%	1/10W	
R235	1-216-057-00	METAL CHIP	2.2K	5%	1/10W	
R236	1-216-089-00	METAL CHIP	47K	5%	1/10W	
R237	1-216-089-00	METAL CHIP	47K	5%	1/10W	
R238	1-216-053-00	METAL CHIP	1.5K	5%	1/10W	
R239	1-216-089-00	METAL CHIP	47K	5%	1/10W	

Ref. No.	Part No.	Description				Remark
R240	1-216-089-00	METAL CHIP	47K	5%	1/10W	
R241	1-216-041-00	METAL CHIP	470	5%	1/10W	
R242	1-216-295-00	METAL CHIP	0	5%	1/10W	
R243	1-216-041-00	METAL CHIP	470	5%	1/10W	
R244	1-216-065-00	METAL CHIP	4.7K	5%	1/10W	
R245	1-216-043-00	METAL CHIP	560	5%	1/10W	
R247	1-216-041-00	METAL CHIP	470	5%	1/10W	
R251	1-216-043-00	METAL CHIP	560	5%	1/10W	
R252	1-216-033-00	METAL CHIP	220	5%	1/10W	
R253	1-216-041-00	METAL CHIP	470	5%	1/10W	
R297	1-216-081-00	METAL CHIP	22K	5%	1/10W	
R298	1-216-085-00	METAL CHIP	33K	5%	1/10W	
R299	1-216-602-11	METAL GLAZE	6.8K	1%	1/10W	
R301	1-216-049-00	METAL CHIP	1K	5%	1/10W	
R302	1-216-737-11	METAL GLAZE	1K	1%	1/10W	
R303	1-216-518-00	METAL GLAZE	2.2K	1%	1/10W	
R304	1-218-156-11	METAL GLAZE	8.2K	1%	1/10W	
R305	1-216-542-11	METAL CHIP	12K	1%	1/10W	
R306	1-216-049-00	METAL CHIP	1K	5%	1/10W	
R307	1-216-049-00	METAL CHIP	1K	5%	1/10W	
R308	1-216-295-00	METAL CHIP	0	5%	1/10W	
R309	1-216-295-00	METAL CHIP	0	5%	1/10W	
R310	1-216-033-00	METAL CHIP	220	5%	1/10W	
R311	1-216-033-00	METAL CHIP	220	5%	1/10W	
R313	1-216-034-00	METAL CHIP	240	5%	1/10W	
R314	1-216-043-00	METAL CHIP	560	5%	1/10W	
R315	1-216-057-00	METAL CHIP	2.2K	5%	1/10W	
R316	1-216-075-00	METAL CHIP	12K	5%	1/10W	
R317	1-216-071-00	METAL CHIP	8.2K	5%	1/10W	
R318	1-216-033-00	METAL CHIP	220	5%	1/10W	
R320	1-216-033-00	METAL CHIP	220	5%	1/10W	
R321	1-216-032-00	METAL CHIP	200	5%	1/10W	
R323	1-218-142-11	METAL GLAZE	470	1%	1/10W	
R324	1-216-073-00	METAL CHIP	10K	5%	1/10W	
R325	1-216-073-00	METAL CHIP	10K	5%	1/10W	
R326	1-216-033-00	METAL CHIP	220	5%	1/10W	
R327	1-216-033-00	METAL CHIP	220	5%	1/10W	
R329	1-218-150-11	METAL GLAZE	1.2K	1%	1/10W	
R330	1-216-045-00	METAL CHIP	680	5%	1/10W	
R331	1-216-043-00	METAL CHIP	560	5%	1/10W	
R332	1-218-144-11	METAL GLAZE	560	1%	1/10W	
R333	1-216-623-11	METAL CHIP	68	0.5%	1/10W	

Ref. No.	Part No.	Description				Remark
R334	1-216-073-00	METAL CHIP	10K	5%	1/10W	
R335	1-216-073-00	METAL CHIP	10K	5%	1/10W	
R336	1-216-057-00	METAL CHIP	2.2K	5%	1/10W	
R337	1-216-073-00	METAL CHIP	10K	5%	1/10W	
R338	1-216-073-00	METAL CHIP	10K	5%	1/10W	
R339	1-216-057-00	METAL CHIP	2.2K	5%	1/10W	
R340	1-218-150-11	METAL GLAZE	1.2K	1%	1/10W	
R341	1-218-140-11	METAL GLAZE	390	1%	1/10W	
R342	1-216-049-00	METAL CHIP	1K	5%	1/10W	
R343	1-216-049-00	METAL CHIP	1K	5%	1/10W	
R344	1-216-099-00	METAL CHIP	120K	5%	1/10W	
R345	1-216-113-00	METAL CHIP	470K	5%	1/10W	
R346	1-216-075-00	METAL CHIP	12K	5%	1/10W	
R347	1-216-081-00	METAL CHIP	22K	5%	1/10W	
R348	1-216-077-00	METAL CHIP	15K	5%	1/10W	
R349	1-216-085-00	METAL CHIP	33K	5%	1/10W	
R350	1-216-055-00	METAL CHIP	1.8K	5%	1/10W	
R351	1-216-077-00	METAL CHIP	15K	5%	1/10W	
R353	1-216-097-00	METAL CHIP	100K	5%	1/10W	
R354	1-216-109-00	METAL CHIP	330K	5%	1/10W	
R355	1-216-049-00	METAL CHIP	1K	5%	1/10W	
R356	1-216-081-00	METAL CHIP	22K	5%	1/10W	
R357	1-216-081-00	METAL CHIP	22K	5%	1/10W	
R358	1-216-295-00	METAL CHIP	0	5%	1/10W	
R359	1-216-049-00	METAL CHIP	1K	5%	1/10W	
R360	1-216-097-00	METAL CHIP	100K	5%	1/10W	
R362	1-216-093-00	METAL CHIP	68K	5%	1/10W	
R363	1-216-073-00	METAL CHIP	10K	5%	1/10W	
R364	1-216-097-00	METAL CHIP	100K	5%	1/10W	
R365	1-218-132-11	METAL GLAZE	4.7K	1%	1/10W	
R366	1-216-089-00	METAL CHIP	47K	5%	1/10W	
R367	1-216-091-00	METAL CHIP	56K	5%	1/10W	
R368	1-216-081-00	METAL CHIP	22K	5%	1/10W	
R369	1-216-077-00	METAL CHIP	15K	5%	1/10W	
R370	1-216-081-00	METAL CHIP	22K	5%	1/10W	
R371	1-216-295-00	METAL CHIP	0	5%	1/10W	
R373	1-216-101-00	METAL CHIP	150K	5%	1/10W	
R374	1-216-049-00	METAL CHIP	1K	5%	1/10W	
R376	1-216-057-00	METAL CHIP	2.2K	5%	1/10W	
R379	1-216-043-00	METAL CHIP	560	5%	1/10W	
R380	1-216-033-00	METAL CHIP	220	5%	1/10W	

HK-4

Ref. No.	Part No.	Description				Remark
R381	1-216-295-00	METAL CHIP	0	5%	1/10W	
R382	1-216-295-00	METAL CHIP	0	5%	1/10W	
R383	1-216-295-00	METAL CHIP	0	5%	1/10W	
R401	1-216-737-11	METAL GLAZE	1K	1%	1/10W	
R402	1-216-334-11	METAL GLAZE	22K	1%	1/10W	
R403	1-218-132-11	METAL GLAZE	4.7K	1%	1/10W	
R404	1-216-654-11	METAL CHIP	1.3K	0.5%	1/10W	
R405	1-216-057-00	METAL CHIP	2.2K	5%	1/10W	
R406	1-216-033-00	METAL CHIP	220	5%	1/10W	
R407	1-216-033-00	METAL CHIP	220	5%	1/10W	
R408	1-216-295-00	METAL CHIP	0	5%	1/10W	
R409	1-216-653-11	METAL CHIP	1.2K	0.5%	1/10W	
R411	1-216-037-00	METAL CHIP	330	5%	1/10W	
R412	1-216-073-00	METAL CHIP	10K	5%	1/10W	
R413	1-216-111-00	METAL CHIP	390K	5%	1/10W	
R414	1-216-081-00	METAL CHIP	22K	5%	1/10W	
R415	1-216-097-00	METAL CHIP	100K	5%	1/10W	
R416	1-216-077-00	METAL CHIP	15K	5%	1/10W	
R417	1-216-069-00	METAL CHIP	6.8K	5%	1/10W	
R418	1-216-041-00	METAL CHIP	470	5%	1/10W	
R419	1-216-061-00	METAL CHIP	3.3K	5%	1/10W	
R420	1-216-057-00	METAL CHIP	2.2K	5%	1/10W	
R421	1-216-061-00	METAL CHIP	3.3K	5%	1/10W	
R422	1-216-051-00	METAL CHIP	1.2K	5%	1/10W	
R423	1-216-049-00	METAL CHIP	1K	5%	1/10W	
R424	1-216-059-00	METAL CHIP	2.7K	5%	1/10W	
R425	1-216-049-00	METAL CHIP	1K	5%	1/10W	
R426	1-216-053-00	METAL CHIP	1.5K	5%	1/10W	
R427	1-216-045-00	METAL CHIP	680	5%	1/10W	
R428	1-216-748-11	METAL CHIP	39K	5%	1/10W	
R429	1-216-081-00	METAL CHIP	22K	5%	1/10W	
R430	1-216-055-00	METAL CHIP	1.8K	5%	1/10W	
R431	1-216-065-00	METAL CHIP	4.7K	5%	1/10W	
R432	1-216-081-00	METAL CHIP	22K	5%	1/10W	
R433	1-216-097-00	METAL CHIP	100K	5%	1/10W	
R434	1-216-057-00	METAL CHIP	2.2K	5%	1/10W	
R435	1-216-101-00	METAL CHIP	150K	5%	1/10W	
R436	1-216-061-00	METAL CHIP	3.3K	5%	1/10W	
R437	1-218-132-11	METAL GLAZE	4.7K	1%	1/10W	
R438	1-216-737-11	METAL GLAZE	1K	1%	1/10W	
R439	1-216-064-00	METAL CHIP	4.3K	5%	1/10W	
R440	1-216-870-11	METAL CHIP	180K	1%	1/10W	
R441	1-216-064-00	METAL CHIP	4.3K	5%	1/10W	
R442	1-216-065-00	METAL CHIP	4.7K	5%	1/10W	
R443	1-216-075-00	METAL CHIP	12K	5%	1/10W	
R444	1-216-071-00	METAL CHIP	8.2K	5%	1/10W	
R445	1-216-295-00	METAL CHIP	0	5%	1/10W	
R446	1-218-155-11	METAL GLAZE	3.9K	1%	1/10W	
R447	1-216-333-11	METAL CHIP	15K	1%	1/10W	
R448	1-216-057-00	METAL CHIP	2.2K	5%	1/10W	
R449	1-216-077-00	METAL CHIP	15K	5%	1/10W	
R450	1-216-081-00	METAL CHIP	22K	5%	1/10W	
R451	1-216-041-00	METAL CHIP	470	5%	1/10W	
R452	1-216-041-00	METAL CHIP	470	5%	1/10W	
R453	1-216-057-00	METAL CHIP	2.2K	5%	1/10W	
R454	1-216-061-00	METAL CHIP	3.3K	5%	1/10W	
R455	1-218-150-11	METAL GLAZE	1.2K	1%	1/10W	
R456	1-216-083-00	METAL CHIP	27K	5%	1/10W	
R457	1-216-081-00	METAL CHIP	22K	5%	1/10W	
R458	1-216-047-00	METAL CHIP	820	5%	1/10W	
R459	1-216-039-00	METAL CHIP	390	5%	1/10W	
R460	1-216-033-00	METAL CHIP	220	5%	1/10W	
R462	1-216-049-00	METAL CHIP	1K	5%	1/10W	
R463	1-216-073-00	METAL CHIP	10K	5%	1/10W	
R464	1-216-089-00	METAL CHIP	47K	5%	1/10W	
R465	1-216-089-00	METAL CHIP	47K	5%	1/10W	
R466	1-218-142-11	METAL GLAZE	470	1%	1/10W	
R467	1-218-140-11	METAL GLAZE	390	1%	1/10W	
R468	1-216-089-00	METAL CHIP	47K	5%	1/10W	
R469	1-216-089-00	METAL CHIP	47K	5%	1/10W	
R470	1-216-073-00	METAL CHIP	10K	5%	1/10W	
R471	1-216-057-00	METAL CHIP	2.2K	5%	1/10W	
R472	1-216-041-00	METAL CHIP	470	5%	1/10W	
R473	1-216-049-00	METAL CHIP	1K	5%	1/10W	
R474	1-216-049-00	METAL CHIP	1K	5%	1/10W	
R475	1-216-058-00	METAL GLAZE	2.4K	5%	1/10W	
R476	1-216-065-00	METAL CHIP	4.7K	5%	1/10W	
R477	1-216-041-00	METAL CHIP	470	5%	1/10W	
R478	1-216-063-00	METAL CHIP	3.9K	5%	1/10W	
R479	1-216-049-00	METAL CHIP	1K	5%	1/10W	
R480	1-216-085-00	METAL CHIP	33K	5%	1/10W	
R481	1-216-071-00	METAL CHIP	8.2K	5%	1/10W	
R482	1-216-073-00	METAL CHIP	10K	5%	1/10W	
R483	1-216-082-00	METAL GLAZE	24K	5%	1/10W	

Ref. No.	Part No.	Description				Remark
R484	1-216-075-00	METAL CHIP	12K	5%	1/10W	
R485	1-216-295-00	METAL CHIP	0	5%	1/10W	
R488	1-216-295-00	METAL CHIP	0	5%	1/10W	
R501	1-216-737-11	METAL GLAZE	1K	1%	1/10W	
R502	1-218-155-11	METAL GLAZE	3.9K	1%	1/10W	
R503	1-216-737-11	METAL GLAZE	1K	1%	1/10W	
R504	1-216-596-11	METAL GLAZE	2.7K	1%	1/10W	
R505	1-218-150-11	METAL GLAZE	1.2K	1%	1/10W	
R506	1-216-057-00	METAL CHIP	2.2K	5%	1/10W	
R507	1-216-065-00	METAL CHIP	4.7K	5%	1/10W	
R508	1-216-085-00	METAL CHIP	33K	5%	1/10W	
R509	1-216-077-00	METAL CHIP	15K	5%	1/10W	
R510	1-218-132-11	METAL GLAZE	4.7K	1%	1/10W	
R511	1-216-647-11	METAL CHIP	680	0.5%	1/10W	
R512	1-218-132-11	METAL GLAZE	4.7K	1%	1/10W	
R513	1-218-144-11	METAL GLAZE	560	1%	1/10W	
R514	1-216-542-11	METAL CHIP	12K	1%	1/10W	
R515	1-216-097-00	METAL CHIP	100K	5%	1/10W	
R516	1-216-518-00	METAL GLAZE	2.2K	1%	1/10W	
R517	1-218-140-11	METAL GLAZE	390	1%	1/10W	
R519	1-216-295-00	METAL CHIP	0	5%	1/10W	
R520	1-216-035-00	METAL CHIP	270	5%	1/10W	
R521	1-216-073-00	METAL CHIP	10K	5%	1/10W	
R522	1-216-748-11	METAL CHIP	39K	5%	1/10W	
R523	1-216-121-00	METAL CHIP	1M	5%	1/10W	
R524	1-216-117-00	METAL CHIP	680K	5%	1/10W	
R525	1-216-075-00	METAL CHIP	12K	5%	1/10W	
R526	1-216-081-00	METAL CHIP	22K	5%	1/10W	
R527	1-216-075-00	METAL CHIP	12K	5%	1/10W	
R528	1-216-083-00	METAL CHIP	27K	5%	1/10W	
R529	1-216-081-00	METAL CHIP	22K	5%	1/10W	
R530	1-216-631-11	METAL CHIP	150	0.5%	1/10W	
R531	1-216-629-11	METAL CHIP	120	0.5%	1/10W	
R532	1-216-617-11	METAL CHIP	39	1%	1/10W	
R533	1-216-083-00	METAL CHIP	27K	5%	1/10W	
R534	1-216-049-00	METAL CHIP	1K	5%	1/10W	
R535	1-216-641-11	METAL CHIP	390	0.5%	1/10W	
R536	1-216-633-11	METAL CHIP	180	0.5%	1/10W	
R537	1-216-645-11	METAL CHIP	560	0.5%	1/10W	
R538	1-216-083-00	METAL CHIP	27K	5%	1/10W	
R539	1-216-081-00	METAL CHIP	22K	5%	1/10W	

Ref. No.	Part No.	Description				Remark
R540	1-216-295-00	METAL CHIP	0	5%	1/10W	
R601	1-216-295-00	METAL CHIP	0	5%	1/10W	
R602	1-216-073-00	METAL CHIP	10K	5%	1/10W	
R603	1-216-635-11	METAL CHIP	220	0.5%	1/10W	
R604	1-216-073-00	METAL CHIP	10K	5%	1/10W	
R605	1-216-723-11	METAL GLAZE	5.6K	1%	1/10W	
R606	1-216-334-11	METAL GLAZE	22K	1%	1/10W	
R607	1-218-132-11	METAL GLAZE	4.7K	1%	1/10W	
R609	1-216-103-00	METAL CHIP	180K	5%	1/10W	
R610	1-216-295-00	METAL CHIP	0	5%	1/10W	
R612	1-216-073-00	METAL CHIP	10K	5%	1/10W	
R613	1-218-152-11	METAL GLAZE	1.5K	1%	1/10W	
R614	1-218-132-11	METAL GLAZE	4.7K	1%	1/10W	
R615	1-216-542-11	METAL CHIP	12K	1%	1/10W	
R616	1-216-061-00	METAL CHIP	3.3K	5%	1/10W	
R617	1-216-065-00	METAL CHIP	4.7K	5%	1/10W	
R619	1-216-049-00	METAL CHIP	1K	5%	1/10W	
R620	1-216-051-00	METAL CHIP	1.2K	5%	1/10W	
R621	1-216-081-00	METAL CHIP	22K	5%	1/10W	
R622	1-216-097-00	METAL CHIP	100K	5%	1/10W	
R623	1-216-295-00	METAL CHIP	0	5%	1/10W	
R624	1-216-073-00	METAL CHIP	10K	5%	1/10W	
R625	1-216-063-00	METAL CHIP	3.9K	5%	1/10W	
R626	1-216-295-00	METAL CHIP	0	5%	1/10W	
R627	1-216-081-00	METAL CHIP	22K	5%	1/10W	
R628	1-216-081-00	METAL CHIP	22K	5%	1/10W	
R629	1-218-132-11	METAL GLAZE	4.7K	1%	1/10W	
R630	1-218-155-11	METAL GLAZE	3.9K	1%	1/10W	
R631	1-216-596-11	METAL GLAZE	2.7K	1%	1/10W	
R632	1-218-144-11	METAL GLAZE	560	1%	1/10W	
R633	1-216-518-00	METAL GLAZE	2.2K	1%	1/10W	
R634	1-216-085-00	METAL CHIP	33K	5%	1/10W	
R635	1-216-085-00	METAL CHIP	33K	5%	1/10W	
R636	1-216-049-00	METAL CHIP	1K	5%	1/10W	
R637	1-216-081-00	METAL CHIP	22K	5%	1/10W	
R638	1-216-085-00	METAL CHIP	33K	5%	1/10W	
R639	1-216-057-00	METAL CHIP	2.2K	5%	1/10W	
R640	1-216-737-11	METAL GLAZE	1K	1%	1/10W	
R641	1-216-737-11	METAL GLAZE	1K	1%	1/10W	
R642	1-216-057-00	METAL CHIP	2.2K	5%	1/10W	
R644	1-216-073-00	METAL CHIP	10K	5%	1/10W	
R645	1-216-073-00	METAL CHIP	10K	5%	1/10W	

HK-4

Ref. No.	Part No.	Description				Remark
R646	1-216-097-00	METAL CHIP	100K	5%	1/10W	
R647	1-216-085-00	METAL CHIP	33K	5%	1/10W	
R648	1-216-065-00	METAL CHIP	4.7K	5%	1/10W	
R649	1-216-079-00	METAL CHIP	18K	5%	1/10W	
R650	1-216-061-00	METAL CHIP	3.3K	5%	1/10W	
R651	1-216-061-00	METAL CHIP	3.3K	5%	1/10W	
R652	1-216-065-00	METAL CHIP	4.7K	5%	1/10W	
R653	1-216-061-00	METAL CHIP	3.3K	5%	1/10W	
R654	1-216-061-00	METAL CHIP	3.3K	5%	1/10W	
R655	1-216-049-00	METAL CHIP	1K	5%	1/10W	
R656	1-216-049-00	METAL CHIP	1K	5%	1/10W	
R657	1-216-085-00	METAL CHIP	33K	5%	1/10W	
R658	1-216-039-00	METAL CHIP	390	5%	1/10W	
R659	1-216-121-00	METAL CHIP	1M	5%	1/10W	
R660	1-216-115-00	METAL CHIP	560K	5%	1/10W	
R661	1-216-081-00	METAL CHIP	22K	5%	1/10W	
R662	1-216-542-11	METAL CHIP	12K	1%	1/10W	
R663	1-218-132-11	METAL GLAZE	4.7K	1%	1/10W	
R664	1-218-152-11	METAL GLAZE	1.5K	1%	1/10W	
R701	1-216-073-00	METAL CHIP	10K	5%	1/10W	
R702	1-216-105-00	METAL CHIP	220K	5%	1/10W	
R703	1-216-129-00	METAL CHIP	2.2M	5%	1/10W	
R704	1-216-737-11	METAL GLAZE	1K	1%	1/10W	
R705	1-216-129-00	METAL CHIP	2.2M	5%	1/10W	
R706	1-216-737-11	METAL GLAZE	1K	1%	1/10W	
R707	1-216-113-00	METAL CHIP	470K	5%	1/10W	
R708	1-216-105-00	METAL CHIP	220K	5%	1/10W	
R709	1-216-089-00	METAL CHIP	47K	5%	1/10W	
R710	1-216-105-00	METAL CHIP	220K	5%	1/10W	
R711	1-216-629-11	METAL CHIP	120	0.5%	1/10W	
R712	1-216-737-11	METAL GLAZE	1K	1%	1/10W	
R713	1-218-132-11	METAL GLAZE	4.7K	1%	1/10W	
R714	1-216-324-11	METAL GLAZE	10K	1%	1/10W	
R715	1-216-039-00	METAL CHIP	390	5%	1/10W	
R716	1-216-033-00	METAL CHIP	220	5%	1/10W	
R717	1-216-039-00	METAL CHIP	390	5%	1/10W	
R718	1-216-039-00	METAL CHIP	390	5%	1/10W	
R719	1-216-071-00	METAL CHIP	8.2K	5%	1/10W	
R720	1-216-079-00	METAL CHIP	18K	5%	1/10W	
R721	1-216-055-00	METAL CHIP	1.8K	5%	1/10W	
R722	1-216-121-00	METAL CHIP	1M	5%	1/10W	
R723	1-216-073-00	METAL CHIP	10K	5%	1/10W	
R724	1-216-057-00	METAL CHIP	2.2K	5%	1/10W	
R725	1-216-089-00	METAL CHIP	47K	5%	1/10W	
R726	1-216-025-00	METAL CHIP	100	5%	1/10W	
R727	1-216-041-00	METAL CHIP	470	5%	1/10W	
R728	1-216-039-00	METAL CHIP	390	5%	1/10W	
R729	1-216-295-00	METAL CHIP	0	5%	1/10W	
R730	1-216-049-00	METAL CHIP	1K	5%	1/10W	
R731	1-216-047-00	METAL CHIP	820	5%	1/10W	
R732	1-216-055-00	METAL CHIP	1.8K	5%	1/10W	
R733	1-216-057-00	METAL CHIP	2.2K	5%	1/10W	
R734	1-216-049-00	METAL CHIP	1K	5%	1/10W	
R735	1-216-295-00	METAL CHIP	0	5%	1/10W	
R736	1-216-049-00	METAL CHIP	1K	5%	1/10W	
R801	1-216-073-00	METAL CHIP	10K	5%	1/10W	
R802	1-216-105-00	METAL CHIP	220K	5%	1/10W	
R803	1-216-081-00	METAL CHIP	22K	5%	1/10W	
R804	1-216-737-11	METAL GLAZE	1K	1%	1/10W	
R805	1-216-081-00	METAL CHIP	22K	5%	1/10W	
R806	1-216-737-11	METAL GLAZE	1K	1%	1/10W	
R807	1-216-081-00	METAL CHIP	22K	5%	1/10W	
R808	1-216-073-00	METAL CHIP	10K	5%	1/10W	
R809	1-216-105-00	METAL CHIP	220K	5%	1/10W	
R810	1-216-089-00	METAL CHIP	47K	5%	1/10W	
R811	1-216-629-11	METAL CHIP	120	0.5%	1/10W	
R812	1-216-737-11	METAL GLAZE	1K	1%	1/10W	
R813	1-218-132-11	METAL GLAZE	4.7K	1%	1/10W	
R814	1-216-324-11	METAL GLAZE	10K	1%	1/10W	
R815	1-216-039-00	METAL CHIP	390	5%	1/10W	
R816	1-216-029-00	METAL CHIP	150	5%	1/10W	
R817	1-216-039-00	METAL CHIP	390	5%	1/10W	
R818	1-216-042-00	METAL CHIP	510	5%	1/10W	
R819	1-216-071-00	METAL CHIP	8.2K	5%	1/10W	
R820	1-216-079-00	METAL CHIP	18K	5%	1/10W	
R821	1-216-055-00	METAL CHIP	1.8K	5%	1/10W	
R822	1-216-119-00	METAL CHIP	820K	5%	1/10W	
R823	1-216-121-00	METAL CHIP	1M	5%	1/10W	
R824	1-216-073-00	METAL CHIP	10K	5%	1/10W	
R825	1-216-057-00	METAL CHIP	2.2K	5%	1/10W	
R827	1-216-025-00	METAL CHIP	100	5%	1/10W	
R828	1-216-041-00	METAL CHIP	470	5%	1/10W	
R829	1-216-025-00	METAL CHIP	100	5%	1/10W	

Ref. No.	Part No.	Description				Remark
R831	1-216-049-00	METAL CHIP	1K	5%	1/10W	
R832	1-216-047-00	METAL CHIP	820	5%	1/10W	
R833	1-216-055-00	METAL CHIP	1.8K	5%	1/10W	
R834	1-216-057-00	METAL CHIP	2.2K	5%	1/10W	
R835	1-216-049-00	METAL CHIP	1K	5%	1/10W	
R836	1-216-295-00	METAL CHIP	0	5%	1/10W	
R837	1-216-073-00	METAL CHIP	10K	5%	1/10W	
R838	1-216-105-00	METAL CHIP	220K	5%	1/10W	
R851	1-216-748-11	METAL CHIP	39K	5%	1/10W	
R852	1-216-075-00	METAL CHIP	12K	5%	1/10W	
R853	1-216-055-00	METAL CHIP	1.8K	5%	1/10W	
R854	1-216-041-00	METAL CHIP	470	5%	1/10W	
R856	1-216-639-11	METAL CHIP	330	0.5%	1/10W	
R857	1-216-639-11	METAL CHIP	330	0.5%	1/10W	
R858	1-216-038-00	METAL CHIP	360	5%	1/10W	
R859	1-216-081-00	METAL CHIP	22K	5%	1/10W	
R860	1-216-081-00	METAL CHIP	22K	5%	1/10W	
R861	1-216-057-00	METAL CHIP	2.2K	5%	1/10W	
R862	1-216-067-00	METAL CHIP	5.6K	5%	1/10W	
R901	1-216-047-00	METAL CHIP	820	5%	1/10W	
R902	1-216-057-00	METAL CHIP	2.2K	5%	1/10W	
R903	1-216-057-00	METAL CHIP	2.2K	5%	1/10W	
R904	1-216-081-00	METAL CHIP	22K	5%	1/10W	
R905	1-216-055-00	METAL CHIP	1.8K	5%	1/10W	
R907	1-216-041-00	METAL CHIP	470	5%	1/10W	
R910	1-216-089-00	METAL CHIP	47K	5%	1/10W	
R911	1-216-089-00	METAL CHIP	47K	5%	1/10W	
R912	1-216-089-00	METAL CHIP	47K	5%	1/10W	
R913	1-216-089-00	METAL CHIP	47K	5%	1/10W	
R914	1-216-089-00	METAL CHIP	47K	5%	1/10W	

〈 VARIABLE RESISTOR 〉

RV101	1-230-870-11	RES, ADJ, METAL	10K
RV201	1-230-868-11	RES, ADJ, METAL	2.2K
RV202	1-230-867-11	RES, ADJ, METAL	1K
RV299	1-230-873-11	RES, ADJ, METAL	47K
RV301	1-230-868-11	RES, ADJ, METAL	2.2K
RV302	1-230-870-11	RES, ADJ, METAL	10K
RV303	1-230-870-11	RES, ADJ, METAL	10K
RV304	1-230-870-11	RES, ADJ, METAL	10K
RV305	1-230-875-21	RES, ADJ, METAL	220K
RV401	1-230-873-11	RES, ADJ, METAL	47K

Ref. No.	Part No.	Description	Remark
RV402	1-230-869-11	RES, ADJ, METAL 4.7K	
RV403	1-230-868-11	RES, ADJ, METAL 2.2K	
RV404	1-230-868-11	RES, ADJ, METAL 2.2K	
RV405	1-230-866-11	RES, ADJ, METAL 470	
RV501	1-230-870-11	RES, ADJ, METAL 10K	
RV502	1-230-870-11	RES, ADJ, METAL 10K	
RV503	1-230-876-11	RES, ADJ, METAL 470K	
RV601	1-230-871-11	RES, ADJ, METAL 22K	
RV602	1-230-870-11	RES, ADJ, METAL 10K	
RV701	1-230-866-11	RES, ADJ, METAL 470	
RV702	1-230-866-11	RES, ADJ, METAL 470	
RV801	1-230-866-11	RES, ADJ, METAL 470	
RV802	1-230-866-11	RES, ADJ, METAL 470	

〈 COIL 〉

T101	1-409-466-21	TRAP
T501	1-235-397-11	PB C BPF
T601	1-409-396-11	REC C TRAP
T602	1-409-386-11	C E TRAP

〈 CRYSTAL 〉

X501	1-567-303-11	RESONATOR, CERAMIC (10.7MHz)
X601	1-567-505-11	OSCILLATOR, CRYSTAL (3.58MHz)
X602	1-567-735-11	CRYSTAL (5.9MHz)

****

* A-7062-009-A IF-20 BOARD, COMPLETE
****

* 1-533-189-11 HOLDER, FUSE

〈 CAPACITOR 〉

C001	1-124-234-00	ELECT	22uF	20%	16V
C002	1-163-125-00	CERAMIC CHIP	220PF	5%	50V
C003	1-124-234-00	ELECT	22uF	20%	16V
C004	1-124-234-00	ELECT	22uF	20%	16V
C007	1-124-234-00	ELECT	22uF	20%	16V
C009	1-124-584-00	ELECT	100uF	20%	10V
C010	1-124-584-00	ELECT	100uF	20%	10V
C011	1-124-584-00	ELECT	100uF	20%	10V
C012	1-124-584-00	ELECT	100uF	20%	10V
C013	1-124-584-00	ELECT	100uF	20%	10V

IF-20

Ref. No.	Part No.	Description			Remark
C014	1-124-234-00	ELECT	22uF	20%	16V
C015	1-124-234-00	ELECT	22uF	20%	16V
C016	1-124-234-00	ELECT	22uF	20%	16V
C017	1-124-584-00	ELECT	100uF	20%	10V
C018	1-124-234-00	ELECT	22uF	20%	16V
C021	1-124-584-00	ELECT	100uF	20%	10V
C022	1-124-234-00	ELECT	22uF	20%	16V
C023	1-126-162-11	ELECT	3.3uF	20%	50V
C051	1-124-234-00	ELECT	22uF	20%	16V
C052	1-163-125-00	CERAMIC CHIP	220PF	5%	50V
C053	1-124-234-00	ELECT	22uF	20%	16V
C054	1-124-234-00	ELECT	22uF	20%	16V
C057	1-124-234-00	ELECT	22uF	20%	16V
C059	1-124-584-00	ELECT	100uF	20%	10V
C060	1-124-584-00	ELECT	100uF	20%	10V
C061	1-124-584-00	ELECT	100uF	20%	10V
C062	1-124-584-00	ELECT	100uF	20%	10V
C063	1-124-584-00	ELECT	100uF	20%	10V
C064	1-124-234-00	ELECT	22uF	20%	16V
C065	1-124-234-00	ELECT	22uF	20%	16V
C066	1-124-234-00	ELECT	22uF	20%	16V
C067	1-124-234-00	ELECT	22uF	20%	16V
C081	1-124-584-00	ELECT	100uF	20%	10V
C082	1-124-234-00	ELECT	22uF	20%	16V
C083	1-126-162-11	ELECT	3.3uF	20%	50V
C165	1-163-035-00	CERAMIC CHIP	0.047uF		50V
C166	1-163-035-00	CERAMIC CHIP	0.047uF		50V
C167	1-126-162-11	ELECT	3.3uF	20%	50V
C168	1-124-234-00	ELECT	22uF	20%	16V
C170	1-124-472-11	ELECT	470uF	20%	10V
C171	1-124-584-00	ELECT	100uF	20%	10V
C172	1-164-161-11	CERAMIC CHIP	0.0022uF	10%	100V
C173	1-164-161-11	CERAMIC CHIP	0.0022uF	10%	100V
C201	1-126-154-11	ELECT	47uF	20%	6.3V
C202	1-163-809-11	CERAMIC CHIP	0.047uF	10%	25V
C203	1-126-157-11	ELECT	10uF	20%	16V
C204	1-164-232-11	CERAMIC CHIP	0.01uF		50V
C205	1-164-232-11	CERAMIC CHIP	0.01uF		50V
C206	1-124-584-00	ELECT	100uF	20%	10V
C207	1-126-153-11	ELECT	22uF	20%	6.3V
C208	1-126-369-11	ELECT	220uF	20%	6.3V
C209	1-163-106-00	CERAMIC CHIP	36PF	5%	50V

Ref. No.	Part No.	Description			Remark
C210	1-163-107-00	CERAMIC CHIP	39PF	5%	50V
C211	1-163-111-00	CERAMIC CHIP	56PF	5%	50V
C212	1-126-153-11	ELECT	22uF	20%	6.3V
C213	1-164-232-11	CERAMIC CHIP	0.01uF		50V
C214	1-163-129-00	CERAMIC CHIP	330PF	5%	50V
C215	1-163-115-00	CERAMIC CHIP	82PF	5%	50V
C216	1-163-115-00	CERAMIC CHIP	82PF	5%	50V
C217	1-126-154-11	ELECT	47uF	20%	6.3V
C219	1-126-154-11	ELECT	47uF	20%	6.3V
C220	1-164-232-11	CERAMIC CHIP	0.01uF		50V
C221	1-126-153-11	ELECT	22uF	20%	6.3V
C222	1-164-232-11	CERAMIC CHIP	0.01uF		50V
C223	1-126-153-11	ELECT	22uF	20%	6.3V
C224	1-163-125-00	CERAMIC CHIP	220PF	5%	50V
C225	1-164-232-11	CERAMIC CHIP	0.01uF		50V
C226	1-126-153-11	ELECT	22uF	20%	6.3V
C227	1-163-809-11	CERAMIC CHIP	0.047uF	10%	25V
C228	1-163-809-11	CERAMIC CHIP	0.047uF	10%	25V
C229	1-163-809-11	CERAMIC CHIP	0.047uF	10%	25V
C230	1-164-633-11	CERAMIC CHIP	0.1uF	10%	25V
C231	1-163-105-00	CERAMIC CHIP	33PF	5%	50V
C232	1-163-105-00	CERAMIC CHIP	33PF	5%	50V
C233	1-163-809-11	CERAMIC CHIP	0.047uF	10%	25V
C234	1-126-153-11	ELECT	22uF	20%	6.3V
C235	1-163-809-11	CERAMIC CHIP	0.047uF	10%	25V
C236	1-163-097-00	CERAMIC CHIP	15PF	5%	50V
C237	1-164-232-11	CERAMIC CHIP	0.01uF		50V
C238	1-164-232-11	CERAMIC CHIP	0.01uF		50V
C240	1-126-163-11	ELECT	4.7uF	20%	50V
C241	1-163-117-00	CERAMIC CHIP	100PF	5%	50V
C242	1-163-809-11	CERAMIC CHIP	0.047uF	10%	25V
C243	1-164-232-11	CERAMIC CHIP	0.01uF		50V
C244	1-164-232-11	CERAMIC CHIP	0.01uF		50V
C245	1-164-232-11	CERAMIC CHIP	0.01uF		50V
C246	1-163-809-11	CERAMIC CHIP	0.047uF	10%	25V
C247	1-163-809-11	CERAMIC CHIP	0.047uF	10%	25V
C248	1-126-154-11	ELECT	47uF	20%	6.3V
C249	1-163-809-11	CERAMIC CHIP	0.047uF	10%	25V
C250	1-126-163-11	ELECT	4.7uF	20%	50V
C251	1-163-119-00	CERAMIC CHIP	120PF	5%	50V
C252	1-163-809-11	CERAMIC CHIP	0.047uF	10%	25V
C253	1-164-232-11	CERAMIC CHIP	0.01uF		50V

Ref. No.	Part No.	Description			Remark
C254	1-164-232-11	CERAMIC CHIP	0.01uF		50V
C255	1-164-232-11	CERAMIC CHIP	0.01uF		50V
C256	1-164-232-11	CERAMIC CHIP	0.01uF		50V
C257	1-164-232-11	CERAMIC CHIP	0.01uF		50V
C258	1-163-809-11	CERAMIC CHIP	0.047uF	10%	25V
C259	1-126-154-11	ELECT	47uF	20%	6.3V
C260	1-163-809-11	CERAMIC CHIP	0.047uF	10%	25V
C261	1-126-154-11	ELECT	47uF	20%	6.3V
C263	1-126-154-11	ELECT	47uF	20%	6.3V
C264	1-163-105-00	CERAMIC CHIP	33PF	5%	50V
C265	1-163-105-00	CERAMIC CHIP	33PF	5%	50V
C330	1-126-162-11	ELECT	3.3uF	20%	50V
C331	1-126-157-11	ELECT	10uF	20%	16V
C332	1-163-809-11	CERAMIC CHIP	0.047uF	10%	25V
C333	1-163-809-11	CERAMIC CHIP	0.047uF	10%	25V
C334	1-124-584-00	ELECT	100uF	20%	10V
C335	1-124-584-00	ELECT	100uF	20%	10V
C336	1-163-099-00	CERAMIC CHIP	18PF	5%	50V
C337	1-124-584-00	ELECT	100uF	20%	10V
C339	1-163-104-00	CERAMIC CHIP	30PF	5%	50V
C340	1-126-153-11	ELECT	22uF	20%	6.3V
C344	1-126-154-11	ELECT	47uF	20%	6.3V
C345	1-126-157-11	ELECT	10uF	20%	16V
C346	1-126-153-11	ELECT	22uF	20%	6.3V
C350	1-126-154-11	ELECT	47uF	20%	6.3V
C351	1-126-157-11	ELECT	10uF	20%	16V
C352	1-163-809-11	CERAMIC CHIP	0.047uF	10%	25V
C353	1-163-809-11	CERAMIC CHIP	0.047uF	10%	25V
C354	1-126-154-11	ELECT	47uF	20%	6.3V
C355	1-126-153-11	ELECT	22uF	20%	6.3V
C356	1-126-157-11	ELECT	10uF	20%	16V
C357	1-163-809-11	CERAMIC CHIP	0.047uF	10%	25V
C358	1-126-154-11	ELECT	47uF	20%	6.3V
C359	1-126-157-11	ELECT	10uF	20%	16V
C360	1-126-157-11	ELECT	10uF	20%	16V
C361	1-163-809-11	CERAMIC CHIP	0.047uF	10%	25V
C362	1-163-809-11	CERAMIC CHIP	0.047uF	10%	25V
C363	1-126-154-11	ELECT	47uF	20%	6.3V
C364	1-163-809-11	CERAMIC CHIP	0.047uF	10%	25V
C365	1-163-809-11	CERAMIC CHIP	0.047uF	10%	25V
C369	1-126-157-11	ELECT	10uF	20%	16V

Ref. No.	Part No.	Description			Remark
C370	1-163-809-11	CERAMIC CHIP	0.047uF	10%	25V
C371	1-126-154-11	ELECT	47uF	20%	6.3V
C372	1-163-809-11	CERAMIC CHIP	0.047uF	10%	25V
C373	1-163-809-11	CERAMIC CHIP	0.047uF	10%	25V
C401	1-163-099-00	CERAMIC CHIP	18PF	5%	50V
C402	1-126-154-11	ELECT	47uF	20%	6.3V
C404	1-163-101-00	CERAMIC CHIP	22PF	5%	50V
C406	1-126-154-11	ELECT	47uF	20%	6.3V
C407	1-124-229-00	ELECT	33uF	20%	10V
C408	1-163-097-00	CERAMIC CHIP	15PF	5%	50V
C409	1-126-154-11	ELECT	47uF	20%	6.3V
C410	1-124-229-00	ELECT	33uF	20%	10V
C411	1-126-154-11	ELECT	47uF	20%	6.3V
C412	1-163-809-11	CERAMIC CHIP	0.047uF	10%	25V
C413	1-163-809-11	CERAMIC CHIP	0.047uF	10%	25V
C414	1-163-809-11	CERAMIC CHIP	0.047uF	10%	25V
C415	1-163-809-11	CERAMIC CHIP	0.047uF	10%	25V
C416	1-163-809-11	CERAMIC CHIP	0.047uF	10%	25V
C418	1-126-157-11	ELECT	10uF	20%	16V
C419	1-163-809-11	CERAMIC CHIP	0.047uF	10%	25V
C421	1-126-157-11	ELECT	10uF	20%	16V
C422	1-163-809-11	CERAMIC CHIP	0.047uF	10%	25V
C423	1-126-154-11	ELECT	47uF	20%	6.3V
C424	1-163-809-11	CERAMIC CHIP	0.047uF	10%	25V
C425	1-163-809-11	CERAMIC CHIP	0.047uF	10%	25V
C426	1-163-809-11	CERAMIC CHIP	0.047uF	10%	25V
C427	1-163-809-11	CERAMIC CHIP	0.047uF	10%	25V
C428	1-163-035-00	CERAMIC CHIP	0.047uF		50V
C429	1-163-035-00	CERAMIC CHIP	0.047uF		50V
C501	1-163-809-11	CERAMIC CHIP	0.047uF	10%	25V
C502	1-124-589-11	ELECT	47uF	20%	16V
C503	1-163-809-11	CERAMIC CHIP	0.047uF	10%	25V
C504	1-124-584-00	ELECT	100uF	20%	10V
C505	1-163-091-00	CERAMIC CHIP	8PF		50V
C506	1-163-101-00	CERAMIC CHIP	22PF	5%	50V
C507	1-163-101-00	CERAMIC CHIP	22PF	5%	50V
C508	1-163-109-00	CERAMIC CHIP	47PF	5%	50V
C509	1-124-589-11	ELECT	47uF	20%	16V
C510	1-163-091-00	CERAMIC CHIP	8PF		50V
C511	1-163-101-00	CERAMIC CHIP	22PF	5%	50V
C512	1-163-101-00	CERAMIC CHIP	22PF	5%	50V
C513	1-163-109-00	CERAMIC CHIP	47PF	5%	50V

IF-20

Ref. No.	Part No.	Description			Remark
C514	1-124-589-11	ELECT	47uF	20%	16V
C515	1-163-093-00	CERAMIC CHIP	10PF	5%	50V
C516	1-126-157-11	ELECT	10uF	20%	16V
C517	1-124-584-00	ELECT	100uF	20%	10V
C518	1-163-809-11	CERAMIC CHIP	0.047uF	10%	25V
C519	1-163-091-00	CERAMIC CHIP	8PF		50V
C520	1-163-101-00	CERAMIC CHIP	22PF	5%	50V
C521	1-163-101-00	CERAMIC CHIP	22PF	5%	50V
C522	1-163-109-00	CERAMIC CHIP	47PF	5%	50V
C523	1-124-589-11	ELECT	47uF	20%	16V
C524	1-124-589-11	ELECT	47uF	20%	16V
C525	1-163-809-11	CERAMIC CHIP	0.047uF	10%	25V
C526	1-163-809-11	CERAMIC CHIP	0.047uF	10%	25V
C527	1-163-809-11	CERAMIC CHIP	0.047uF	10%	25V
C601	1-124-589-11	ELECT	47uF	20%	16V
C602	1-163-809-11	CERAMIC CHIP	0.047uF	10%	25V
C603	1-124-589-11	ELECT	47uF	20%	16V
C604	1-163-103-00	CERAMIC CHIP	27PF	5%	50V
C605	1-163-809-11	CERAMIC CHIP	0.047uF	10%	25V
C606	1-126-157-11	ELECT	10uF	20%	16V
C607	1-126-157-11	ELECT	10uF	20%	16V
C608	1-126-157-11	ELECT	10uF	20%	16V
C609	1-124-584-00	ELECT	100uF	20%	10V
C610	1-163-809-11	CERAMIC CHIP	0.047uF	10%	25V
C611	1-163-105-00	CERAMIC CHIP	33PF	5%	50V
C612	1-124-589-11	ELECT	47uF	20%	16V
C613	1-163-093-00	CERAMIC CHIP	10PF	5%	50V
C614	1-126-157-11	ELECT	10uF	20%	16V
C615	1-124-589-11	ELECT	47uF	20%	16V
C616	1-163-809-11	CERAMIC CHIP	0.047uF	10%	25V
C617	1-163-809-11	CERAMIC CHIP	0.047uF	10%	25V
C618	1-126-157-11	ELECT	10uF	20%	16V
C619	1-126-157-11	ELECT	10uF	20%	16V
C620	1-126-157-11	ELECT	10uF	20%	16V
C621	1-126-157-11	ELECT	10uF	20%	16V
C622	1-124-234-00	ELECT	22uF	20%	16V
C623	1-163-809-11	CERAMIC CHIP	0.047uF	10%	25V
C624	1-126-157-11	ELECT	10uF	20%	16V
C627	1-163-809-11	CERAMIC CHIP	0.047uF	10%	25V
C628	1-126-157-11	ELECT	10uF	20%	16V
C629	1-126-157-11	ELECT	10uF	20%	16V
C631	1-126-157-11	ELECT	10uF	20%	16V
C632	1-163-009-11	CERAMIC CHIP	0.001uF	10%	50V
C633	1-163-133-00	CERAMIC CHIP	470PF	5%	50V
C634	1-163-809-11	CERAMIC CHIP	0.047uF	10%	25V
C701	1-163-809-11	CERAMIC CHIP	0.047uF	10%	25V
C702	1-124-589-11	ELECT	47uF	20%	16V
C703	1-164-633-11	CERAMIC CHIP	0.1uF	10%	25V
C704	1-163-809-11	CERAMIC CHIP	0.047uF	10%	25V
C705	1-124-589-11	ELECT	47uF	20%	16V
C708	1-164-232-11	CERAMIC CHIP	0.01uF		50V
C709	1-164-232-11	CERAMIC CHIP	0.01uF		50V
C710	1-163-809-11	CERAMIC CHIP	0.047uF	10%	25V
C711	1-164-232-11	CERAMIC CHIP	0.01uF		50V
C712	1-163-133-00	CERAMIC CHIP	470PF	5%	50V
C713	1-163-809-11	CERAMIC CHIP	0.047uF	10%	25V
C714	1-124-234-00	ELECT	22uF	20%	16V
C715	1-163-809-11	CERAMIC CHIP	0.047uF	10%	25V
C716	1-126-157-11	ELECT	10uF	20%	16V
C718	1-163-093-00	CERAMIC CHIP	10PF	5%	50V
C719	1-163-809-11	CERAMIC CHIP	0.047uF	10%	25V
C720	1-124-589-11	ELECT	47uF	20%	16V
C721	1-163-809-11	CERAMIC CHIP	0.047uF	10%	25V
C722	1-124-589-11	ELECT	47uF	20%	16V
C723	1-163-809-11	CERAMIC CHIP	0.047uF	10%	25V
C724	1-163-088-00	CERAMIC CHIP	5PF		50V
C725	1-163-101-00	CERAMIC CHIP	22PF	5%	50V
C726	1-124-584-00	ELECT	100uF	20%	10V
C727	1-163-101-00	CERAMIC CHIP	22PF	5%	50V
C728	1-124-472-11	ELECT	470uF	20%	10V
C729	1-163-093-00	CERAMIC CHIP	10PF	5%	50V
C730	1-126-157-11	ELECT	10uF	20%	16V
C731	1-124-589-11	ELECT	47uF	20%	16V
C732	1-163-093-00	CERAMIC CHIP	10PF	5%	50V
C733	1-126-157-11	ELECT	10uF	20%	16V
C734	1-124-589-11	ELECT	47uF	20%	16V
C735	1-163-809-11	CERAMIC CHIP	0.047uF	10%	25V
C736	1-163-809-11	CERAMIC CHIP	0.047uF	10%	25V
C737	1-163-809-11	CERAMIC CHIP	0.047uF	10%	25V
C738	1-163-097-00	CERAMIC CHIP	15PF	5%	50V
C739	1-126-157-11	ELECT	10uF	20%	16V
C740	1-163-809-11	CERAMIC CHIP	0.047uF	10%	25V
C741	1-124-234-00	ELECT	22uF	20%	16V

Ref. No.	Part No.	Description			Remark
C742	1-163-809-11	CERAMIC CHIP	0.047uF	10%	25V
C743	1-163-809-11	CERAMIC CHIP	0.047uF	10%	25V
C744	1-124-589-11	ELECT	47uF	20%	16V
C745	1-163-809-11	CERAMIC CHIP	0.047uF	10%	25V
C746	1-126-157-11	ELECT	10uF	20%	16V
C747	1-164-232-11	CERAMIC CHIP	0.01uF		50V
C748	1-164-232-11	CERAMIC CHIP	0.01uF		50V
C749	1-126-157-11	ELECT	10uF	20%	16V
C750	1-126-157-11	ELECT	10uF	20%	16V
C752	1-163-809-11	CERAMIC CHIP	0.047uF	10%	25V
C753	1-163-809-11	CERAMIC CHIP	0.047uF	10%	25V
C754	1-124-589-11	ELECT	47uF	20%	16V
C755	1-163-095-00	CERAMIC CHIP	12PF	5%	50V
C756	1-126-157-11	ELECT	10uF	20%	16V
C757	1-163-809-11	CERAMIC CHIP	0.047uF	10%	25V
C758	1-124-584-00	ELECT	100uF	20%	10V
C801	1-126-163-11	ELECT	4.7uF	20%	50V
C802	1-126-163-11	ELECT	4.7uF	20%	50V
C803	1-124-584-00	ELECT	100uF	20%	10V
C804	1-163-809-11	CERAMIC CHIP	0.047uF	10%	25V
C805	1-126-163-11	ELECT	4.7uF	20%	50V
C806	1-124-584-00	ELECT	100uF	20%	10V
C807	1-124-584-00	ELECT	100uF	20%	10V
C808	1-126-163-11	ELECT	4.7uF	20%	50V
C809	1-135-155-21	TANTALUM CHIP	4.7uF	10%	10V
C810	1-135-155-21	TANTALUM CHIP	4.7uF	10%	10V
C811	1-124-584-00	ELECT	100uF	20%	10V
C812	1-163-809-11	CERAMIC CHIP	0.047uF	10%	25V
C813	1-135-155-21	TANTALUM CHIP	4.7uF	10%	10V
C814	1-124-584-00	ELECT	100uF	20%	10V
C815	1-124-584-00	ELECT	100uF	20%	10V
C816	1-135-155-21	TANTALUM CHIP	4.7uF	10%	10V
C817	1-124-584-00	ELECT	100uF	20%	10V
C901	1-163-809-11	CERAMIC CHIP	0.047uF	10%	25V
C902	1-163-809-11	CERAMIC CHIP	0.047uF	10%	25V
C903	1-164-161-11	CERAMIC CHIP	0.0022uF	10%	100V
C904	1-164-161-11	CERAMIC CHIP	0.0022uF	10%	100V
C905	1-124-465-00	ELECT	0.47uF	20%	50V
C906	1-126-162-11	ELECT	3.3uF	20%	50V
C907	1-163-125-00	CERAMIC CHIP	220PF	5%	50V
C908	1-126-154-11	ELECT	47uF	20%	6.3V
C909	1-163-809-11	CERAMIC CHIP	0.047uF	10%	25V
C910	1-126-157-11	ELECT	10uF	20%	16V
C911	1-126-157-11	ELECT	10uF	20%	16V
		〈 CONNECTOR 〉			
CN001	1-506-475-11	CONNECTOR 10P, MALE			
CN002	1-506-471-11	CONNECTOR 6P, MALE			
CN004	1-506-470-11	CONNECTOR 5P, MALE			
CN005	1-506-473-11	CONNECTOR 8P, MALE			
CN006	1-506-471-11	CONNECTOR 6P, MALE			
CN007	1-506-474-11	CONNECTOR 9P, MALE			
CN008	1-506-471-11	CONNECTOR 6P, MALE			
CN101	* 1-560-900-00	PIN, CONNECTOR 12P			
CN102	1-506-477-11	CONNECTOR 12P, MALE			
CN103	1-506-468-11	CONNECTOR 3P, MALE			
CN104	1-506-472-11	CONNECTOR 7P, MALE			
CN901	1-506-470-11	CONNECTOR 5P, MALE			
CN902	1-506-472-11	CONNECTOR 7P, MALE			
CN903	1-506-471-11	CONNECTOR 6P, MALE			
CN904	1-506-470-11	CONNECTOR 5P, MALE			
CN905	1-506-473-11	CONNECTOR 8P, MALE			
CN906	1-506-472-11	CONNECTOR 7P, MALE			
CN911	1-506-467-11	CONNECTOR 2P, MALE			
		〈 DIODE 〉			
D001	8-719-104-34	DIODE 1S2836			
D002	8-719-104-34	DIODE 1S2836			
D003	8-719-104-34	DIODE 1S2836			
D004	8-719-104-34	DIODE 1S2836			
D010	8-719-800-76	DIODE 1SS226			
D051	8-719-104-34	DIODE 1S2836			
D052	8-719-104-34	DIODE 1S2836			
D053	8-719-104-34	DIODE 1S2836			
D054	8-719-104-34	DIODE 1S2836			
D060	8-719-800-76	DIODE 1SS226			
D165	8-719-400-18	DIODE MA152WK			
D166	8-719-400-18	DIODE MA152WK			
D167	8-719-800-76	DIODE 1SS226			
D168	8-719-800-76	DIODE 1SS226			
D169	8-719-800-76	DIODE 1SS226			
D170	8-719-800-76	DIODE 1SS226			
D171	8-719-104-34	DIODE 1S2836			
D201	8-719-800-76	DIODE 1SS226			

IF-20

Ref. No.	Part No.	Description	Remark
D901	8-719-400-18	DIODE MA152WK	
D902	8-719-400-18	DIODE MA152WK	
D903	8-719-104-34	DIODE 1S2836	
D904	8-719-400-18	DIODE MA152WK	
		⟨ DELAY LINE ⟩	
DL201	1-415-342-00	DELAY LINE, 1H	
DL202	1-415-342-00	DELAY LINE, 1H	
		⟨ FUSE ⟩	
F101	⚠ 1-532-777-21	FUSE, MICRO (SECONDARY) (1.25A 125V)	
F102	⚠ 1-532-775-11	FUSE, MICRO (SECONDARY) (0.8A 125V)	
F103	⚠ 1-532-773-21	FUSE, MICRO (SECONDARY) (0.8A 125V)	
F104	⚠ 1-532-776-21	FUSE, MICRO (SECONDARY) (1A 125V)	
F105	⚠ 1-532-776-21	FUSE, MICRO (SECONDARY) (1A 125V)	
F106	⚠ 1-532-773-21	FUSE, MICRO (SECONDARY) (0.5A 125V)	
F107	⚠ 1-532-775-11	FUSE, MICRO (SECONDARY) (0.8A 125V)	
F108	⚠ 1-532-773-21	FUSE, MICRO (SECONDARY) (0.5A 125V)	
F109	⚠ 1-532-773-21	FUSE, MICRO (SECONDARY) (0.5A 125V)	
		⟨ HOURS METER ⟩	
FC901	1-548-119-21	HOURS METER	
		⟨ FILTER ⟩	
FL331	1-236-564-11	FILTER, LOW PASS	
FL332	1-235-779-11	LPF	
FL333	1-236-563-11	FILTER, BAND PASS	
FL401	1-415-647-11	DELAY LINE, LC 250NS	
FL501	1-415-637-11	DELAY LINE, LC 150NS	
FL502	1-415-637-11	DELAY LINE, LC 150NS	
FL503	1-415-637-11	DELAY LINE, LC 150NS	
FL701	1-415-551-11	DELAY LINE 140NS	
FL702	1-415-551-11	DELAY LINE 140NS	
FL703	1-415-551-11	DELAY LINE 140NS	
FL704	1-415-551-11	DELAY LINE 140NS	
FL705	1-235-617-11	FILTER, LOW-PASS 1MHz	
		⟨ IC ⟩	
IC001	8-759-981-92	IC RC4558M	
IC003	8-759-981-92	IC RC4558M	
IC004	8-759-981-92	IC RC4558M	
IC005	8-759-932-64	IC BU4052BF	
IC006	8-759-981-92	IC RC4558M	
IC051	8-759-981-92	IC RC4558M	
IC054	8-759-981-92	IC RC4558M	
IC055	8-759-932-64	IC BU4052BF	
IC056	8-759-981-92	IC RC4558M	
IC165	8-759-200-67	IC TC4001BF	
IC201	8-759-030-55	IC MC1496MR	
IC202	8-759-030-55	IC MC1496MR	
IC331	8-759-710-62	IC NJM2246M	
IC332	8-759-710-62	IC NJM2246M	
IC333	8-759-710-09	IC NJM2233AM	
IC401	8-759-711-71	IC NJM2234M	
IC402	8-759-711-71	IC NJM2234M	
IC601	8-759-200-60	IC TA7060AP	
IC602	8-759-200-60	IC TA7060AP	
IC603	8-759-400-06	IC AN608P	
IC701	8-759-200-60	IC TA7060AP	
IC702	8-759-402-33	IC AN607P	
IC703	8-752-201-30	IC CX22013	
IC704	8-759-969-13	IC SN16913P	
IC705	8-759-101-12	IC uPC311G2	
IC801	8-752-009-51	IC CX20095A	
IC802	8-752-009-51	IC CX20095A	
IC901	8-759-009-10	IC MC14069UBF	
IC902	8-759-009-10	IC MC14069UBF	
IC903	8-759-100-93	IC uPC393G2	
		⟨ COIL ⟩	
L201	1-408-979-21	INDUCTOR 56uH	
L202	1-408-972-21	INDUCTOR 15uH	
L203	1-408-979-21	INDUCTOR 56uH	
L204	1-408-973-21	INDUCTOR 18uH	
L205	1-408-974-21	INDUCTOR 22uH	
L206	1-408-976-21	INDUCTOR 33uH	
L207	1-408-972-21	INDUCTOR 15uH	
L208	1-408-979-21	INDUCTOR 56uH	
L209	1-408-980-21	INDUCTOR 68uH	
L210	1-408-979-21	INDUCTOR 56uH	
L211	1-408-984-21	INDUCTOR 150uH	
L212	1-408-972-21	INDUCTOR 15uH	
L213	1-408-973-21	INDUCTOR 18uH	

The components identified by mark ⚠ or dotted line with mark ⚠ are critical for safety.
Replace only with part number specified.

Les composants identifiés par une marque ⚠ sont critiques pour la sécurité.
Ne les remplacer que par une piéce portant le numéro spécifié.

Ref. No.	Part No.	Description	Remark
L214	1-408-979-21	INDUCTOR 56uH	
L215	1-408-972-21	INDUCTOR 15uH	
L332	1-408-979-21	INDUCTOR 56uH	
L334	1-408-979-21	INDUCTOR 56uH	
L335	1-408-975-21	INDUCTOR 27uH	
L402	1-408-979-21	INDUCTOR 56uH	
L403	1-408-979-21	INDUCTOR 56uH	
L501	1-408-962-21	INDUCTOR 2.2uH	
L502	1-408-962-21	INDUCTOR 2.2uH	
L503	1-408-962-21	INDUCTOR 2.2uH	
L505	1-408-979-21	INDUCTOR 56uH	
L506	1-408-979-21	INDUCTOR 56uH	
L601	1-408-989-21	INDUCTOR 470uH	
L602	1-408-979-21	INDUCTOR 56uH	
L603	1-410-071-11	INDUCTOR 10mH	
L701	1-408-979-21	INDUCTOR 56uH	
L702	1-408-979-21	INDUCTOR 56uH	
L705	1-408-964-21	INDUCTOR 3.3uH	
L706	1-408-979-21	INDUCTOR 56uH	
L707	1-408-964-21	INDUCTOR 3.3uH	
L708	1-408-979-21	INDUCTOR 56uH	
L709	1-408-979-21	INDUCTOR 56uH	
L801	1-408-979-21	INDUCTOR 56uH	
L802	1-408-979-21	INDUCTOR 56uH	
		⟨ COIL VARIABLE ⟩	
LV201	1-408-520-00	COIL, VARIABLE 15uH	
LV202	1-408-520-00	COIL, VARIABLE 15uH	
		⟨ TRANSISTOR ⟩	
Q001	8-729-202-38	TRANSISTOR 2SC3326N	
Q002	8-729-202-38	TRANSISTOR 2SC3326N	
Q003	8-729-202-38	TRANSISTOR 2SC3326N	
Q004	8-729-202-38	TRANSISTOR 2SC3326N	
Q005	8-729-202-38	TRANSISTOR 2SC3326N	
Q006	8-729-202-38	TRANSISTOR 2SC3326N	
Q007	8-729-202-38	TRANSISTOR 2SC3326N	
Q008	8-729-202-38	TRANSISTOR 2SC3326N	
Q010	8-729-140-75	TRANSISTOR 2SD999	
Q011	8-729-901-06	TRANSISTOR DTA144EK	
Q051	8-729-202-38	TRANSISTOR 2SC3326N	
Q052	8-729-202-38	TRANSISTOR 2SC3326N	
Q053	8-729-202-38	TRANSISTOR 2SC3326N	
Q054	8-729-202-38	TRANSISTOR 2SC3326N	
Q055	8-729-202-38	TRANSISTOR 2SC3326N	
Q056	8-729-202-38	TRANSISTOR 2SC3326N	
Q057	8-729-202-38	TRANSISTOR 2SC3326N	
Q060	8-729-101-07	TRANSISTOR 2SB798	
Q061	8-729-901-01	TRANSISTOR DTC144EK	
Q165	8-729-901-06	TRANSISTOR DTA144EK	
Q166	8-729-901-01	TRANSISTOR DTC144EK	
Q167	8-729-100-66	TRANSISTOR 2SC1623	
Q168	8-729-901-06	TRANSISTOR DTA144EK	
Q169	8-729-901-06	TRANSISTOR DTA144EK	
Q170	8-729-901-06	TRANSISTOR DTA144EK	
Q171	8-729-901-06	TRANSISTOR DTA144EK	
Q172	8-729-100-66	TRANSISTOR 2SC1623	
Q174	8-729-901-06	TRANSISTOR DTA144EK	
Q175	8-729-901-06	TRANSISTOR DTA144EK	
Q176	8-729-901-06	TRANSISTOR DTA144EK	
Q177	8-729-901-06	TRANSISTOR DTA144EK	
Q178	8-729-901-01	TRANSISTOR DTC144EK	
Q179	8-729-901-06	TRANSISTOR DTA144EK	
Q180	8-729-901-01	TRANSISTOR DTC144EK	
Q181	8-729-901-01	TRANSISTOR DTC144EK	
Q182	8-729-216-22	TRANSISTOR 2SA1162	
Q183	8-729-901-01	TRANSISTOR DTC144EK	
Q184	8-729-901-01	TRANSISTOR DTC144EK	
Q186	8-729-901-06	TRANSISTOR DTA144EK	
Q188	8-729-901-06	TRANSISTOR DTA144EK	
Q191	8-729-216-22	TRANSISTOR 2SA1162	
Q201	8-729-100-66	TRANSISTOR 2SC1623	
Q202	8-729-100-66	TRANSISTOR 2SC1623	
Q203	8-729-100-66	TRANSISTOR 2SC1623	
Q204	8-729-320-17	TRANSISTOR 2SA1122CD	
Q205	8-729-100-66	TRANSISTOR 2SC1623	
Q206	8-729-100-66	TRANSISTOR 2SC1623	
Q207	8-729-100-66	TRANSISTOR 2SC1623	
Q208	8-729-320-17	TRANSISTOR 2SA1122CD	
Q209	8-729-320-17	TRANSISTOR 2SA1122CD	
Q210	8-729-320-17	TRANSISTOR 2SA1122CD	
Q211	8-729-320-17	TRANSISTOR 2SA1122CD	
Q212	8-729-100-66	TRANSISTOR 2SC1623	

IF-20

Ref. No.	Part No.	Description	Remark
Q213	8-729-100-66	TRANSISTOR 2SC1623	
Q214	8-729-100-66	TRANSISTOR 2SC1623	
Q215	8-729-100-66	TRANSISTOR 2SC1623	
Q216	8-729-100-66	TRANSISTOR 2SC1623	
Q217	8-729-100-66	TRANSISTOR 2SC1623	
Q220	8-729-100-66	TRANSISTOR 2SC1623	
Q221	8-729-100-66	TRANSISTOR 2SC1623	
Q222	8-729-100-66	TRANSISTOR 2SC1623	
Q223	8-729-100-66	TRANSISTOR 2SC1623	
Q224	8-729-100-66	TRANSISTOR 2SC1623	
Q225	8-729-100-66	TRANSISTOR 2SC1623	
Q226	8-729-320-17	TRANSISTOR 2SA1122CD	
Q227	8-729-100-66	TRANSISTOR 2SC1623	
Q228	8-729-100-66	TRANSISTOR 2SC1623	
Q229	8-729-100-66	TRANSISTOR 2SC1623	
Q230	8-729-100-66	TRANSISTOR 2SC1623	
Q231	8-729-100-66	TRANSISTOR 2SC1623	
Q233	8-729-100-66	TRANSISTOR 2SC1623	
Q234	8-729-100-66	TRANSISTOR 2SC1623	
Q330	8-729-100-66	TRANSISTOR 2SC1623	
Q331	8-729-100-66	TRANSISTOR 2SC1623	
Q332	8-729-100-66	TRANSISTOR 2SC1623	
Q333	8-729-100-66	TRANSISTOR 2SC1623	
Q334	8-729-100-66	TRANSISTOR 2SC1623	
Q335	8-729-100-66	TRANSISTOR 2SC1623	
Q336	8-729-100-66	TRANSISTOR 2SC1623	
Q337	8-729-100-66	TRANSISTOR 2SC1623	
Q338	8-729-100-66	TRANSISTOR 2SC1623	
Q339	8-729-100-66	TRANSISTOR 2SC1623	
Q340	8-729-100-66	TRANSISTOR 2SC1623	
Q341	8-729-100-66	TRANSISTOR 2SC1623	
Q342	8-729-100-66	TRANSISTOR 2SC1623	
Q401	8-729-100-66	TRANSISTOR 2SC1623	
Q402	8-729-100-66	TRANSISTOR 2SC1623	
Q403	8-729-100-66	TRANSISTOR 2SC1623	
Q404	8-729-100-66	TRANSISTOR 2SC1623	
Q405	8-729-100-66	TRANSISTOR 2SC1623	
Q406	8-729-100-66	TRANSISTOR 2SC1623	
Q407	8-729-100-66	TRANSISTOR 2SC1623	
Q408	8-729-100-66	TRANSISTOR 2SC1623	
Q409	8-729-100-66	TRANSISTOR 2SC1623	
Q410	8-729-100-66	TRANSISTOR 2SC1623	
Q411	8-729-100-66	TRANSISTOR 2SC1623	
Q412	8-729-100-66	TRANSISTOR 2SC1623	
Q413	8-729-100-66	TRANSISTOR 2SC1623	
Q414	8-729-100-66	TRANSISTOR 2SC1623	
Q501	8-729-100-66	TRANSISTOR 2SC1623	
Q502	8-729-100-66	TRANSISTOR 2SC1623	
Q503	8-729-901-06	TRANSISTOR DTA144EK	
Q504	8-729-100-66	TRANSISTOR 2SC1623	
Q505	8-729-100-66	TRANSISTOR 2SC1623	
Q506	8-729-100-66	TRANSISTOR 2SC1623	
Q507	8-729-901-06	TRANSISTOR DTA144EK	
Q508	8-729-100-66	TRANSISTOR 2SC1623	
Q509	8-729-100-66	TRANSISTOR 2SC1623	
Q510	8-729-100-66	TRANSISTOR 2SC1623	
Q511	8-729-100-66	TRANSISTOR 2SC1623	
Q512	8-729-100-66	TRANSISTOR 2SC1623	
Q513	8-729-100-66	TRANSISTOR 2SC1623	
Q514	8-729-100-66	TRANSISTOR 2SC1623	
Q515	8-729-100-66	TRANSISTOR 2SC1623	
Q516	8-729-100-66	TRANSISTOR 2SC1623	
Q517	8-729-901-06	TRANSISTOR DTA144EK	
Q518	8-729-100-66	TRANSISTOR 2SC1623	
Q519	8-729-100-66	TRANSISTOR 2SC1623	
Q520	8-729-901-06	TRANSISTOR DTA144EK	
Q521	8-729-901-06	TRANSISTOR DTA144EK	
Q601	8-729-100-66	TRANSISTOR 2SC1623	
Q602	8-729-901-01	TRANSISTOR DTC144EK	
Q603	8-729-100-66	TRANSISTOR 2SC1623	
Q604	8-729-100-66	TRANSISTOR 2SC1623	
Q605	8-729-100-66	TRANSISTOR 2SC1623	
Q606	8-729-100-66	TRANSISTOR 2SC1623	
Q607	8-729-100-66	TRANSISTOR 2SC1623	
Q608	8-729-100-66	TRANSISTOR 2SC1623	
Q609	8-729-100-66	TRANSISTOR 2SC1623	
Q610	8-729-100-66	TRANSISTOR 2SC1623	
Q611	8-729-100-66	TRANSISTOR 2SC1623	
Q612	8-729-901-06	TRANSISTOR DTA144EK	
Q613	8-729-901-01	TRANSISTOR DTC144EK	
Q614	8-729-901-01	TRANSISTOR DTC144EK	
Q615	8-729-901-06	TRANSISTOR DTA144EK	
Q616	8-729-901-06	TRANSISTOR DTA144EK	
Q701	8-729-100-66	TRANSISTOR 2SC1623	

Ref. No.	Part No.	Description	Remark
Q702	8-729-100-66	TRANSISTOR 2SC1623	
Q703	8-729-202-38	TRANSISTOR 2SC3326N	
Q704	8-729-100-66	TRANSISTOR 2SC1623	
Q705	8-729-100-66	TRANSISTOR 2SC1623	
Q706	8-729-100-66	TRANSISTOR 2SC1623	
Q707	8-729-100-66	TRANSISTOR 2SC1623	
Q708	8-729-100-66	TRANSISTOR 2SC1623	
Q709	8-729-100-66	TRANSISTOR 2SC1623	
Q710	8-729-100-66	TRANSISTOR 2SC1623	
Q711	8-729-100-66	TRANSISTOR 2SC1623	
Q712	8-729-100-66	TRANSISTOR 2SC1623	
Q713	8-729-100-66	TRANSISTOR 2SC1623	
Q714	8-729-100-66	TRANSISTOR 2SC1623	
Q715	8-729-100-66	TRANSISTOR 2SC1623	
Q716	8-729-100-66	TRANSISTOR 2SC1623	
Q717	8-729-100-66	TRANSISTOR 2SC1623	
Q718	8-729-100-66	TRANSISTOR 2SC1623	
Q719	8-729-100-66	TRANSISTOR 2SC1623	
Q720	8-729-100-66	TRANSISTOR 2SC1623	
Q721	8-729-320-17	TRANSISTOR 2SA1122CD	
Q722	8-729-100-66	TRANSISTOR 2SC1623	
Q723	8-729-100-66	TRANSISTOR 2SC1623	
Q724	8-729-100-66	TRANSISTOR 2SC1623	
Q725	8-729-100-66	TRANSISTOR 2SC1623	
Q726	8-729-100-66	TRANSISTOR 2SC1623	
Q727	8-729-216-22	TRANSISTOR 2SA1162	
Q901	8-729-901-01	TRANSISTOR DTC144EK	
Q902	8-729-901-01	TRANSISTOR DTC144EK	
Q903	8-729-901-01	TRANSISTOR DTC144EK	
Q904	8-729-901-01	TRANSISTOR DTC144EK	
Q905	8-729-901-05	TRANSISTOR DTA124EK	
Q906	8-729-100-66	TRANSISTOR 2SC1623	
Q907	8-729-100-66	TRANSISTOR 2SC1623	
Q908	8-729-100-66	TRANSISTOR 2SC1623	
Q909	8-729-100-66	TRANSISTOR 2SC1623	
Q910	8-729-100-66	TRANSISTOR 2SC1623	
Q911	8-729-901-06	TRANSISTOR DTA144EK	
		(RESISTOR)	
R001	1-216-113-00	METAL CHIP 470K 5% 1/10W	
R002	1-216-091-00	METAL CHIP 56K 5% 1/10W	
R003	1-216-095-00	METAL CHIP 82K 5% 1/10W	
R005	1-216-748-11	METAL CHIP 39K 5% 1/10W	
R018	1-216-049-00	METAL CHIP 1K 5% 1/10W	
R019	1-216-089-00	METAL CHIP 47K 5% 1/10W	
R020	1-216-079-00	METAL CHIP 18K 5% 1/10W	
R021	1-216-086-00	METAL GLAZE 36K 5% 1/10W	
R022	1-216-083-00	METAL CHIP 27K 5% 1/10W	
R023	1-216-073-00	METAL CHIP 10K 5% 1/10W	
R024	1-216-061-00	METAL CHIP 3.3K 5% 1/10W	
R025	1-216-295-00	METAL CHIP 0 5% 1/10W	
R026	1-216-071-00	METAL CHIP 8.2K 5% 1/10W	
R027	1-216-089-00	METAL CHIP 47K 5% 1/10W	
R028	1-216-073-00	METAL CHIP 10K 5% 1/10W	
R029	1-216-073-00	METAL CHIP 10K 5% 1/10W	
R030	1-216-095-00	METAL CHIP 82K 5% 1/10W	
R031	1-216-073-00	METAL CHIP 10K 5% 1/10W	
R032	1-216-091-00	METAL CHIP 56K 5% 1/10W	
R033	1-216-049-00	METAL CHIP 1K 5% 1/10W	
R034	1-216-094-00	METAL GLAZE 75K 5% 1/10W	
R035	1-216-057-00	METAL CHIP 2.2K 5% 1/10W	
R036	1-216-093-00	METAL CHIP 68K 5% 1/10W	
R038	1-216-049-00	METAL CHIP 1K 5% 1/10W	
R039	1-216-073-00	METAL CHIP 10K 5% 1/10W	
R040	1-216-065-00	METAL CHIP 4.7K 5% 1/10W	
R041	1-216-065-00	METAL CHIP 4.7K 5% 1/10W	
R042	1-216-113-00	METAL CHIP 470K 5% 1/10W	
R043	1-216-075-00	METAL CHIP 12K 5% 1/10W	
R044	1-216-059-00	METAL CHIP 2.7K 5% 1/10W	
R045	1-216-057-00	METAL CHIP 2.2K 5% 1/10W	
R046	1-216-073-00	METAL CHIP 10K 5% 1/10W	
R051	1-216-113-00	METAL CHIP 470K 5% 1/10W	
R052	1-216-091-00	METAL CHIP 56K 5% 1/10W	
R053	1-216-095-00	METAL CHIP 82K 5% 1/10W	
R055	1-216-748-11	METAL CHIP 39K 5% 1/10W	
R068	1-216-049-00	METAL CHIP 1K 5% 1/10W	
R069	1-216-089-00	METAL CHIP 47K 5% 1/10W	
R070	1-216-079-00	METAL CHIP 18K 5% 1/10W	
R071	1-216-086-00	METAL GLAZE 36K 5% 1/10W	
R072	1-216-083-00	METAL CHIP 27K 5% 1/10W	
R073	1-216-073-00	METAL CHIP 10K 5% 1/10W	
R074	1-216-061-00	METAL CHIP 3.3K 5% 1/10W	
R075	1-216-295-00	METAL CHIP 0 5% 1/10W	
R076	1-216-071-00	METAL CHIP 8.2K 5% 1/10W	

IF-20

Ref. No.	Part No.	Description				Remark
R077	1-216-089-00	METAL CHIP	47K	5%	1/10W	
R078	1-216-073-00	METAL CHIP	10K	5%	1/10W	
R079	1-216-073-00	METAL CHIP	10K	5%	1/10W	
R080	1-216-095-00	METAL CHIP	82K	5%	1/10W	
R081	1-216-073-00	METAL CHIP	10K	5%	1/10W	
R082	1-216-091-00	METAL CHIP	56K	5%	1/10W	
R083	1-216-049-00	METAL CHIP	1K	5%	1/10W	
R084	1-216-094-00	METAL GLAZE	75K	5%	1/10W	
R085	1-216-057-00	METAL CHIP	2.2K	5%	1/10W	
R086	1-216-093-00	METAL CHIP	68K	5%	1/10W	
R088	1-216-049-00	METAL CHIP	1K	5%	1/10W	
R089	1-216-073-00	METAL CHIP	10K	5%	1/10W	
R090	1-216-065-00	METAL CHIP	4.7K	5%	1/10W	
R091	1-216-065-00	METAL CHIP	4.7K	5%	1/10W	
R092	1-216-113-00	METAL CHIP	470K	5%	1/10W	
R093	1-216-091-00	METAL CHIP	56K	5%	1/10W	
R094	1-216-091-00	METAL CHIP	56K	5%	1/10W	
R095	1-216-083-00	METAL CHIP	27K	5%	1/10W	
R104	1-216-097-00	METAL CHIP	100K	5%	1/10W	
R106	1-216-295-00	METAL CHIP	0	5%	1/10W	
R109	1-216-089-00	METAL CHIP	47K	5%	1/10W	
R110	1-216-061-00	METAL CHIP	3.3K	5%	1/10W	
R111	1-216-061-00	METAL CHIP	3.3K	5%	1/10W	
R112	1-216-093-00	METAL CHIP	68K	5%	1/10W	
R113	1-216-295-00	METAL CHIP	0	5%	1/10W	
R115	1-216-049-00	METAL CHIP	1K	5%	1/10W	
R116	1-216-089-00	METAL CHIP	47K	5%	1/10W	
R118	1-216-067-00	METAL CHIP	5.6K	5%	1/10W	
R119	1-216-077-00	METAL CHIP	15K	5%	1/10W	
R120	1-216-071-00	METAL CHIP	8.2K	5%	1/10W	
R121	1-216-057-00	METAL CHIP	2.2K	5%	1/10W	
R122	1-216-089-00	METAL CHIP	47K	5%	1/10W	
R123	1-216-073-00	METAL CHIP	10K	5%	1/10W	
R125	1-216-079-00	METAL CHIP	18K	5%	1/10W	
R126	1-216-067-00	METAL CHIP	5.6K	5%	1/10W	
R127	1-216-057-00	METAL CHIP	2.2K	5%	1/10W	
R128	1-216-089-00	METAL CHIP	47K	5%	1/10W	
R129	1-216-113-00	METAL CHIP	470K	5%	1/10W	
R130	1-216-295-00	METAL CHIP	0	5%	1/10W	
R134	1-216-049-00	METAL CHIP	1K	5%	1/10W	
R136	1-216-295-00	METAL CHIP	0	5%	1/10W	
R139	1-216-089-00	METAL CHIP	47K	5%	1/10W	
R140	1-216-061-00	METAL CHIP	3.3K	5%	1/10W	
R141	1-216-061-00	METAL CHIP	3.3K	5%	1/10W	
R142	1-216-093-00	METAL CHIP	68K	5%	1/10W	
R143	1-216-295-00	METAL CHIP	0	5%	1/10W	
R145	1-216-049-00	METAL CHIP	1K	5%	1/10W	
R146	1-216-089-00	METAL CHIP	47K	5%	1/10W	
R148	1-216-067-00	METAL CHIP	5.6K	5%	1/10W	
R149	1-216-077-00	METAL CHIP	15K	5%	1/10W	
R150	1-216-071-00	METAL CHIP	8.2K	5%	1/10W	
R151	1-216-057-00	METAL CHIP	2.2K	5%	1/10W	
R152	1-216-089-00	METAL CHIP	47K	5%	1/10W	
R153	1-216-073-00	METAL CHIP	10K	5%	1/10W	
R155	1-216-079-00	METAL CHIP	18K	5%	1/10W	
R156	1-216-067-00	METAL CHIP	5.6K	5%	1/10W	
R157	1-216-057-00	METAL CHIP	2.2K	5%	1/10W	
R160	1-216-295-00	METAL CHIP	0	5%	1/10W	
R165	1-216-049-00	METAL CHIP	1K	5%	1/10W	
R166	1-216-049-00	METAL CHIP	1K	5%	1/10W	
R167	1-216-097-00	METAL CHIP	100K	5%	1/10W	
R168	1-216-097-00	METAL CHIP	100K	5%	1/10W	
R169	1-216-073-00	METAL CHIP	10K	5%	1/10W	
R170	1-216-025-00	METAL CHIP	100	5%	1/10W	
R171	1-216-089-00	METAL CHIP	47K	5%	1/10W	
R172	1-216-097-00	METAL CHIP	100K	5%	1/10W	
R173	1-216-089-00	METAL CHIP	47K	5%	1/10W	
R174	1-216-049-00	METAL CHIP	1K	5%	1/10W	
R175	1-216-065-00	METAL CHIP	4.7K	5%	1/10W	
R176	1-216-065-00	METAL CHIP	4.7K	5%	1/10W	
R177	1-216-073-00	METAL CHIP	10K	5%	1/10W	
R178	1-216-073-00	METAL CHIP	10K	5%	1/10W	
R179	1-216-073-00	METAL CHIP	10K	5%	1/10W	
R180	1-216-073-00	METAL CHIP	10K	5%	1/10W	
R181	1-216-105-00	METAL CHIP	220K	5%	1/10W	
R182	1-216-105-00	METAL CHIP	220K	5%	1/10W	
R183	1-216-073-00	METAL CHIP	10K	5%	1/10W	
R184	1-216-083-00	METAL CHIP	27K	5%	1/10W	
R185	1-216-105-00	METAL CHIP	220K	5%	1/10W	
R186	1-216-105-00	METAL CHIP	220K	5%	1/10W	
R187	1-216-073-00	METAL CHIP	10K	5%	1/10W	
R188	1-216-073-00	METAL CHIP	10K	5%	1/10W	
R189	1-216-089-00	METAL CHIP	47K	5%	1/10W	
R190	1-216-089-00	METAL CHIP	47K	5%	1/10W	

Ref. No.	Part No.	Description				Remark
R192	1-216-049-00	METAL CHIP	1K	5%	1/10W	
R193	1-216-097-00	METAL CHIP	100K	5%	1/10W	
R201	1-216-081-00	METAL CHIP	22K	5%	1/10W	
R202	1-216-075-00	METAL CHIP	12K	5%	1/10W	
R203	1-216-031-00	METAL CHIP	180	5%	1/10W	
R204	1-216-081-00	METAL CHIP	22K	5%	1/10W	
R205	1-216-077-00	METAL CHIP	15K	5%	1/10W	
R206	1-216-043-00	METAL CHIP	560	5%	1/10W	
R207	1-216-043-00	METAL CHIP	560	5%	1/10W	
R208	1-216-043-00	METAL CHIP	560	5%	1/10W	
R209	1-216-043-00	METAL CHIP	560	5%	1/10W	
R210	1-216-043-00	METAL CHIP	560	5%	1/10W	
R211	1-216-043-00	METAL CHIP	560	5%	1/10W	
R212	1-216-081-00	METAL CHIP	22K	5%	1/10W	
R213	1-216-075-00	METAL CHIP	12K	5%	1/10W	
R214	1-216-051-00	METAL CHIP	1.2K	5%	1/10W	
R215	1-216-051-00	METAL CHIP	1.2K	5%	1/10W	
R216	1-216-038-00	METAL CHIP	360	5%	1/10W	
R217	1-216-079-00	METAL CHIP	18K	5%	1/10W	
R218	1-216-077-00	METAL CHIP	15K	5%	1/10W	
R219	1-216-051-00	METAL CHIP	1.2K	5%	1/10W	
R220	1-216-051-00	METAL CHIP	1.2K	5%	1/10W	
R221	1-216-049-00	METAL CHIP	1K	5%	1/10W	
R222	1-216-295-00	METAL CHIP	0	5%	1/10W	
R223	1-216-053-00	METAL CHIP	1.5K	5%	1/10W	
R224	1-216-041-00	METAL CHIP	470	5%	1/10W	
R225	1-216-049-00	METAL CHIP	1K	5%	1/10W	
R226	1-216-073-00	METAL CHIP	10K	5%	1/10W	
R227	1-216-065-00	METAL CHIP	4.7K	5%	1/10W	
R228	1-216-645-11	METAL CHIP	560	0.5%	1/10W	
R229	1-216-645-11	METAL CHIP	560	0.5%	1/10W	
R230	1-216-041-00	METAL CHIP	470	5%	1/10W	
R231	1-216-041-00	METAL CHIP	470	5%	1/10W	
R232	1-216-047-00	METAL CHIP	820	5%	1/10W	
R233	1-216-049-00	METAL CHIP	1K	5%	1/10W	
R234	1-216-037-00	METAL CHIP	330	5%	1/10W	
R235	1-216-033-00	METAL CHIP	220	5%	1/10W	
R236	1-216-033-00	METAL CHIP	220	5%	1/10W	
R237	1-216-037-00	METAL CHIP	330	5%	1/10W	
R238	1-216-049-00	METAL CHIP	1K	5%	1/10W	
R239	1-216-047-00	METAL CHIP	820	5%	1/10W	

Ref. No.	Part No.	Description				Remark
R240	1-216-047-00	METAL CHIP	820	5%	1/10W	
R241	1-216-053-00	METAL CHIP	1.5K	5%	1/10W	
R242	1-216-073-00	METAL CHIP	10K	5%	1/10W	
R243	1-216-111-00	METAL CHIP	390K	5%	1/10W	
R244	1-216-041-00	METAL CHIP	470	5%	1/10W	
R245	1-216-051-00	METAL CHIP	1.2K	5%	1/10W	
R246	1-216-043-00	METAL CHIP	560	5%	1/10W	
R247	1-216-079-00	METAL CHIP	18K	5%	1/10W	
R248	1-216-077-00	METAL CHIP	15K	5%	1/10W	
R249	1-216-049-00	METAL CHIP	1K	5%	1/10W	
R250	1-216-051-00	METAL CHIP	1.2K	5%	1/10W	
R251	1-216-049-00	METAL CHIP	1K	5%	1/10W	
R252	1-216-045-00	METAL CHIP	680	5%	1/10W	
R253	1-216-047-00	METAL CHIP	820	5%	1/10W	
R254	1-216-047-00	METAL CHIP	820	5%	1/10W	
R255	1-216-073-00	METAL CHIP	10K	5%	1/10W	
R256	1-216-067-00	METAL CHIP	5.6K	5%	1/10W	
R257	1-216-649-11	METAL CHIP	820	0.5%	1/10W	
R258	1-216-649-11	METAL CHIP	820	0.5%	1/10W	
R259	1-216-041-00	METAL CHIP	470	5%	1/10W	
R260	1-216-041-00	METAL CHIP	470	5%	1/10W	
R261	1-216-049-00	METAL CHIP	1K	5%	1/10W	
R262	1-216-061-00	METAL CHIP	3.3K	5%	1/10W	
R263	1-216-044-00	METAL CHIP	620	5%	1/10W	
R264	1-216-049-00	METAL CHIP	1K	5%	1/10W	
R265	1-216-041-00	METAL CHIP	470	5%	1/10W	
R266	1-216-077-00	METAL CHIP	15K	5%	1/10W	
R267	1-216-073-00	METAL CHIP	10K	5%	1/10W	
R268	1-216-049-00	METAL CHIP	1K	5%	1/10W	
R269	1-216-049-00	METAL CHIP	1K	5%	1/10W	
R270	1-216-057-00	METAL CHIP	2.2K	5%	1/10W	
R271	1-216-071-00	METAL CHIP	8.2K	5%	1/10W	
R272	1-216-073-00	METAL CHIP	10K	5%	1/10W	
R273	1-216-043-00	METAL CHIP	560	5%	1/10W	
R274	1-216-043-00	METAL CHIP	560	5%	1/10W	
R275	1-216-045-00	METAL CHIP	680	5%	1/10W	
R276	1-216-045-00	METAL CHIP	680	5%	1/10W	
R283	1-216-041-00	METAL CHIP	470	5%	1/10W	
R284	1-216-045-00	METAL CHIP	680	5%	1/10W	
R285	1-216-055-00	METAL CHIP	1.8K	5%	1/10W	
R286	1-216-051-00	METAL CHIP	1.2K	5%	1/10W	
R287	1-216-077-00	METAL CHIP	15K	5%	1/10W	

IF-20

Ref. No.	Part No.	Description				Remark
R288	1-216-079-00	METAL CHIP	18K	5%	1/10W	
R289	1-216-083-00	METAL CHIP	27K	5%	1/10W	
R290	1-216-079-00	METAL CHIP	18K	5%	1/10W	
R291	1-216-045-00	METAL CHIP	680	5%	1/10W	
R292	1-216-045-00	METAL CHIP	680	5%	1/10W	
R293	1-216-073-00	METAL CHIP	10K	5%	1/10W	
R294	1-216-073-00	METAL CHIP	10K	5%	1/10W	
R295	1-216-069-00	METAL CHIP	6.8K	5%	1/10W	
R296	1-216-075-00	METAL CHIP	12K	5%	1/10W	
R297	1-216-081-00	METAL CHIP	22K	5%	1/10W	
R298	1-216-075-00	METAL CHIP	12K	5%	1/10W	
R299	1-216-075-00	METAL CHIP	12K	5%	1/10W	
R300	1-216-059-00	METAL CHIP	2.7K	5%	1/10W	
R301	1-216-063-00	METAL CHIP	3.9K	5%	1/10W	
R302	1-216-069-00	METAL CHIP	6.8K	5%	1/10W	
R303	1-216-075-00	METAL CHIP	12K	5%	1/10W	
R304	1-216-073-00	METAL CHIP	10K	5%	1/10W	
R305	1-216-073-00	METAL CHIP	10K	5%	1/10W	
R307	1-216-041-00	METAL CHIP	470	5%	1/10W	
R308	1-216-045-00	METAL CHIP	680	5%	1/10W	
R309	1-216-049-00	METAL CHIP	1K	5%	1/10W	
R310	1-216-051-00	METAL CHIP	1.2K	5%	1/10W	
R311	1-216-077-00	METAL CHIP	15K	5%	1/10W	
R312	1-216-079-00	METAL CHIP	18K	5%	1/10W	
R313	1-216-083-00	METAL CHIP	27K	5%	1/10W	
R314	1-216-079-00	METAL CHIP	18K	5%	1/10W	
R315	1-216-045-00	METAL CHIP	680	5%	1/10W	
R316	1-216-045-00	METAL CHIP	680	5%	1/10W	
R317	1-216-073-00	METAL CHIP	10K	5%	1/10W	
R318	1-216-073-00	METAL CHIP	10K	5%	1/10W	
R319	1-216-083-00	METAL CHIP	27K	5%	1/10W	
R320	1-216-049-00	METAL CHIP	1K	5%	1/10W	
R321	1-216-055-00	METAL CHIP	1.8K	5%	1/10W	
R322	1-216-081-00	METAL CHIP	22K	5%	1/10W	
R330	1-216-049-00	METAL CHIP	1K	5%	1/10W	
R331	1-216-077-00	METAL CHIP	15K	5%	1/10W	
R332	1-216-081-00	METAL CHIP	22K	5%	1/10W	
R333	1-216-041-00	METAL CHIP	470	5%	1/10W	
R334	1-216-737-11	METAL GLAZE	1K	1%	1/10W	
R335	1-216-518-00	METAL GLAZE	2.2K	1%	1/10W	
R336	1-218-149-11	METAL GLAZE	1.1K	1%	1/10W	
R337	1-216-077-00	METAL CHIP	15K	5%	1/10W	
R338	1-216-081-00	METAL CHIP	22K	5%	1/10W	
R339	1-216-057-00	METAL CHIP	2.2K	5%	1/10W	
R340	1-216-033-00	METAL CHIP	220	5%	1/10W	
R341	1-216-295-00	METAL CHIP	0	5%	1/10W	
R342	1-216-079-00	METAL CHIP	18K	5%	1/10W	
R343	1-216-075-00	METAL CHIP	12K	5%	1/10W	
R344	1-216-295-00	METAL CHIP	0	5%	1/10W	
R345	1-216-041-00	METAL CHIP	470	5%	1/10W	
R346	1-216-041-00	METAL CHIP	470	5%	1/10W	
R348	1-216-043-00	METAL CHIP	560	5%	1/10W	
R349	1-216-043-00	METAL CHIP	560	5%	1/10W	
R350	1-216-079-00	METAL CHIP	18K	5%	1/10W	
R351	1-216-075-00	METAL CHIP	12K	5%	1/10W	
R352	1-216-059-00	METAL CHIP	2.7K	5%	1/10W	
R353	1-216-737-11	METAL GLAZE	1K	1%	1/10W	
R354	1-218-152-11	METAL GLAZE	1.5K	1%	1/10W	
R355	1-216-079-00	METAL CHIP	18K	5%	1/10W	
R356	1-216-075-00	METAL CHIP	12K	5%	1/10W	
R357	1-216-295-00	METAL CHIP	0	5%	1/10W	
R358	1-216-041-00	METAL CHIP	470	5%	1/10W	
R359	1-216-041-00	METAL CHIP	470	5%	1/10W	
R361	1-216-042-00	METAL CHIP	510	5%	1/10W	
R362	1-216-043-00	METAL CHIP	560	5%	1/10W	
R363	1-216-079-00	METAL CHIP	18K	5%	1/10W	
R364	1-216-075-00	METAL CHIP	12K	5%	1/10W	
R365	1-216-059-00	METAL CHIP	2.7K	5%	1/10W	
R366	1-216-049-00	METAL CHIP	1K	5%	1/10W	
R367	1-216-079-00	METAL CHIP	18K	5%	1/10W	
R368	1-216-079-00	METAL CHIP	18K	5%	1/10W	
R369	1-216-049-00	METAL CHIP	1K	5%	1/10W	
R370	1-216-049-00	METAL CHIP	1K	5%	1/10W	
R371	1-216-077-00	METAL CHIP	15K	5%	1/10W	
R372	1-216-081-00	METAL CHIP	22K	5%	1/10W	
R373	1-216-049-00	METAL CHIP	1K	5%	1/10W	
R374	1-216-737-11	METAL GLAZE	1K	1%	1/10W	
R375	1-218-150-11	METAL GLAZE	1.2K	1%	1/10W	
R376	1-216-079-00	METAL CHIP	18K	5%	1/10W	
R377	1-216-075-00	METAL CHIP	12K	5%	1/10W	
R378	1-216-041-00	METAL CHIP	470	5%	1/10W	
R379	1-216-295-00	METAL CHIP	0	5%	1/10W	
R380	1-216-041-00	METAL CHIP	470	5%	1/10W	

Ref. No.	Part No.	Description				Remark
R382	1-216-041-00	METAL CHIP	470	5%	1/10W	
R383	1-216-043-00	METAL CHIP	560	5%	1/10W	
R384	1-216-079-00	METAL CHIP	18K	5%	1/10W	
R385	1-216-075-00	METAL CHIP	12K	5%	1/10W	
R386	1-216-059-00	METAL CHIP	2.7K	5%	1/10W	
R391	1-216-025-00	METAL CHIP	100	5%	1/10W	
R392	1-216-025-00	METAL CHIP	100	5%	1/10W	
R393	1-216-025-00	METAL CHIP	100	5%	1/10W	
R401	1-216-723-11	METAL GLAZE	5.6K	1%	1/10W	
R402	1-216-737-11	METAL GLAZE	1K	1%	1/10W	
R403	1-216-737-11	METAL GLAZE	1K	1%	1/10W	
R404	1-216-081-00	METAL CHIP	22K	5%	1/10W	
R405	1-216-075-00	METAL CHIP	12K	5%	1/10W	
R406	1-216-041-00	METAL CHIP	470	5%	1/10W	
R408	1-218-142-11	METAL GLAZE	470	1%	1/10W	
R409	1-216-631-11	METAL CHIP	150	0.5%	1/10W	
R410	1-216-737-11	METAL GLAZE	1K	1%	1/10W	
R411	1-216-043-00	METAL CHIP	560	5%	1/10W	
R412	1-216-081-00	METAL CHIP	22K	5%	1/10W	
R413	1-216-075-00	METAL CHIP	12K	5%	1/10W	
R414	1-216-057-00	METAL CHIP	2.2K	5%	1/10W	
R415	1-216-077-00	METAL CHIP	15K	5%	1/10W	
R416	1-216-073-00	METAL CHIP	10K	5%	1/10W	
R417	1-216-041-00	METAL CHIP	470	5%	1/10W	
R418	1-216-041-00	METAL CHIP	470	5%	1/10W	
R419	1-216-045-00	METAL CHIP	680	5%	1/10W	
R420	1-216-043-00	METAL CHIP	560	5%	1/10W	
R421	1-216-077-00	METAL CHIP	15K	5%	1/10W	
R422	1-216-073-00	METAL CHIP	10K	5%	1/10W	
R423	1-216-059-00	METAL CHIP	2.7K	5%	1/10W	
R424	1-216-049-00	METAL CHIP	1K	5%	1/10W	
R425	1-216-081-00	METAL CHIP	22K	5%	1/10W	
R426	1-216-075-00	METAL CHIP	12K	5%	1/10W	
R427	1-216-041-00	METAL CHIP	470	5%	1/10W	
R428	1-218-142-11	METAL GLAZE	470	1%	1/10W	
R429	1-216-295-00	METAL CHIP	0	5%	1/10W	
R430	1-216-737-11	METAL GLAZE	1K	1%	1/10W	
R431	1-216-043-00	METAL CHIP	560	5%	1/10W	
R432	1-216-081-00	METAL CHIP	22K	5%	1/10W	
R433	1-216-075-00	METAL CHIP	12K	5%	1/10W	
R434	1-216-057-00	METAL CHIP	2.2K	5%	1/10W	
R435	1-216-077-00	METAL CHIP	15K	5%	1/10W	

Ref. No.	Part No.	Description				Remark
R436	1-216-073-00	METAL CHIP	10K	5%	1/10W	
R437	1-216-041-00	METAL CHIP	470	5%	1/10W	
R438	1-216-041-00	METAL CHIP	470	5%	1/10W	
R439	1-216-045-00	METAL CHIP	680	5%	1/10W	
R440	1-216-043-00	METAL CHIP	560	5%	1/10W	
R441	1-216-077-00	METAL CHIP	15K	5%	1/10W	
R442	1-216-073-00	METAL CHIP	10K	5%	1/10W	
R443	1-216-059-00	METAL CHIP	2.7K	5%	1/10W	
R444	1-216-049-00	METAL CHIP	1K	5%	1/10W	
R445	1-216-081-00	METAL CHIP	22K	5%	1/10W	
R446	1-216-081-00	METAL CHIP	22K	5%	1/10W	
R447	1-216-081-00	METAL CHIP	22K	5%	1/10W	
R448	1-216-081-00	METAL CHIP	22K	5%	1/10W	
R501	1-216-079-00	METAL CHIP	18K	5%	1/10W	
R502	1-216-081-00	METAL CHIP	22K	5%	1/10W	
R503	1-216-049-00	METAL CHIP	1K	5%	1/10W	
R504	1-218-156-11	METAL GLAZE	8.2K	1%	1/10W	
R505	1-216-737-11	METAL GLAZE	1K	1%	1/10W	
R506	1-216-327-11	METAL GLAZE	2K	1%	1/10W	
R507	1-216-327-11	METAL GLAZE	2K	1%	1/10W	
R508	1-216-047-00	METAL CHIP	820	5%	1/10W	
R509	1-216-295-00	METAL CHIP	0	5%	1/10W	
R510	1-216-049-00	METAL CHIP	1K	5%	1/10W	
R511	1-216-737-11	METAL GLAZE	1K	1%	1/10W	
R512	1-216-295-00	METAL CHIP	0	5%	1/10W	
R513	1-216-518-00	METAL GLAZE	2.2K	1%	1/10W	
R514	1-216-057-00	METAL CHIP	2.2K	5%	1/10W	
R515	1-216-079-00	METAL CHIP	18K	5%	1/10W	
R516	1-216-079-00	METAL CHIP	18K	5%	1/10W	
R517	1-216-049-00	METAL CHIP	1K	5%	1/10W	
R518	1-218-156-11	METAL GLAZE	8.2K	1%	1/10W	
R519	1-216-737-11	METAL GLAZE	1K	1%	1/10W	
R520	1-216-327-11	METAL GLAZE	2K	1%	1/10W	
R521	1-216-327-11	METAL GLAZE	2K	1%	1/10W	
R522	1-216-047-00	METAL CHIP	820	5%	1/10W	
R523	1-216-295-00	METAL CHIP	0	5%	1/10W	
R524	1-216-049-00	METAL CHIP	1K	5%	1/10W	
R525	1-216-737-11	METAL GLAZE	1K	1%	1/10W	
R526	1-216-295-00	METAL CHIP	0	5%	1/10W	
R527	1-216-518-00	METAL GLAZE	2.2K	1%	1/10W	
R528	1-216-057-00	METAL CHIP	2.2K	5%	1/10W	
R529	1-216-079-00	METAL CHIP	18K	5%	1/10W	

IF-20

Ref. No.	Part No.	Description				Remark
R530	1-216-079-00	METAL CHIP	18K	5%	1/10W	
R531	1-216-049-00	METAL CHIP	1K	5%	1/10W	
R532	1-216-049-00	METAL CHIP	1K	5%	1/10W	
R533	1-216-621-11	METAL CHIP	56	0.50%	1/10W	
R534	1-216-737-11	METAL GLAZE	1K	1%	1/10W	
R535	1-216-079-00	METAL CHIP	18K	5%	1/10W	
R536	1-216-079-00	METAL CHIP	18K	5%	1/10W	
R537	1-216-051-00	METAL CHIP	1.2K	5%	1/10W	
R538	1-216-057-00	METAL CHIP	2.2K	5%	1/10W	
R539	1-216-065-00	METAL CHIP	4.7K	5%	1/10W	
R540	1-216-295-00	METAL CHIP	0	5%	1/10W	
R541	1-216-069-00	METAL CHIP	6.8K	5%	1/10W	
R542	1-216-065-00	METAL CHIP	4.7K	5%	1/10W	
R543	1-216-051-00	METAL CHIP	1.2K	5%	1/10W	
R544	1-216-057-00	METAL CHIP	2.2K	5%	1/10W	
R545	1-216-518-00	METAL GLAZE	2.2K	1%	1/10W	
R546	1-216-518-00	METAL GLAZE	2.2K	1%	1/10W	
R547	1-216-079-00	METAL CHIP	18K	5%	1/10W	
R548	1-216-081-00	METAL CHIP	22K	5%	1/10W	
R549	1-216-049-00	METAL CHIP	1K	5%	1/10W	
R550	1-218-156-11	METAL GLAZE	8.2K	1%	1/10W	
R551	1-216-737-11	METAL GLAZE	1K	1%	1/10W	
R552	1-216-327-11	METAL GLAZE	2K	1%	1/10W	
R553	1-216-327-11	METAL GLAZE	2K	1%	1/10W	
R554	1-216-047-00	METAL CHIP	820	5%	1/10W	
R555	1-216-295-00	METAL CHIP	0	5%	1/10W	
R556	1-216-049-00	METAL CHIP	1K	5%	1/10W	
R557	1-216-295-00	METAL CHIP	0	5%	1/10W	
R558	1-216-737-11	METAL GLAZE	1K	1%	1/10W	
R559	1-216-518-00	METAL GLAZE	2.2K	1%	1/10W	
R560	1-216-057-00	METAL CHIP	2.2K	5%	1/10W	
R561	1-216-079-00	METAL CHIP	18K	5%	1/10W	
R562	1-216-079-00	METAL CHIP	18K	5%	1/10W	
R563	1-216-049-00	METAL CHIP	1K	5%	1/10W	
R564	1-216-333-11	METAL CHIP	15K	1%	1/10W	
R601	1-216-073-00	METAL CHIP	10K	5%	1/10W	
R602	1-216-073-00	METAL CHIP	10K	5%	1/10W	
R603	1-216-057-00	METAL CHIP	2.2K	5%	1/10W	
R605	1-216-073-00	METAL CHIP	10K	5%	1/10W	
R606	1-216-041-00	METAL CHIP	470	5%	1/10W	
R607	1-216-037-00	METAL CHIP	330	5%	1/10W	

Ref. No.	Part No.	Description				Remark
R608	1-216-049-00	METAL CHIP	1K	5%	1/10W	
R609	1-216-049-00	METAL CHIP	1K	5%	1/10W	
R610	1-216-073-00	METAL CHIP	10K	5%	1/10W	
R611	1-216-071-00	METAL CHIP	8.2K	5%	1/10W	
R612	1-216-065-00	METAL CHIP	4.7K	5%	1/10W	
R613	1-216-049-00	METAL CHIP	1K	5%	1/10W	
R614	1-216-037-00	METAL CHIP	330	5%	1/10W	
R615	1-216-041-00	METAL CHIP	470	5%	1/10W	
R616	1-216-073-00	METAL CHIP	10K	5%	1/10W	
R617	1-216-048-00	METAL CHIP	910	5%	1/10W	
R618	1-216-049-00	METAL CHIP	1K	5%	1/10W	
R619	1-216-049-00	METAL CHIP	1K	5%	1/10W	
R620	1-216-071-00	METAL CHIP	8.2K	5%	1/10W	
R621	1-216-073-00	METAL CHIP	10K	5%	1/10W	
R622	1-216-065-00	METAL CHIP	4.7K	5%	1/10W	
R623	1-216-059-00	METAL CHIP	2.7K	5%	1/10W	
R624	1-216-077-00	METAL CHIP	15K	5%	1/10W	
R625	1-216-073-00	METAL CHIP	10K	5%	1/10W	
R626	1-216-039-00	METAL CHIP	390	5%	1/10W	
R627	1-216-041-00	METAL CHIP	470	5%	1/10W	
R628	1-216-057-00	METAL CHIP	2.2K	5%	1/10W	
R629	1-216-037-00	METAL CHIP	330	5%	1/10W	
R632	1-216-053-00	METAL CHIP	1.5K	5%	1/10W	
R633	1-216-061-00	METAL CHIP	3.3K	5%	1/10W	
R634	1-216-061-00	METAL CHIP	3.3K	5%	1/10W	
R635	1-216-031-00	METAL CHIP	180	5%	1/10W	
R636	1-216-057-00	METAL CHIP	2.2K	5%	1/10W	
R637	1-216-077-00	METAL CHIP	15K	5%	1/10W	
R638	1-216-073-00	METAL CHIP	10K	5%	1/10W	
R639	1-216-041-00	METAL CHIP	470	5%	1/10W	
R640	1-216-051-00	METAL CHIP	1.2K	5%	1/10W	
R641	1-216-059-00	METAL CHIP	2.7K	5%	1/10W	
R642	1-216-093-00	METAL CHIP	68K	5%	1/10W	
R643	1-216-043-00	METAL CHIP	560	5%	1/10W	
R644	1-216-055-00	METAL CHIP	1.8K	5%	1/10W	
R645	1-216-065-00	METAL CHIP	4.7K	5%	1/10W	
R646	1-216-053-00	METAL CHIP	1.5K	5%	1/10W	
R701	1-216-081-00	METAL CHIP	22K	5%	1/10W	
R702	1-216-073-00	METAL CHIP	10K	5%	1/10W	
R703	1-216-049-00	METAL CHIP	1K	5%	1/10W	
R704	1-216-036-00	METAL CHIP	300	5%	1/10W	
R705	1-216-045-00	METAL CHIP	680	5%	1/10W	

Ref. No.	Part No.	Description				Remark
R706	1-216-049-00	METAL CHIP	1K	5%	1/10W	
R707	1-216-041-00	METAL CHIP	470	5%	1/10W	
R708	1-216-052-00	METAL CHIP	1.3K	5%	1/10W	
R709	1-216-049-00	METAL CHIP	1K	5%	1/10W	
R710	1-216-033-00	METAL CHIP	220	5%	1/10W	
R711	1-216-049-00	METAL CHIP	1K	5%	1/10W	
R712	1-216-051-00	METAL CHIP	1.2K	5%	1/10W	
R713	1-216-043-00	METAL CHIP	560	5%	1/10W	
R714	1-216-065-00	METAL CHIP	4.7K	5%	1/10W	
R715	1-216-065-00	METAL CHIP	4.7K	5%	1/10W	
R716	1-216-635-11	METAL CHIP	220	0.5%	1/10W	
R717	1-216-635-11	METAL CHIP	220	0.5%	1/10W	
R718	1-216-049-00	METAL CHIP	1K	5%	1/10W	
R720	1-216-047-00	METAL CHIP	820	5%	1/10W	
R721	1-216-044-00	METAL CHIP	620	5%	1/10W	
R722	1-216-061-00	METAL CHIP	3.3K	5%	1/10W	
R723	1-216-295-00	METAL CHIP	0	5%	1/10W	
R724	1-216-075-00	METAL CHIP	12K	5%	1/10W	
R725	1-216-085-00	METAL CHIP	33K	5%	1/10W	
R726	1-216-065-00	METAL CHIP	4.7K	5%	1/10W	
R727	1-216-635-11	METAL CHIP	220	0.5%	1/10W	
R728	1-216-635-11	METAL CHIP	220	0.5%	1/10W	
R729	1-216-049-00	METAL CHIP	1K	5%	1/10W	
R730	1-216-047-00	METAL CHIP	820	5%	1/10W	
R732	1-216-041-00	METAL CHIP	470	5%	1/10W	
R733	1-216-061-00	METAL CHIP	3.3K	5%	1/10W	
R734	1-216-041-00	METAL CHIP	470	5%	1/10W	
R735	1-216-295-00	METAL CHIP	0	5%	1/10W	
R736	1-216-041-00	METAL CHIP	470	5%	1/10W	
R737	1-216-035-00	METAL CHIP	270	5%	1/10W	
R738	1-216-049-00	METAL CHIP	1K	5%	1/10W	
R739	1-216-049-00	METAL CHIP	1K	5%	1/10W	
R740	1-216-295-00	METAL CHIP	0	5%	1/10W	
R741	1-216-047-00	METAL CHIP	820	5%	1/10W	
R742	1-216-043-00	METAL CHIP	560	5%	1/10W	
R743	1-216-049-00	METAL CHIP	1K	5%	1/10W	
R744	1-216-081-00	METAL CHIP	22K	5%	1/10W	
R745	1-216-075-00	METAL CHIP	12K	5%	1/10W	
R746	1-216-045-00	METAL CHIP	680	5%	1/10W	
R747	1-216-043-00	METAL CHIP	560	5%	1/10W	
R748	1-216-049-00	METAL CHIP	1K	5%	1/10W	
R749	1-216-045-00	METAL CHIP	680	5%	1/10W	
R750	1-216-081-00	METAL CHIP	22K	5%	1/10W	
R751	1-216-083-00	METAL CHIP	27K	5%	1/10W	
R752	1-216-065-00	METAL CHIP	4.7K	5%	1/10W	
R753	1-216-075-00	METAL CHIP	12K	5%	1/10W	
R754	1-216-081-00	METAL CHIP	22K	5%	1/10W	
R755	1-216-065-00	METAL CHIP	4.7K	5%	1/10W	
R756	1-216-635-11	METAL CHIP	220	0.5%	1/10W	
R757	1-216-635-11	METAL CHIP	220	0.5%	1/10W	
R758	1-216-057-00	METAL CHIP	2.2K	5%	1/10W	
R759	1-216-053-00	METAL CHIP	1.5K	5%	1/10W	
R760	1-216-059-00	METAL CHIP	2.7K	5%	1/10W	
R761	1-216-061-00	METAL CHIP	3.3K	5%	1/10W	
R762	1-216-081-00	METAL CHIP	22K	5%	1/10W	
R763	1-216-073-00	METAL CHIP	10K	5%	1/10W	
R764	1-216-065-00	METAL CHIP	4.7K	5%	1/10W	
R765	1-216-041-00	METAL CHIP	470	5%	1/10W	
R767	1-216-057-00	METAL CHIP	2.2K	5%	1/10W	
R768	1-216-737-11	METAL GLAZE	1K	1%	1/10W	
R769	1-216-737-11	METAL GLAZE	1K	1%	1/10W	
R770	1-216-073-00	METAL CHIP	10K	5%	1/10W	
R771	1-216-071-00	METAL CHIP	8.2K	5%	1/10W	
R772	1-216-073-00	METAL CHIP	10K	5%	1/10W	
R773	1-216-737-11	METAL GLAZE	1K	1%	1/10W	
R774	1-216-737-11	METAL GLAZE	1K	1%	1/10W	
R775	1-216-081-00	METAL CHIP	22K	5%	1/10W	
R776	1-216-075-00	METAL CHIP	12K	5%	1/10W	
R777	1-216-049-00	METAL CHIP	1K	5%	1/10W	
R778	1-216-033-00	METAL CHIP	220	5%	1/10W	
R779	1-216-051-00	METAL CHIP	1.2K	5%	1/10W	
R780	1-216-049-00	METAL CHIP	1K	5%	1/10W	
R781	1-216-081-00	METAL CHIP	22K	5%	1/10W	
R782	1-216-075-00	METAL CHIP	12K	5%	1/10W	
R783	1-216-065-00	METAL CHIP	4.7K	5%	1/10W	
R784	1-216-081-00	METAL CHIP	22K	5%	1/10W	
R785	1-216-075-00	METAL CHIP	12K	5%	1/10W	
R786	1-216-049-00	METAL CHIP	1K	5%	1/10W	
R787	1-216-737-11	METAL GLAZE	1K	1%	1/10W	
R788	1-216-737-11	METAL GLAZE	1K	1%	1/10W	
R789	1-216-069-00	METAL CHIP	6.8K	5%	1/10W	
R790	1-216-033-00	METAL CHIP	220	5%	1/10W	
R793	1-216-295-00	METAL CHIP	0	5%	1/10W	

IF-20 **JB-4**

Ref. No.	Part No.	Description				Remark
R794	1-216-295-00	METAL CHIP	0	5%	1/10W	
R795	1-216-025-00	METAL CHIP	100	5%	1/10W	
R796	1-216-025-00	METAL CHIP	100	5%	1/10W	
R802	1-216-061-00	METAL CHIP	3.3K	5%	1/10W	
R803	1-216-061-00	METAL CHIP	3.3K	5%	1/10W	
R804	1-216-022-00	METAL CHIP	75	5%	1/10W	
R806	1-216-061-00	METAL CHIP	3.3K	5%	1/10W	
R807	1-216-061-00	METAL CHIP	3.3K	5%	1/10W	
R808	1-216-022-00	METAL CHIP	75	5%	1/10W	
R809	1-216-015-00	METAL CHIP	39	5%	1/10W	
R810	1-216-015-00	METAL CHIP	39	5%	1/10W	
R811	1-216-015-00	METAL CHIP	39	5%	1/10W	
R812	1-216-015-00	METAL CHIP	39	5%	1/10W	
R814	1-216-061-00	METAL CHIP	3.3K	5%	1/10W	
R815	1-216-061-00	METAL CHIP	3.3K	5%	1/10W	
R816	1-216-022-00	METAL CHIP	75	5%	1/10W	
R818	1-216-061-00	METAL CHIP	3.3K	5%	1/10W	
R819	1-216-061-00	METAL CHIP	3.3K	5%	1/10W	
R820	1-216-022-00	METAL CHIP	75	5%	1/10W	
R821	1-216-015-00	METAL CHIP	39	5%	1/10W	
R822	1-216-015-00	METAL CHIP	39	5%	1/10W	
R823	1-216-079-00	METAL CHIP	18K	5%	1/10W	
R824	1-216-085-00	METAL CHIP	33K	5%	1/10W	
R901	1-216-089-00	METAL CHIP	47K	5%	1/10W	
R902	1-216-089-00	METAL CHIP	47K	5%	1/10W	
R903	1-216-089-00	METAL CHIP	47K	5%	1/10W	
R904	1-216-089-00	METAL CHIP	47K	5%	1/10W	
R906	1-216-081-00	METAL CHIP	22K	5%	1/10W	
R907	1-216-081-00	METAL CHIP	22K	5%	1/10W	
R908	1-216-073-00	METAL CHIP	10K	5%	1/10W	
R909	1-216-049-00	METAL CHIP	1K	5%	1/10W	
R910	1-216-107-00	METAL CHIP	270K	5%	1/10W	
R911	1-216-073-00	METAL CHIP	10K	5%	1/10W	
R912	1-216-069-00	METAL CHIP	6.8K	5%	1/10W	
R913	1-216-073-00	METAL CHIP	10K	5%	1/10W	
R914	1-216-081-00	METAL CHIP	22K	5%	1/10W	
R915	1-216-081-00	METAL CHIP	22K	5%	1/10W	
R916	1-216-065-00	METAL CHIP	4.7K	5%	1/10W	
R917	1-216-025-00	METAL CHIP	100	5%	1/10W	
R918	1-216-057-00	METAL CHIP	2.2K	5%	1/10W	
R919	1-216-067-00	METAL CHIP	5.6K	5%	1/10W	
R920	1-216-031-00	METAL CHIP	180	5%	1/10W	
R921	1-216-065-00	METAL CHIP	4.7K	5%	1/10W	
R922	1-216-093-00	METAL CHIP	68K	5%	1/10W	
R923	1-216-091-00	METAL CHIP	56K	5%	1/10W	
R924	1-216-069-00	METAL CHIP	6.8K	5%	1/10W	
R925	1-216-061-00	METAL CHIP	3.3K	5%	1/10W	
R926	1-216-077-00	METAL CHIP	15K	5%	1/10W	
R927	1-216-085-00	METAL CHIP	33K	5%	1/10W	
R928	1-216-049-00	METAL CHIP	1K	5%	1/10W	
R929	1-216-065-00	METAL CHIP	4.7K	5%	1/10W	
		〈 VARIABLE RESISTOR 〉				
RV201	1-230-519-11	RES, ADJ, METAL 470				
RV202	1-230-520-11	RES, ADJ, METAL 1K				
RV203	1-230-520-11	RES, ADJ, METAL 1K				
RV204	1-230-519-11	RES, ADJ, METAL 470				
RV205	1-230-521-11	RES, ADJ, METAL 2.2K				
RV401	1-230-519-11	RES, ADJ, METAL 470				
RV402	1-230-519-11	RES, ADJ, METAL 470				
RV601	1-230-520-11	RES, ADJ, METAL 1K				
RV602	1-230-520-11	RES, ADJ, METAL 1K				
RV702	1-230-522-11	RES, ADJ, METAL 4.7K				
RV703	1-230-521-11	RES, ADJ, METAL 2.2K				
RV704	1-230-531-11	RES, ADJ, METAL GLAZE 220				
RV705	1-230-519-11	RES, ADJ, METAL 470				
RV706	1-230-522-11	RES, ADJ, METAL 4.7K				
RV707	1-230-519-11	RES, ADJ, METAL 470				
RV708	1-230-519-11	RES, ADJ, METAL 470				
RV901	1-230-523-11	RES, ADJ, METAL 10K				
		〈 THERMISTOR 〉				
TH701	1-800-200-00	THERMISTOR S-3K				
**********						
*	1-633-696-11	JB-4 BOARD				
		**********				
		〈 CAPACITOR 〉				
C501	1-163-009-11	CERAMIC CHIP	0.001uF	10%	50V	
C502	1-163-009-11	CERAMIC CHIP	0.001uF	10%	50V	
C503	1-163-009-11	CERAMIC CHIP	0.001uF	10%	50V	

Ref. No.	Part No.	Description			Remark
C504	1-163-009-11	CERAMIC CHIP	0.001uF	10%	50V
**********					
*	1-633-697-11	JB-5 BOARD			
		**********			
		(CAPACITOR)			
C301	1-163-035-00	CERAMIC CHIP	0.047uF		50V
C302	1-124-584-00	ELECT	100uF	20%	10V
C303	1-163-009-11	CERAMIC CHIP	0.001uF	10%	50V
		(CONNECTOR)			
CN301	1-506-470-11	CONNECTOR 5P, MALE			
		(DIODE)			
D301	8-719-800-76	DIODE 1SS226			
		(JACK)			
J301	1-537-005-21	JACK BOARD (VIDEO/AUDIO/RFU DC OUT)			
		(TRANSISTOR)			
Q301	8-729-216-22	TRANSISTOR 2SA1162			
		(RESISTOR)			
R301	1-216-001-00	METAL CHIP	10	5%	1/10W
R302	1-216-065-00	METAL CHIP	4.7K	5%	1/10W
**********					
*	A-7070-024-A	LD-1 BOARD, COMPLETE			
		**********			
*	1-613-367-11	LD-1 BOARD			
		(DIODE)			
D901	8-719-928-54	DIODE GL-450S			
**********					

Ref. No.	Part No.	Description			Remark
		LS-9 BOARD, COMPLETE			
		**********			
	1-506-485-11	CONNECTOR 6P, MALE			
**********					
*	A-7062-565-A	MB-19 BOARD, COMPLETE			
		**********			
*	4-911-047-01	VIBRATION CONTROL (D)			
		(CAPACITOR)			
C601	1-163-035-00	CERAMIC CHIP	0.047uF		50V
C602	1-163-035-00	CERAMIC CHIP	0.047uF		50V
C603	1-163-093-00	CERAMIC CHIP	10PF	5%	50V
C604	1-163-093-00	CERAMIC CHIP	10PF	5%	50V
C605	1-163-035-00	CERAMIC CHIP	0.047uF		50V
C606	1-163-035-00	CERAMIC CHIP	0.047uF		50V
C607	1-163-035-00	CERAMIC CHIP	0.047uF		50V
C608	1-163-035-00	CERAMIC CHIP	0.047uF		50V
C609	1-124-234-00	ELECT	22uF	20%	16V
C610	1-163-035-00	CERAMIC CHIP	0.047uF		50V
C641	1-163-035-00	CERAMIC CHIP	0.047uF		50V
C651	1-163-141-00	CERAMIC CHIP	0.001uF	5%	50V
C652	1-124-234-00	ELECT	22uF	20%	16V
C653	1-163-035-00	CERAMIC CHIP	0.047uF		50V
C661	1-163-141-00	CERAMIC CHIP	0.001uF	5%	50V
C662	1-124-234-00	ELECT	22uF	20%	16V
C663	1-163-035-00	CERAMIC CHIP	0.047uF		50V
C671	1-124-584-00	ELECT	100uF	20%	10V
C672	1-135-091-00	TANTALUM CHIP	1uF	20%	16V
C673	1-124-584-00	ELECT	100uF	20%	10V
C674	1-164-232-11	CERAMIC CHIP	0.01uF		50V
C675	1-163-019-00	CERAMIC CHIP	0.0068uF	10%	50V
C676	1-124-584-00	ELECT	100uF	20%	10V
C677	1-163-038-00	CERAMIC CHIP	0.1uF		25V
C678	1-124-584-00	ELECT	100uF	20%	10V
C679	1-164-232-11	CERAMIC CHIP	0.01uF		50V
C680	1-135-155-21	TANTALUM CHIP	4.7uF	10%	10V
C681	1-124-584-00	ELECT	100uF	20%	10V
C682	1-135-157-21	TANTALUM CHIP	10uF	20%	6.3V
C683	1-164-232-11	CERAMIC CHIP	0.01uF		50V

MB-19

Ref. No.	Part No.	Description	Remark
		〈 CONNECTOR 〉	
CN601	1-566-943-11	CONNECTOR, BOARD TO BOARD 18P	
CN602	1-566-944-11	CONNECTOR, BOARD TO BOARD 22P	
CN603	1-506-467-11	CONNECTOR 2P, MALE	
CN605	1-506-473-11	CONNECTOR 8P, MALE	
CN606	1-506-470-11	CONNECTOR 5P, MALE	
CN923	1-506-474-11	CONNECTOR 9P, MALE	
CN924	1-506-473-11	CONNECTOR 8P, MALE	
		〈 DIODE 〉	
D601	8-719-104-34	DIODE 1S2836	
D602	8-719-104-34	DIODE 1S2836	
D603	8-719-104-34	DIODE 1S2836	
D604	8-719-400-18	DIODE MA152WK	
D641	8-719-800-76	DIODE 1SS226	
D642	8-719-800-76	DIODE 1SS226	
		〈 IC 〉	
IC601	8-759-149-34	IC uPD75106G-591-1B	
IC603	8-759-300-71	IC TC4053BFHB	
IC651	8-759-603-27	IC M5201FP	
IC661	8-759-603-27	IC M5201FP	
IC671	8-741-150-50	IC SBX1505	
		〈 COIL 〉	
L601	1-408-970-21	INDUCTOR 10uH	
L602	1-408-970-21	INDUCTOR 10uH	
L603	1-408-970-21	INDUCTOR 10uH	
L604	1-408-948-00	INDUCTOR 220uH	
L605	1-408-948-00	INDUCTOR 220uH	
L641	1-410-393-11	INDUCTOR CHIP 100uH	
L671	1-408-948-00	INDUCTOR 220uH	
		〈 TRANSISTOR 〉	
Q601	8-729-901-06	TRANSISTOR DTA144EK	
Q602	8-729-901-01	TRANSISTOR DTC144EK	
Q603	8-729-901-01	TRANSISTOR DTC144EK	
Q604	8-729-901-01	TRANSISTOR DTC144EK	
Q605	8-729-901-06	TRANSISTOR DTA144EK	
Q606	8-729-901-06	TRANSISTOR DTA144EK	
Q607	8-729-901-01	TRANSISTOR DTC144EK	
Q608	8-729-901-01	TRANSISTOR DTC144EK	
Q609	8-729-901-06	TRANSISTOR DTA144EK	
Q671	8-729-100-66	TRANSISTOR 2SC1623	
		〈 RESISTOR 〉	
R601	1-216-089-00	METAL CHIP 47K 5% 1/10W	
R602	1-216-089-00	METAL CHIP 47K 5% 1/10W	
R603	1-216-097-00	METAL CHIP 100K 5% 1/10W	
R604	1-216-073-00	METAL CHIP 10K 5% 1/10W	
R611	1-216-081-00	METAL CHIP 22K 5% 1/10W	
R612	1-216-081-00	METAL CHIP 22K 5% 1/10W	
R613	1-216-081-00	METAL CHIP 22K 5% 1/10W	
R614	1-216-081-00	METAL CHIP 22K 5% 1/10W	
R615	1-216-081-00	METAL CHIP 22K 5% 1/10W	
R616	1-216-081-00	METAL CHIP 22K 5% 1/10W	
R617	1-216-081-00	METAL CHIP 22K 5% 1/10W	
R618	1-216-079-00	METAL CHIP 18K 5% 1/10W	
R619	1-216-081-00	METAL CHIP 22K 5% 1/10W	
R625	1-216-041-00	METAL CHIP 470 5% 1/10W	
R626	1-216-089-00	METAL CHIP 47K 5% 1/10W	
R627	1-216-089-00	METAL CHIP 47K 5% 1/10W	
R628	1-216-089-00	METAL CHIP 47K 5% 1/10W	
R629	1-216-073-00	METAL CHIP 10K 5% 1/10W	
R630	1-216-089-00	METAL CHIP 47K 5% 1/10W	
R631	1-216-089-00	METAL CHIP 47K 5% 1/10W	
R632	1-216-041-00	METAL CHIP 470 5% 1/10W	
R633	1-216-089-00	METAL CHIP 47K 5% 1/10W	
R634	1-216-097-00	METAL CHIP 100K 5% 1/10W	
R635	1-216-049-00	METAL CHIP 1K 5% 1/10W	
R636	1-216-049-00	METAL CHIP 1K 5% 1/10W	
R637	1-216-073-00	METAL CHIP 10K 5% 1/10W	
R638	1-216-073-00	METAL CHIP 10K 5% 1/10W	
R639	1-216-073-00	METAL CHIP 10K 5% 1/10W	
R641	1-216-072-00	METAL CHIP 9.1K 5% 1/10W	
R642	1-216-081-00	METAL CHIP 22K 5% 1/10W	
R643	1-216-089-00	METAL CHIP 47K 5% 1/10W	
R644	1-216-099-00	METAL CHIP 120K 5% 1/10W	
R645	1-216-072-00	METAL CHIP 9.1K 5% 1/10W	
R646	1-216-081-00	METAL CHIP 22K 5% 1/10W	
R647	1-216-089-00	METAL CHIP 47K 5% 1/10W	
R648	1-216-099-00	METAL CHIP 120K 5% 1/10W	
R649	1-216-061-00	METAL CHIP 3.3K 5% 1/10W	

Ref. No.	Part No.	Description				Remark
R651	1-216-093-00	METAL CHIP	68K	5%	1/10W	
R652	1-216-065-00	METAL CHIP	4.7K	5%	1/10W	
R653	1-216-093-00	METAL CHIP	68K	5%	1/10W	
R654	1-216-047-00	METAL CHIP	820	5%	1/10W	
R655	1-216-051-00	METAL CHIP	1.2K	5%	1/10W	
R656	1-216-057-00	METAL CHIP	2.2K	5%	1/10W	
R657	1-216-089-00	METAL CHIP	47K	5%	1/10W	
R661	1-216-093-00	METAL CHIP	68K	5%	1/10W	
R662	1-216-065-00	METAL CHIP	4.7K	5%	1/10W	
R663	1-216-093-00	METAL CHIP	68K	5%	1/10W	
R664	1-216-047-00	METAL CHIP	820	5%	1/10W	
R665	1-216-051-00	METAL CHIP	1.2K	5%	1/10W	
R666	1-216-057-00	METAL CHIP	2.2K	5%	1/10W	
R667	1-216-089-00	METAL CHIP	47K	5%	1/10W	
R671	1-216-295-00	METAL CHIP	0	5%	1/10W	
R672	1-216-077-00	METAL CHIP	15K	5%	1/10W	
R673	1-216-052-00	METAL CHIP	1.3K	5%	1/10W	
R674	1-216-077-00	METAL CHIP	15K	5%	1/10W	
R675	1-216-057-00	METAL CHIP	2.2K	5%	1/10W	
R676	1-216-045-00	METAL CHIP	680	5%	1/10W	
R677	1-216-075-00	METAL CHIP	12K	5%	1/10W	
R678	1-216-065-00	METAL CHIP	4.7K	5%	1/10W	
R679	1-216-053-00	METAL CHIP	1.5K	5%	1/10W	
R680	1-216-049-00	METAL CHIP	1K	5%	1/10W	
R681	1-216-089-00	METAL CHIP	47K	5%	1/10W	
R682	1-216-097-00	METAL CHIP	100K	5%	1/10W	
R683	1-216-089-00	METAL CHIP	47K	5%	1/10W	
		⟨ VARIABLE RESISTOR ⟩				
RV031	1-230-521-11	RES, ADJ, METAL 2.2K				
RV032	1-230-529-11	RES, ADJ, METAL 470K				
RV051	1-230-524-11	RES, ADJ, METAL 22K				
RV052	1-230-521-11	RES, ADJ, METAL 2.2K				
		⟨ SWITCH ⟩				
S641	1-554-371-51	SWITCH, TACT (EJECT)				
S642	1-554-371-51	SWITCH, TACT (PB)				
S643	1-554-371-51	SWITCH, TACT (PAUSE)				
S644	1-554-371-51	SWITCH, TACT (REW)				
S645	1-554-371-51	SWITCH, TACT (STOP)				
S646	1-554-371-51	SWITCH, TACT (REC)				
S647	1-554-371-51	SWITCH, TACT (FF)				
S648	1-570-909-21	SWITCH, TACTIL (REFLOW TYPE) (POWER)				
S649	1-554-371-51	SWITCH, TACT (X-1)				
		⟨ FILTER ⟩				
T603	1-235-398-11	BPF				
T651	1-235-900-11	FILTER, LOW PASS				
T661	1-235-900-11	FILTER, LOW PASS				
		⟨ CRYSTAL ⟩				
X601	1-567-121-00	VIBRATOR, CRYSTAL (4.19MHz)				
**********						
*	A-7061-819-A	MD-23 BOARD, COMPLETE				
		**********				
	1-625-649-11	FP-84 FLEXIBLE BOARD				
	1-625-650-11	FP-122 FLEXIBLE BOARD				
		⟨ CAPACITOR ⟩				
C801	1-124-465-00	ELECT	0.47uF	20%	50V	
C802	1-124-464-11	ELECT	0.22uF	20%	50V	
C803	1-163-038-00	CERAMIC CHIP	0.1uF		25V	
C804	1-126-160-11	ELECT	1uF	20%	50V	
C805	1-163-038-00	CERAMIC CHIP	0.1uF		25V	
C806	1-126-151-11	ELECT, NONPOLAR	4.7uF	20%	16V	
C808	1-126-162-11	ELECT	3.3uF	20%	50V	
C809	1-124-584-00	ELECT	100uF	20%	10V	
C810	1-126-096-11	ELECT	10uF	20%	35V	
C811	1-126-096-11	ELECT	10uF	20%	35V	
C812	1-126-096-11	ELECT	10uF	20%	35V	
C813	1-126-160-11	ELECT	1uF	20%	50V	
C814	1-126-160-11	ELECT	1uF	20%	50V	
C815	1-126-160-11	ELECT	1uF	20%	50V	
C816	1-124-229-00	ELECT	33uF	20%	10V	
C817	1-124-229-00	ELECT	33uF	20%	10V	
C818	1-124-229-00	ELECT	33uF	20%	10V	
C819	1-163-038-00	CERAMIC CHIP	0.1uF		25V	
C820	1-163-038-00	CERAMIC CHIP	0.1uF		25V	
C821	1-164-232-11	CERAMIC CHIP	0.01uF		50V	
C822	1-164-232-11	CERAMIC CHIP	0.01uF		50V	
C823	1-163-038-00	CERAMIC CHIP	0.1uF		25V	

MD-23

Ref. No.	Part No.	Description			Remark
C824	1-163-038-00	CERAMIC CHIP	0.1uF		25V
C825	1-126-162-11	ELECT	3.3uF	20%	50V
C833	1-163-038-00	CERAMIC CHIP	0.1uF		25V
C834	1-163-017-00	CERAMIC CHIP	0.0047uF	5%	50V
C835	1-126-501-11	ELECT	0.15uF	20%	50V
C836	1-164-157-11	CERAMIC CHIP	0.068uF	10%	25V
C837	1-124-464-11	ELECT	0.22uF	20%	50V
C838	1-124-589-11	ELECT	47uF	20%	16V
C839	1-126-529-11	ELECT	0.47uF	20%	50V
C840	1-164-232-11	CERAMIC CHIP	0.01uF		50V
C841	1-124-589-11	ELECT	47uF	20%	16V
C901	1-124-234-00	ELECT	22uF	20%	16V
C902	1-124-234-00	ELECT	22uF	20%	16V
C903	1-124-234-00	ELECT	22uF	20%	16V
C904	1-124-234-00	ELECT	22uF	20%	16V
C905	1-124-257-00	ELECT	2.2uF	20%	50V
C906	1-164-232-11	CERAMIC CHIP	0.01uF		50V
C907	1-163-038-00	CERAMIC CHIP	0.1uF		25V
C908	1-126-096-11	ELECT	10uF	20%	35V
C909	1-163-077-00	CERAMIC CHIP	0.1uF	10%	25V
C910	1-130-491-00	MYLAR	0.047uF	5%	50V
C911	1-130-491-00	MYLAR	0.047uF	5%	50V
C912	1-130-483-00	MYLAR	0.01uF	5%	50V
C913	1-164-232-11	CERAMIC CHIP	0.01uF		50V
C914	1-124-589-11	ELECT	47uF	20%	16V
C915	1-164-232-11	CERAMIC CHIP	0.01uF		50V
C916	1-126-530-11	ELECT	22uF	20%	10V
C917	1-126-530-11	ELECT	22uF	20%	10V
C918	1-164-232-11	CERAMIC CHIP	0.01uF		50V
C919	1-164-232-11	CERAMIC CHIP	0.01uF		50V
C950	1-164-157-11	CERAMIC CHIP	0.068uF	10%	25V
C991	1-163-035-00	CERAMIC CHIP	0.047uF		50V
C992	1-163-035-00	CERAMIC CHIP	0.047uF		50V
C993	1-164-232-11	CERAMIC CHIP	0.01uF		50V
		⟨ CONNECTOR ⟩			
CN801	1-506-483-21	CONNECTOR 4P, MALE			
CN803	1-506-481-11	CONNECTOR 2P, MALE			
CN804	1-506-484-11	CONNECTOR 5P, MALE			
CN805	1-506-469-11	CONNECTOR 4P, MALE			
CN806	1-506-469-11	CONNECTOR 4P, MALE			

Ref. No.	Part No.	Description	Remark
CN807	1-566-527-11	CONNECTOR, FPC (ZIF) 11P	
CN808	1-566-531-11	CONNECTOR, FPC (ZIF) 15P	
CN809	1-566-945-11	CONNECTOR, BOARD TO BOARD 18P	
CN810	1-566-946-11	CONNECTOR, BOARD TO BOARD 22P	
CN811	* 1-566-367-11	CONNECTOR, HINGE (RECEPTACLE)	
CN812	1-566-942-11	CONNECTOR, HINGE (RECEPTACLE) 30P	
CN814	* 1-566-367-11	CONNECTOR, HINGE (RECEPTACLE)	
		⟨ DIODE ⟩	
D803	8-719-200-27	DIODE E10DS2	
D810	8-719-400-18	DIODE MA152WK	
D811	8-719-200-27	DIODE E10DS2	
D901	8-719-400-18	DIODE MA152WK	
D902	8-719-400-18	DIODE MA152WK	
D903	8-719-400-18	DIODE MA152WK	
D904	8-719-800-76	DIODE 1SS226	
D905	8-719-400-18	DIODE MA152WK	
		⟨ IC ⟩	
IC801	8-752-037-08	IC CXA1109M	
IC802	8-759-802-79	IC LB1616M	
IC804	8-759-514-98	IC RC3414M	
IC805	8-759-100-93	IC uPC393G2	
IC806	8-759-207-00	IC TA7733F	
IC807	8-759-107-68	IC CX20115A	
IC808	8-759-700-62	IC NJM4562M	
IC809	8-759-100-94	IC uPC358G2	
IC901	8-759-207-50	IC TA7745F	
IC902	8-759-150-05	IC uPC324G2	
IC903	8-759-925-66	IC BA6303F	
IC904	8-759-008-67	IC TC4066BF	
		⟨ COIL ⟩	
L991	1-408-777-00	INDUCTOR CHIP 10uH	
		⟨ LINK IC ⟩	
PS801	⚠ 1-532-685-00	LINK, IC (0.8A/125V)	
		⟨ TRANSISTOR ⟩	
Q806	8-729-111-14	TRANSISTOR 2SA1385-Z	
Q807	8-729-901-06	TRANSISTOR DTA144EK	

The components identified by mark ⚠ or dotted line with mark ⚠ are critical for safety.
Replace only with part number specified.

Les composants identifiés par une marque ⚠ sont critiques pour la sécurité.
Ne les remplacer que par une piéce portant le numéro spécifié.

Ref. No.	Part No.	Description	Remark
Q809	8-729-111-95	TRANSISTOR 2SC3518	
Q810	8-729-805-25	TRANSISTOR 2SB1121	
Q811	8-729-805-25	TRANSISTOR 2SB1121	
Q812	8-729-111-14	TRANSISTOR 2SA1385-Z	
Q813	8-729-100-66	TRANSISTOR 2SC1623	
Q820	8-729-111-95	TRANSISTOR 2SC3518	
Q821	8-729-100-66	TRANSISTOR 2SC1623	
Q880	8-729-100-66	TRANSISTOR 2SC1623	
Q901	8-729-920-82	TRANSISTOR 2SB1188-QR	
Q902	8-729-920-82	TRANSISTOR 2SB1188-QR	
Q903	8-729-920-82	TRANSISTOR 2SB1188-QR	
Q904	8-729-901-06	TRANSISTOR DTA144EK	
Q905	8-729-901-06	TRANSISTOR DTA144EK	
Q906	8-729-901-01	TRANSISTOR DTC144EK	
Q907	8-729-901-01	TRANSISTOR DTC144EK	
Q908	8-729-901-01	TRANSISTOR DTC144EK	
Q909	8-729-901-06	TRANSISTOR DTA144EK	
Q950	8-729-903-97	TRANSISTOR FMS1FE	
Q990	8-729-100-66	TRANSISTOR 2SC1623	

〈 RESISTOR 〉

R801	1-216-105-00	METAL CHIP	220K	5%	1/10W
R802	1-216-105-00	METAL CHIP	220K	5%	1/10W
R803	1-216-097-00	METAL CHIP	100K	5%	1/10W
R804	1-216-097-00	METAL CHIP	100K	5%	1/10W
R805	1-216-085-00	METAL CHIP	33K	5%	1/10W
R806	1-216-065-00	METAL CHIP	4.7K	5%	1/10W
R807	1-216-049-00	METAL CHIP	1K	5%	1/10W
R810	1-216-051-00	METAL CHIP	1.2K	5%	1/10W
R811	1-216-051-00	METAL CHIP	1.2K	5%	1/10W
R818	1-216-059-00	METAL CHIP	2.7K	5%	1/10W
R819	1-216-113-00	METAL CHIP	470K	5%	1/10W
R820	1-216-025-00	METAL CHIP	100	5%	1/10W
R823	1-216-025-00	METAL CHIP	100	5%	1/10W
R824	1-216-081-00	METAL CHIP	22K	5%	1/10W
R826	1-216-073-00	METAL CHIP	10K	5%	1/10W
R830	1-216-101-00	METAL CHIP	150K	5%	1/10W
R831	1-216-049-00	METAL CHIP	1K	5%	1/10W
R832	1-216-304-11	METAL CHIP	3.3	5%	1/10W
R833	1-216-304-11	METAL CHIP	3.3	5%	1/10W
R834	1-216-304-11	METAL CHIP	3.3	5%	1/10W
R835	1-216-049-00	METAL CHIP	1K	5%	1/10W
R840	1-216-107-00	METAL CHIP	270K	5%	1/10W
R841	1-216-073-00	METAL CHIP	10K	5%	1/10W
R842	1-216-073-00	METAL CHIP	10K	5%	1/10W
R843	1-216-073-00	METAL CHIP	10K	5%	1/10W
R844	1-216-107-00	METAL CHIP	270K	5%	1/10W
R845	1-216-073-00	METAL CHIP	10K	5%	1/10W
R846	1-216-107-00	METAL CHIP	270K	5%	1/10W
R847	1-216-073-00	METAL CHIP	10K	5%	1/10W
R848	1-216-107-00	METAL CHIP	270K	5%	1/10W
R849	1-216-073-00	METAL CHIP	10K	5%	1/10W
R852	1-216-081-00	METAL CHIP	22K	5%	1/10W
R860	1-216-065-00	METAL CHIP	4.7K	5%	1/10W
R861	1-216-055-00	METAL CHIP	1.8K	5%	1/10W
R864	1-216-033-00	METAL CHIP	220	5%	1/10W
R870	1-216-113-00	METAL CHIP	470K	5%	1/10W
R885	1-216-073-00	METAL CHIP	10K	5%	1/10W
R886	1-216-073-00	METAL CHIP	10K	5%	1/10W
R887	1-216-049-00	METAL CHIP	1K	5%	1/10W
R888	1-216-049-00	METAL CHIP	1K	5%	1/10W
R890	1-216-681-11	METAL CHIP	18K	0.5%	1/10W
R891	1-216-681-11	METAL CHIP	18K	0.5%	1/10W
R892	1-216-077-00	METAL CHIP	15K	5%	1/10W
R893	1-216-077-00	METAL CHIP	15K	5%	1/10W
R894	1-216-113-00	METAL CHIP	470K	5%	1/10W
R895	1-216-113-00	METAL CHIP	470K	5%	1/10W
R896	1-216-025-00	METAL CHIP	100	5%	1/10W
R897	1-216-049-00	METAL CHIP	1K	5%	1/10W
R898	1-216-025-00	METAL CHIP	100	5%	1/10W
R899	1-216-073-00	METAL CHIP	10K	5%	1/10W
R900	1-216-097-00	METAL CHIP	100K	5%	1/10W
R901	1-216-035-00	METAL CHIP	270	5%	1/10W
R902	1-216-035-00	METAL CHIP	270	5%	1/10W
R903	1-216-035-00	METAL CHIP	270	5%	1/10W
R904	1-216-049-00	METAL CHIP	1K	5%	1/10W
R905	1-216-057-00	METAL CHIP	2.2K	5%	1/10W
R906	1-216-057-00	METAL CHIP	2.2K	5%	1/10W
R907	1-216-069-00	METAL CHIP	6.8K	5%	1/10W
R908	1-216-027-00	METAL CHIP	120	5%	1/10W
R909	1-216-027-00	METAL CHIP	120	5%	1/10W
R910	1-216-073-00	METAL CHIP	10K	5%	1/10W
R911	1-216-113-00	METAL CHIP	470K	5%	1/10W

Ref. No.	Part No.	Description				Remark
R912	1-216-069-00	METAL CHIP	6.8K	5%	1/10W	
R913	1-216-059-00	METAL CHIP	2.7K	5%	1/10W	
R916	1-216-073-00	METAL CHIP	10K	5%	1/10W	
R917	1-216-073-00	METAL CHIP	10K	5%	1/10W	
R918	1-216-073-00	METAL CHIP	10K	5%	1/10W	
R919	1-216-073-00	METAL CHIP	10K	5%	1/10W	
R920	1-216-077-00	METAL CHIP	15K	5%	1/10W	
R921	1-216-083-00	METAL CHIP	27K	5%	1/10W	
R922	1-216-085-00	METAL CHIP	33K	5%	1/10W	
R923	1-216-748-11	METAL CHIP	39K	5%	1/10W	
R924	1-216-089-00	METAL CHIP	47K	5%	1/10W	
R925	1-216-089-00	METAL CHIP	47K	5%	1/10W	
R926	1-216-109-00	METAL CHIP	330K	5%	1/10W	
R927	1-216-117-00	METAL CHIP	680K	5%	1/10W	
R928	1-216-073-00	METAL CHIP	10K	5%	1/10W	
R929	1-216-053-00	METAL CHIP	1.5K	5%	1/10W	
R951	1-216-069-00	METAL CHIP	6.8K	5%	1/10W	
R952	1-216-063-00	METAL CHIP	3.9K	5%	1/10W	
R953	1-214-972-00	METAL	0.22	1%	1/4W	
R955	1-216-079-00	METAL CHIP	18K	5%	1/10W	
R991	1-216-073-00	METAL CHIP	10K	5%	1/10W	
R992	1-216-073-00	METAL CHIP	10K	5%	1/10W	
R993	1-216-049-00	METAL CHIP	1K	5%	1/10W	
R994	1-216-295-00	METAL CHIP	0	5%	1/10W	
R996	1-216-049-00	METAL CHIP	1K	5%	1/10W	
R997	1-216-049-00	METAL CHIP	1K	5%	1/10W	
R998	1-216-049-00	METAL CHIP	1K	5%	1/10W	
		〈 VARIABLE RESISTOR 〉				
RV801	1-230-520-11	RES, ADJ, METAL 1K				
RV802	1-230-523-11	RES, ADJ, METAL 10K				
RV803	1-230-527-11	RES, ADJ, METAL 100K				
RV901	1-230-529-11	RES, ADJ, METAL 470K				
		〈 THERMISTOR 〉				
THP801	1-202-854-00	THERMISTOR (POSITIVE)				
		〈 CONNECTOR 〉				
W801	1-562-880-11	CONNECTOR, CARD EDGE 15P				
W901	1-562-880-11	CONNECTOR, CARD EDGE 15P				

Ref. No.	Part No.	Description			Remark
**********					
*	1-633-698-11	MJ-25 BOARD			
		**********			
		〈 CAPACITOR 〉			
C601	1-163-038-00	CERAMIC CHIP	0.1uF	25V	
		〈 CONNECTOR 〉			
CN601	1-506-468-11	CONNECTOR 3P, MALE			
		〈 DIODE 〉			
D601	8-719-106-80	DIODE RD13M-B1			
		〈 JACK 〉			
J601	1-507-995-21	JACK, MICROPHONE (MIC/⌀)			
**********					
	A-7040-159-A	MS-4 BOARD, COMPLETE			
		**********			
	1-163-038-00	CERAMIC CHIP	0.1uF	25V	
	1-506-485-11	CONNECTOR 6P, MALE			
**********					
*	A-7061-826-A	PA-27 BOARD, COMPLETE			
		**********			
		〈 CAPACITOR 〉			
C001	1-163-012-00	CERAMIC CHIP	0.0018uF	10% 50V	
C002	1-124-584-00	ELECT	100uF	20% 10V	
C003	1-126-154-11	ELECT	47uF	20% 6.3V	
C004	1-126-154-11	ELECT	47uF	20% 6.3V	
C005	1-130-490-11	MYLAR	0.039uF	5% 50V	
C006	1-163-125-00	CERAMIC CHIP	220PF	5% 50V	
C007	1-130-479-00	MYLAR	0.0047uF	5% 50V	
C008	1-126-154-11	ELECT	47uF	20% 6.3V	
C009	1-163-097-00	CERAMIC CHIP	15PF	5% 50V	
C010	1-126-154-11	ELECT	47uF	20% 6.3V	

Ref. No.	Part No.	Description				Remark
C011	1-130-469-00	MYLAR	680PF	5%	50V	
C012	1-130-482-00	MYLAR	0.0082uF	5%	50V	
C013	1-135-149-21	TANTALUM CHIP	2.2uF	20%	10V	
C014	1-135-156-21	TANTALUM CHIP	6.8uF	10%	6.3V	
C015	1-135-072-21	TANTALUM CHIP	0.22uF	10%	35V	
C016	1-126-153-11	ELECT	22uF	20%	6.3V	
C017	1-163-251-11	CERAMIC CHIP	100PF	5%	50V	
C018	1-126-153-11	ELECT	22uF	20%	6.3V	
C019	1-126-153-11	ELECT	22uF	20%	6.3V	
C031	1-124-584-00	ELECT	100uF	20%	10V	
C032	1-124-584-00	ELECT	100uF	20%	10V	
C033	1-163-035-00	CERAMIC CHIP	0.047uF		50V	
C034	1-126-154-11	ELECT	47uF	20%	6.3V	
C035	1-126-154-11	ELECT	47uF	20%	6.3V	
C036	1-163-035-00	CERAMIC CHIP	0.047uF		50V	
C037	1-126-154-11	ELECT	47uF	20%	6.3V	
C038	1-135-156-21	TANTALUM CHIP	6.8uF	10%	6.3V	
C039	1-164-232-11	CERAMIC CHIP	0.01uF		50V	
C040	1-164-232-11	CERAMIC CHIP	0.01uF		50V	
C041	1-109-814-11	CAP, CHIP MICA	220PF			
C042	1-126-154-11	ELECT	47uF	20%	6.3V	
C043	1-126-153-11	ELECT	22uF	20%	6.3V	
C044	1-126-154-11	ELECT	47uF	20%	6.3V	
C051	1-163-012-00	CERAMIC CHIP	0.0018uF	10%	50V	
C052	1-124-584-00	ELECT	100uF	20%	10V	
C053	1-126-154-11	ELECT	47uF	20%	6.3V	
C054	1-126-154-11	ELECT	47uF	20%	6.3V	
C055	1-130-490-11	MYLAR	0.039uF	5%	50V	
C056	1-163-125-00	CERAMIC CHIP	220PF	5%	50V	
C057	1-130-479-00	MYLAR	0.0047uF	5%	50V	
C058	1-126-154-11	ELECT	47uF	20%	6.3V	
C059	1-163-097-00	CERAMIC CHIP	15PF	5%	50V	
C060	1-126-154-11	ELECT	47uF	20%	6.3V	
C061	1-130-469-00	MYLAR	680PF	5%	50V	
C062	1-130-482-00	MYLAR	0.0082uF	5%	50V	
C063	1-135-149-21	TANTALUM CHIP	2.2uF	20%	10V	
C064	1-135-156-21	TANTALUM CHIP	6.8uF	10%	6.3V	
C065	1-135-072-21	TANTALUM CHIP	0.22uF	10%	35V	
C066	1-126-153-11	ELECT	22uF	20%	6.3V	
C067	1-163-251-11	CERAMIC CHIP	100PF	5%	50V	
C068	1-126-153-11	ELECT	22uF	20%	6.3V	
C069	1-126-153-11	ELECT	22uF	20%	6.3V	

Ref. No.	Part No.	Description				Remark
		(CONNECTOR)				
CN001	1-563-314-11	CONNECTOR, BOARD TO BOARD 20P				
		(DIODE)				
D031	8-719-104-34	DIODE 1S2836				
D032	8-719-104-34	DIODE 1S2836				
D033	8-719-104-34	DIODE 1S2836				
		(IC)				
IC001	8-752-009-90	IC CX20099				
IC002	8-759-981-92	IC NJM4558M				
IC003	8-759-981-92	IC NJM4558M				
IC004	8-752-322-57	IC CXD1077M				
IC005	8-759-908-15	IC TL431CLP				
		(COIL)				
L001	1-408-793-21	INDUCTOR CHIP 220uH				
		(TRANSISTOR)				
Q001	8-729-202-38	TRANSISTOR 2SC3326N				
Q002	8-729-202-38	TRANSISTOR 2SC3326N				
Q031	8-729-901-06	TRANSISTOR DTA144EK				
Q032	8-729-901-06	TRANSISTOR DTA144EK				
Q033	8-729-901-06	TRANSISTOR DTA144EK				
Q034	8-729-216-22	TRANSISTOR 2SA1162				
Q035	8-729-216-22	TRANSISTOR 2SA1162				
Q051	8-729-202-38	TRANSISTOR 2SC3326N				
Q052	8-729-202-38	TRANSISTOR 2SC3326N				
		(RESISTOR)				
R001	1-216-043-00	METAL CHIP	560	5%	1/10W	
R002	1-216-078-00	METAL GLAZE	16K	5%	1/10W	
R003	1-216-072-00	METAL CHIP	9.1K	5%	1/10W	
R004	1-216-089-00	METAL CHIP	47K	5%	1/10W	
R005	1-216-073-00	METAL CHIP	10K	5%	1/10W	
R006	1-216-065-00	METAL CHIP	4.7K	5%	1/10W	
R007	1-216-073-00	METAL CHIP	10K	5%	1/10W	
R008	1-216-059-00	METAL CHIP	2.7K	5%	1/10W	
R009	1-216-045-00	METAL CHIP	680	5%	1/10W	
R010	1-216-057-00	METAL CHIP	2.2K	5%	1/10W	
R012	1-216-677-11	METAL CHIP	12K	0.5%	1/10W	

PA-27 PD-19

Ref. No.	Part No.	Description				Remark
R013	1-216-061-00	METAL CHIP	3.3K	5%	1/10W	
R014	1-216-061-00	METAL CHIP	3.3K	5%	1/10W	
R015	1-216-059-00	METAL CHIP	2.7K	5%	1/10W	
R016	1-216-060-00	METAL GLAZE	3K	5%	1/10W	
R017	1-216-058-00	METAL GLAZE	2.4K	5%	1/10W	
R018	1-216-748-11	METAL CHIP	39K	5%	1/10W	
R019	1-216-077-00	METAL CHIP	15K	5%	1/10W	
R020	1-216-065-00	METAL CHIP	4.7K	5%	1/10W	
R021	1-216-057-00	METAL CHIP	2.2K	5%	1/10W	
R022	1-216-057-00	METAL CHIP	2.2K	5%	1/10W	
R023	1-216-059-00	METAL CHIP	2.7K	5%	1/10W	
R024	1-216-063-00	METAL CHIP	3.9K	5%	1/10W	
R031	1-216-117-00	METAL CHIP	680K	5%	1/10W	
R032	1-216-700-11	METAL CHIP	470K	1%	1/10W	
R033	1-216-022-00	METAL CHIP	75	5%	1/10W	
R034	1-216-039-00	METAL CHIP	390	5%	1/10W	
R035	1-216-049-00	METAL CHIP	1K	5%	1/10W	
R036	1-216-653-11	METAL CHIP	1.2K	0.5%	1/10W	
R037	1-216-661-11	METAL CHIP	2.7K	0.5%	1/10W	
R039	1-215-401-11	METAL	150	1%	1/6W	
R040	1-216-061-00	METAL CHIP	3.3K	5%	1/10W	
R041	1-216-295-00	METAL CHIP	0	5%	1/10W	
R042	1-216-073-00	METAL CHIP	10K	5%	1/10W	
R043	1-216-097-00	METAL CHIP	100K	5%	1/10W	
R051	1-216-043-00	METAL CHIP	560	5%	1/10W	
R052	1-216-078-00	METAL GLAZE	16K	5%	1/10W	
R053	1-216-072-00	METAL CHIP	9.1K	5%	1/10W	
R054	1-216-089-00	METAL CHIP	47K	5%	1/10W	
R055	1-216-073-00	METAL CHIP	10K	5%	1/10W	
R056	1-216-065-00	METAL CHIP	4.7K	5%	1/10W	
R057	1-216-073-00	METAL CHIP	10K	5%	1/10W	
R058	1-216-059-00	METAL CHIP	2.7K	5%	1/10W	
R059	1-216-045-00	METAL CHIP	680	5%	1/10W	
R060	1-216-057-00	METAL CHIP	2.2K	5%	1/10W	
R062	1-216-677-11	METAL CHIP	12K	0.5%	1/10W	
R063	1-216-061-00	METAL CHIP	3.3K	5%	1/10W	
R064	1-216-061-00	METAL CHIP	3.3K	5%	1/10W	
R065	1-216-059-00	METAL CHIP	2.7K	5%	1/10W	
R066	1-216-060-00	METAL GLAZE	3K	5%	1/10W	
R067	1-216-058-00	METAL GLAZE	2.4K	5%	1/10W	
R068	1-216-748-11	METAL CHIP	39K	5%	1/10W	
R069	1-216-077-00	METAL CHIP	15K	5%	1/10W	
R070	1-216-065-00	METAL CHIP	4.7K	5%	1/10W	
R071	1-216-057-00	METAL CHIP	2.2K	5%	1/10W	
R072	1-216-057-00	METAL CHIP	2.2K	5%	1/10W	
R073	1-216-059-00	METAL CHIP	2.7K	5%	1/10W	
R074	1-216-063-00	METAL CHIP	3.9K	5%	1/10W	

〈 VARIABLE RESISTOR 〉

RV001	1-230-524-11	RES, ADJ, METAL	22K			
RV002	1-230-521-11	RES, ADJ, METAL	2.2K			

****

* A-7061-825-A PD-19 BOARD, COMPLETE

****

〈 CAPACITOR 〉

C851	1-163-035-00	CERAMIC CHIP	0.047uF		50V	
C852	1-163-035-00	CERAMIC CHIP	0.047uF		50V	
C853	1-164-232-11	CERAMIC CHIP	0.01uF		50V	
C854	1-163-235-11	CERAMIC CHIP	22PF	5%	50V	
C856	1-135-156-21	TANTALUM CHIP	6.8uF	10%	6.3V	
C857	1-163-035-00	CERAMIC CHIP	0.047uF		50V	
C858	1-135-145-11	TANTALUM CHIP	0.47uF	10%	25V	
C859	1-135-180-21	TANTALUM CHIP	3.3uF	20%	6.3V	
C860	1-135-156-21	TANTALUM CHIP	6.8uF	10%	6.3V	
C861	1-163-235-11	CERAMIC CHIP	22PF	5%	50V	
C862	1-163-085-00	CERAMIC CHIP	2PF		50V	
C863	1-163-035-00	CERAMIC CHIP	0.047uF		50V	
C864	1-163-035-00	CERAMIC CHIP	0.047uF		50V	
C867	1-164-232-11	CERAMIC CHIP	0.01uF		50V	
C868	1-163-099-00	CERAMIC CHIP	18PF	5%	50V	
C869	1-163-235-11	CERAMIC CHIP	22PF	5%	50V	
C870	1-163-109-00	CERAMIC CHIP	47PF	5%	50V	
C871	1-163-035-00	CERAMIC CHIP	0.047uF		50V	
C872	1-135-156-21	TANTALUM CHIP	6.8uF	10%	6.3V	
C873	1-135-156-21	TANTALUM CHIP	6.8uF	10%	6.3V	
C874	1-163-035-00	CERAMIC CHIP	0.047uF		50V	
C875	1-164-232-11	CERAMIC CHIP	0.01uF		50V	
C876	1-163-005-11	CERAMIC CHIP	470PF	10%	50V	
C877	1-163-035-00	CERAMIC CHIP	0.047uF		50V	
C878	1-135-156-21	TANTALUM CHIP	6.8uF	10%	6.3V	

Ref. No.	Part No.	Description		Remark
C879	1-163-035-00	CERAMIC CHIP 0.047uF		50V
C880	1-135-156-21	TANTALUM CHIP 6.8uF	10%	6.3V
C881	1-163-035-00	CERAMIC CHIP 0.047uF		50V
C882	1-163-035-00	CERAMIC CHIP 0.047uF		50V
C884	1-163-035-00	CERAMIC CHIP 0.047uF		50V
C885	1-163-105-00	CERAMIC CHIP 33PF	5%	50V
C886	1-163-105-00	CERAMIC CHIP 33PF	5%	50V
C887	1-163-035-00	CERAMIC CHIP 0.047uF		50V
C888	1-163-035-00	CERAMIC CHIP 0.047uF		50V
C889	1-135-156-21	TANTALUM CHIP 6.8uF	10%	6.3V
		⟨ CONNECTOR ⟩		
CN851	* 1-565-107-21	PIN, CONNECTOR (PC BOARD) 35P		
CN852	* 1-565-107-21	PIN, CONNECTOR (PC BOARD) 35P		
CN853	1-506-777-11	CONNECTOR, BOARD TO BOARD 20P		
		⟨ DIODE ⟩		
D851	8-719-104-34	DIODE 1S2836		
D852	8-719-400-18	DIODE MA152WK		
D853	8-719-400-18	DIODE MA152WK		
		⟨ IC ⟩		
IC851	8-752-324-45	IC CXD1066Q-Z		
IC852	8-759-929-17	IC CXD1051M		
IC853	8-752-010-30	IC CX20103		
IC854	8-752-010-20	IC CX20102		
IC855	8-752-331-00	IC CXK5864BM-12L		
IC856	8-759-948-61	IC CX23011-C		
IC857	8-759-911-19	IC CX23012		
IC858	8-759-972-12	IC CF77305FT		
IC859	8-752-809-68	IC CXP5024H-079Q		
IC860	8-759-972-13	IC CF77309FR		
		⟨ COIL ⟩		
L851	1-410-393-11	INDUCTOR CHIP 100uH		
L852	1-410-393-11	INDUCTOR CHIP 100uH		
L853	1-410-393-11	INDUCTOR CHIP 100uH		
L855	1-410-393-11	INDUCTOR CHIP 100uH		
L856	1-410-393-11	INDUCTOR CHIP 100uH		
L857	1-410-393-11	INDUCTOR CHIP 100uH		
L858	1-410-393-11	INDUCTOR CHIP 100uH		
L859	1-410-393-11	INDUCTOR CHIP 100uH		
L860	1-410-393-11	INDUCTOR CHIP 100uH		
L861	1-410-393-11	INDUCTOR CHIP 100uH		
L862	1-410-393-11	INDUCTOR CHIP 100uH		
		⟨ TRANSISTOR ⟩		
Q851	8-729-102-07	TRANSISTOR 2SC2223		
Q852	8-729-122-63	TRANSISTOR 2SA1226		
Q853	8-729-102-06	TRANSISTOR 2SC2223		
Q853	8-729-102-07	TRANSISTOR 2SC2223		
		⟨ RESISTOR ⟩		
R851	1-216-073-00	METAL CHIP 10K	5%	1/10W
R852	1-216-085-00	METAL CHIP 33K	5%	1/10W
R853	1-216-033-00	METAL CHIP 220	5%	1/10W
R854	1-216-061-00	METAL CHIP 3.3K	5%	1/10W
R855	1-216-081-00	METAL CHIP 22K	5%	1/10W
R856	1-216-079-00	METAL CHIP 18K	5%	1/10W
R857	1-216-077-00	METAL CHIP 15K	5%	1/10W
R858	1-216-077-00	METAL CHIP 15K	5%	1/10W
R859	1-216-049-00	METAL CHIP 1K	5%	1/10W
R860	1-216-071-00	METAL CHIP 8.2K	5%	1/10W
R861	1-216-065-00	METAL CHIP 4.7K	5%	1/10W
R862	1-216-025-00	METAL CHIP 100	5%	1/10W
R863	1-216-041-00	METAL CHIP 470	5%	1/10W
R864	1-216-049-00	METAL CHIP 1K	5%	1/10W
R866	1-216-041-00	METAL CHIP 470	5%	1/10W
R867	1-216-295-00	METAL CHIP 0	5%	1/10W
R868	1-216-295-00	METAL CHIP 0	5%	1/10W
R869	1-216-061-00	METAL CHIP 3.3K	5%	1/10W
R870	1-216-049-00	METAL CHIP 1K	5%	1/10W
R871	1-216-049-00	METAL CHIP 1K	5%	1/10W
R872	1-216-049-00	METAL CHIP 1K	5%	1/10W
R873	1-216-041-00	METAL CHIP 470	5%	1/10W
R874	1-216-053-00	METAL CHIP 1.5K	5%	1/10W
R875	1-216-295-00	METAL CHIP 0	5%	1/10W
R876	1-216-045-00	METAL CHIP 680	5%	1/10W
R879	1-216-051-00	METAL CHIP 1.2K	5%	1/10W
R880	1-216-071-00	METAL CHIP 8.2K	5%	1/10W
R881	1-216-051-00	METAL CHIP 1.2K	5%	1/10W
R882	1-216-043-00	METAL CHIP 560	5%	1/10W
R883	1-216-073-00	METAL CHIP 10K	5%	1/10W
R884	1-216-073-00	METAL CHIP 10K	5%	1/10W

PD-19 POWER BLOCK

Ref. No.	Part No.	Description				Remark
R886	1-216-073-00	METAL CHIP	10K	5%	1/10W	
R887	1-216-065-00	METAL CHIP	4.7K	5%	1/10W	
R888	1-216-065-00	METAL CHIP	4.7K	5%	1/10W	
R889	1-216-073-00	METAL CHIP	10K	5%	1/10W	
R890	1-216-085-00	METAL CHIP	33K	5%	1/10W	
R891	1-216-295-00	METAL CHIP	0	5%	1/10W	
		⟨ VARIABLE RESISTOR ⟩				
RV851	1-230-869-11	RES, ADJ, METAL 4.7K				
RV854	1-230-868-11	RES, ADJ, METAL 2.2K				
		⟨ CRYSTAL ⟩				
X851	1-567-669-91	VIBRATOR, LITHIUM TANTALATE				
X852	1-567-346-11	OSCILLATOR, CERAMIC (5MHz)				
**********						
⚠	1-413-519-11	POWER BLOCK				
		**********				
	9-993-721-01	POWER BOARD				
		⟨ CAPACITOR ⟩				
C101	⚠ 9-993-698-01	FILM	0.1MF		125V	
C102	⚠ 9-993-699-01	FILM	0.0022MF		125V	
C103	⚠ 9-993-699-01	FILM	0.0022MF		125V	
C104	9-993-700-01	FILM	220MF		200V	
C105	1-136-187-21	FILM	0.047MF		250V	
C106	9-993-701-01	FILM	0.001MF		1KV	
C107	1-130-491-11	MYLAR	0.047MF		50V	
C108	1-130-487-11	MYLAR	0.022MF		50V	
C109	1-130-491-11	MYLAR	0.047MF		50V	
C110	1-130-495-11	MYLAR	0.1MF		50V	
C111	⚠ 9-993-699-01	MYLAR	0.0047MF		125V	
C112	⚠ 9-993-699-01	MYLAR	0.0047MF		125V	
C201	9-993-702-01	ELECT	2200MF		25V	
C202	1-124-126-11	ELECT	47MF		25V	
C203	1-123-875-11	ELECT	10MF		50V	
C204	9-993-705-01	ELECT	1000MF		16V	
C205	9-993-705-01	ELECT	1000MF		16V	
C206	9-993-703-01	ELECT	3900MF		10V	
C207	9-993-703-01	ELECT	3900MF		10V	

Ref. No.	Part No.	Description			Remark
C208	1-123-875-11	ELECT	10MF	50V	
C209	9-993-704-01	ELECT	1500MF	10V	
C210	9-993-704-01	ELECT	1500MF	10V	
C211	⚠ 9-993-706-01	ELECT	1MF	50V	
C212	⚠ 9-993-704-01	ELECT	1500MF	10V	
C213	1-124-787-11	ELECT	47MF	35V	
C214	1-123-875-11	ELECT	10MF	50V	
C215	1-123-875-11	ELECT	10MF	50V	
C216	1-130-483-11	MYLAR	0.01MF	50V	
C217	1-130-483-11	MYLAR	0.01MF	50V	
C218	9-993-704-01	ELECT	1500MF	10V	
C219	1-136-283-21	FILM	0.1MF	63V	
C220	9-993-206-01	ELECT	1MF	50V	
		⟨ DIODE ⟩			
D101	⚠ 8-719-500-04	DIODE S1WB40			
D102	9-993-709-01	DIODE SM-1FX08			
D103	9-993-710-01	DIODE 1SS144			
D104	9-993-711-01	DIODE DS442			
D105	9-993-711-01	DIODE DS442			
D201	8-719-907-40	DIODE ERB43-02			
D202	9-993-712-01	DIODE F10P04Q			
D203	9-993-712-01	DIODE F10P04Q			
D204	8-719-200-29	DIODE 11DQ04			
D205	8-719-907-40	DIODE ERB43-02			
D206	8-719-200-82	DIODE 11ES2			
D207	8-719-200-82	DIODE 11ES2			
D208	8-719-200-82	DIODE 11ES2			
		⟨ FUSE ⟩			
F101	⚠ 1-532-734-11	FUSE, GLASS TUBE (2A 125V)			
		⟨ IC ⟩			
IC201	⚠ 8-759-605-43	IC M5231TL			
IC202	⚠ 8-759-605-43	IC M5231TL			
IC203	9-993-714-01	IC L5431			
IC204	9-993-707-01	IC 97L09A			
		⟨ COIL ⟩			
L101	⚠ 9-993-715-01	COIL, CHOKE SU16V-10060			
L201	9-993-716-01	COIL, CHOKE 5uH			

The components identified by mark ⚠ or dotted line with mark ⚠ are critical for safety.
Replace only with part number specified.

Les composants identifiés par une marque ⚠ sont critiques pour la sécurité.
Ne les remplacer que par une piéce portant le numéro spécifié.

Ref. No.	Part No.	Description			Remark
L202	9-993-716-01	COIL, CHOKE 5uH			
L203	9-993-716-01	COIL, CHOKE 5uH			
L204	9-993-716-01	COIL, CHOKE 5uH			
		⟨ PHOTO COUPLER ⟩			
PC101 ⚠	8-719-902-56	PHOTO COUPLER PC-817			
PC102 ⚠	8-719-902-56	PHOTO COUPLER PC-817			
		⟨ TRANSISTOR ⟩			
Q101 ⚠	8-729-303-04	TRANSISTOR 2SC3832			
Q102 ⚠	8-729-906-02	TRANSISTOR 2SC2060Q			
Q201	8-729-281-53	TRANSISTOR 2SC1815			
Q202	9-993-708-01	TRANSISTOR 2SC4064			
Q203	8-729-281-53	TRANSISTOR 2SC1815			
Q204	9-993-708-01	TRANSISTOR 2SC4064			
Q205	8-729-281-53	TRANSISTOR 2SC1815			
Q207	8-729-202-45	TRANSISTOR 2SA1020			
		⟨ RESISTOR ⟩			
R102 ⚠	9-993-696-01	CARBON	0.82	2W	
R103 ⚠	9-993-697-01	METAL OXIDE	150K	1/2W	
R104 ⚠	1-206-696-61	METAL OXIDE	22K	2W	
R105 ⚠	1-206-479-61	METAL OXIDE	47	2W	
R106	9-993-688-01	CARBON	2200	1/5W	
R107	9-993-686-01	CARBON	1K	1/5W	
R108 ⚠	1-206-479-61	METAL OXIDE	47	2W	
R109	9-993-684-01	CARBON	470	1/5W	
R110	9-993-683-01	CARBON	390	1/5W	
R201	9-993-692-01	CARBON	10K	1/5W	
R202	9-993-692-01	CARBON	10K	1/5W	
R203	9-993-694-01	CARBON	47K	1/5W	
R204	9-993-694-01	CARBON	47K	1/5W	
R205	9-993-693-01	CARBON	12K	1/5W	
R206	9-993-693-01	CARBON	12K	1/5W	
R207	9-993-690-01	CARBON	3300	1/5W	
R208	9-993-694-01	CARBON	47K	1/5W	
R209	9-993-694-01	CARBON	47K	1/5W	
R210	9-993-686-01	CARBON	1K	1/5W	
R211	9-993-691-01	CARBON	4700	1/5W	
R212	9-993-690-01	CARBON	3300	1/5W	
R213	9-993-685-01	CARBON	680	1/5W	
R214	9-993-689-01	CARBON	2700	1/5W	
R215	9-993-688-01	CARBON	2200	1/5W	
R216	9-993-681-01	CARBON	47	1/5W	
R217	9-993-694-01	CARBON	47K	1/5W	
R218	9-993-694-01	CARBON	47K	1/5W	
R221	9-993-682-01	CARBON	330	1/5W	
R222	9-993-687-01	CARBON	1500	1/5W	
R101	9-993-695-01	THERMISTOR 100-9			
		⟨ VARIABLE RESISTOR ⟩			
RV201	9-993-718-01	RES, ADJ 5K			
RV202	9-993-719-01	RES, ADJ 2K			
RV203	9-993-719-01	RES, ADJ 2K			
		⟨ TRANSFORMER ⟩			
T101 ⚠	9-993-717-01	TRANSFOMER, DRIVE			
**********					
	A-7061-827-A	RP-73 (LP) BOARD, COMPLETE			
		**********			
		⟨ CAPACITOR ⟩			
C001	1-162-974-11	CERAMIC CHIP	0.01uF	50V	
C002	1-164-232-11	CERAMIC CHIP	0.01uF	50V	
C003	1-163-809-11	CERAMIC CHIP	0.047uF	10% 25V	
C005	1-164-330-21	CERAMIC CHIP	0.22uF	10% 16V	
C006	1-135-161-21	TANTALUM CHIP	22uF	10% 6.3V	
C007	1-163-077-00	CERAMIC CHIP	0.1uF	10% 25V	
C008	1-164-232-11	CERAMIC CHIP	0.01uF	50V	
C009	1-163-035-00	CERAMIC CHIP	0.047uF	50V	
C010	1-163-077-00	CERAMIC CHIP	0.1uF	10% 25V	
C011	1-164-232-11	CERAMIC CHIP	0.01uF	50V	
C012	1-164-330-21	CERAMIC CHIP	0.22uF	10% 16V	
C013	1-163-809-11	CERAMIC CHIP	0.047uF	10% 25V	
C015	1-162-974-11	CERAMIC CHIP	0.01uF	50V	
C016	1-164-232-11	CERAMIC CHIP	0.01uF	50V	
C017	1-164-232-11	CERAMIC CHIP	0.01uF	50V	
C020	1-164-232-11	CERAMIC CHIP	0.01uF	50V	
C021	1-162-974-11	CERAMIC CHIP	0.01uF	50V	
C022	1-135-091-00	TANTALUM CHIP	1uF	20% 16V	
C023	1-135-157-21	TANTALUM CHIP	10uF	20% 6.3V	
C024	1-164-232-11	CERAMIC CHIP	0.01uF	50V	

The components identified by mark ⚠ or dotted line with mark ⚠ are critical for safety.
Replace only with part number specified.

Les composants identifiés par une marque ⚠ sont critiques pour la sécurité.
Ne les remplacer que par une piéce portant le numéro spécifié.

RP-73 (LP)

Ref. No.	Part No.	Description			Remark
C025	1-164-232-11	CERAMIC CHIP	0.01uF	50V	
C027	1-135-091-00	TANTALUM CHIP	1uF	20% 16V	
C028	1-163-809-11	CERAMIC CHIP	0.047uF	10% 25V	
C029	1-163-809-11	CERAMIC CHIP	0.047uF	10% 25V	
C030	1-162-974-11	CERAMIC CHIP	0.01uF	50V	
C031	1-164-218-11	CERAMIC CHIP	180PF	0.25PF 50V	
C032	1-162-918-11	CERAMIC CHIP	18PF	5% 50V	
C033	1-163-809-11	CERAMIC CHIP	0.047uF	10% 25V	
C034	1-162-912-11	CERAMIC CHIP	7PF	0.5PF 50V	
C035	1-162-974-11	CERAMIC CHIP	0.01uF	50V	
C036	1-164-218-11	CERAMIC CHIP	180PF	0.25PF 50V	
C037	1-162-918-11	CERAMIC CHIP	18PF	5% 50V	
C038	1-163-809-11	CERAMIC CHIP	0.047uF	10% 25V	
C039	1-162-912-11	CERAMIC CHIP	7PF	0.5PF 50V	
C040	1-162-913-11	CERAMIC CHIP	8PF	0.5PF 50V	
C041	1-162-913-11	CERAMIC CHIP	8PF	0.5PF 50V	
C042	1-135-157-21	TANTALUM CHIP	10uF	20% 6.3V	
C043	1-135-157-21	TANTALUM CHIP	10uF	20% 6.3V	
C044	1-162-974-11	CERAMIC CHIP	0.01uF	50V	
C045	1-163-097-00	CERAMIC CHIP	15PF	5% 50V	
C046	1-163-097-00	CERAMIC CHIP	15PF	5% 50V	
		〈 DIODE 〉			
D001	8-719-801-41	DIODE 1SS196			
D002	8-719-801-41	DIODE 1SS196			
		〈 IC 〉			
IC001	8-752-033-00	IC CXA1234AR			
		〈 COIL 〉			
L001	1-410-385-11	INDUCTOR CHIP	22uH		
L002	1-410-656-11	INDUCTOR CHIP	150uH		
L004	1-410-393-11	INDUCTOR CHIP	100uH		
L005	1-410-381-11	INDUCTOR CHIP	10uH		
L007	1-410-393-11	INDUCTOR CHIP	100uH		
L008	1-410-384-31	INDUCTOR CHIP	18uH		
L009	1-410-384-31	INDUCTOR CHIP	18uH		
L031	1-408-777-00	INDUCTOR CHIP	10uH		
L041	1-408-793-21	INDUCTOR CHIP	220uH		
L042	1-408-777-00	INDUCTOR CHIP	10uH		
L051	1-408-785-21	INDUCTOR CHIP	47uH		

Ref. No.	Part No.	Description				Remark
		〈 TRANSISTOR 〉				
Q002	8-729-102-07	TRANSISTOR 2SC2223-F13				
Q003	8-729-102-07	TRANSISTOR 2SC2223-F13				
		〈 RESISTOR 〉				
R001	1-216-089-00	METAL CHIP	47K	5%	1/10W	
R002	1-216-073-00	METAL CHIP	10K	5%	1/10W	
R003	1-216-081-00	METAL CHIP	22K	5%	1/10W	
R004	1-216-055-00	METAL CHIP	1.8K	5%	1/10W	
R005	1-216-824-11	METAL CHIP	1.8K	5%	1/16W	
R006	1-216-081-00	METAL CHIP	22K	5%	1/10W	
R007	1-216-834-11	METAL CHIP	12K	5%	1/16W	
R008	1-216-835-11	METAL CHIP	15K	5%	1/16W	
R009	1-216-081-00	METAL CHIP	22K	5%	1/10W	
R010	1-216-089-00	METAL CHIP	47K	5%	1/10W	
R011	1-216-073-00	METAL CHIP	10K	5%	1/10W	
R012	1-216-081-00	METAL CHIP	22K	5%	1/10W	
R013	1-216-055-00	METAL CHIP	1.8K	5%	1/10W	
R014	1-216-824-11	METAL CHIP	1.8K	5%	1/16W	
R015	1-216-085-00	METAL CHIP	33K	5%	1/10W	
R016	1-216-081-00	METAL CHIP	22K	5%	1/10W	
R017	1-216-085-00	METAL CHIP	33K	5%	1/10W	
R018	1-216-081-00	METAL CHIP	22K	5%	1/10W	
R019	1-216-089-00	METAL CHIP	47K	5%	1/10W	
R020	1-216-055-00	METAL CHIP	1.8K	5%	1/10W	
R021	1-216-055-00	METAL CHIP	1.8K	5%	1/10W	
R026	1-216-837-11	METAL CHIP	22K	5%	1/16W	
R027	1-216-833-11	METAL CHIP	10K	5%	1/16W	
R028	1-216-797-11	METAL CHIP	10	5%	1/16W	
R029	1-216-812-11	METAL CHIP	180	5%	1/16W	
R030	1-216-837-11	METAL CHIP	22K	5%	1/16W	
R031	1-216-833-11	METAL CHIP	10K	5%	1/16W	
R032	1-216-797-11	METAL CHIP	10	5%	1/16W	
R033	1-216-812-11	METAL CHIP	180	5%	1/16W	
		〈 VARIABLE RESISTOR 〉				
RV001	1-230-871-11	RES, ADJ, METAL	22K			
RV002	1-230-871-11	RES, ADJ, METAL	22K			
RV003	1-230-869-11	RES, ADJ, METAL	4.7K			
RV004	1-230-869-11	RES, ADJ, METAL	4.7K			

Ref. No.	Part No.	Description			Remark
**********					
	A-7061-822-A	RP-73 (SP) BOARD, COMPLETE			
		**********			
		〈 CAPACITOR 〉			
C001	1-162-974-11	CERAMIC CHIP	0.01uF		50V
C002	1-164-232-11	CERAMIC CHIP	0.01uF		50V
C003	1-163-809-11	CERAMIC CHIP	0.047uF	10%	25V
C005	1-164-330-21	CERAMIC CHIP	0.22uF	10%	16V
C006	1-135-161-21	TANTALUM CHIP	22uF	10%	6.3V
C007	1-163-077-00	CERAMIC CHIP	0.1uF	10%	25V
C008	1-164-232-11	CERAMIC CHIP	0.01uF		50V
C009	1-163-035-00	CERAMIC CHIP	0.047uF		50V
C010	1-163-077-00	CERAMIC CHIP	0.1uF	10%	25V
C011	1-164-232-11	CERAMIC CHIP	0.01uF		50V
C012	1-164-330-21	CERAMIC CHIP	0.22uF	10%	16V
C013	1-163-809-11	CERAMIC CHIP	0.047uF	10%	25V
C015	1-162-974-11	CERAMIC CHIP	0.01uF		50V
C016	1-164-232-11	CERAMIC CHIP	0.01uF		50V
C017	1-164-232-11	CERAMIC CHIP	0.01uF		50V
C020	1-164-232-11	CERAMIC CHIP	0.01uF		50V
C021	1-162-974-11	CERAMIC CHIP	0.01uF		50V
C022	1-135-091-00	TANTALUM CHIP	1uF	20%	16V
C023	1-135-157-21	TANTALUM CHIP	10uF	20%	6.3V
C024	1-164-232-11	CERAMIC CHIP	0.01uF		50V
C025	1-164-232-11	CERAMIC CHIP	0.01uF		50V
C027	1-135-091-00	TANTALUM CHIP	1uF	20%	16V
C028	1-163-809-11	CERAMIC CHIP	0.047uF	10%	25V
C029	1-163-809-11	CERAMIC CHIP	0.047uF	10%	25V
C030	1-162-974-11	CERAMIC CHIP	0.01uF		50V
C031	1-164-218-11	CERAMIC CHIP	180PF	0.25PF	50V
C032	1-162-918-11	CERAMIC CHIP	18PF	5%	50V
C033	1-163-809-11	CERAMIC CHIP	0.047uF	10%	25V
C034	1-162-912-11	CERAMIC CHIP	7PF	0.5PF	50V
C035	1-162-974-11	CERAMIC CHIP	0.01uF		50V
C036	1-164-218-11	CERAMIC CHIP	180PF	0.25PF	50V
C037	1-162-918-11	CERAMIC CHIP	18PF	5%	50V
C038	1-163-809-11	CERAMIC CHIP	0.047uF	10%	25V
C039	1-162-912-11	CERAMIC CHIP	7PF	0.5PF	50V
C040	1-162-913-11	CERAMIC CHIP	8PF	0.5PF	50V
C041	1-162-913-11	CERAMIC CHIP	8PF	0.5PF	50V
C042	1-135-157-21	TANTALUM CHIP	10uF	20%	6.3V
C043	1-135-157-21	TANTALUM CHIP	10uF	20%	6.3V
C044	1-162-974-11	CERAMIC CHIP	0.01uF		50V
C045	1-163-097-00	CERAMIC CHIP	15PF	5%	50V
C046	1-163-097-00	CERAMIC CHIP	15PF	5%	50V
		〈 DIODE 〉			
D001	8-719-801-41	DIODE 1SS196			
D002	8-719-801-41	DIODE 1SS196			
		〈 IC 〉			
IC001	8-752-033-00	IC CXA1234AR			
		〈 COIL 〉			
L001	1-410-385-11	INDUCTOR CHIP	22uH		
L002	1-410-656-11	INDUCTOR CHIP	150uH		
L004	1-410-393-11	INDUCTOR CHIP	100uH		
L005	1-410-381-11	INDUCTOR CHIP	10uH		
L007	1-410-393-11	INDUCTOR CHIP	100uH		
L008	1-410-384-31	INDUCTOR CHIP	18uH		
L009	1-410-384-31	INDUCTOR CHIP	18uH		
L031	1-408-777-00	INDUCTOR CHIP	10uH		
L041	1-408-793-21	INDUCTOR CHIP	220uH		
L042	1-408-777-00	INDUCTOR CHIP	10uH		
L051	1-408-785-21	INDUCTOR CHIP	47uH		
		〈 TRANSISTOR 〉			
Q002	8-729-102-07	TRANSISTOR 2SC2223-F13			
Q003	8-729-102-07	TRANSISTOR 2SC2223-F13			
		〈 RESISTOR 〉			
R001	1-216-089-00	METAL CHIP	47K	5%	1/10W
R002	1-216-073-00	METAL CHIP	10K	5%	1/10W
R003	1-216-081-00	METAL CHIP	22K	5%	1/10W
R004	1-216-055-00	METAL CHIP	1.8K	5%	1/10W
R005	1-216-824-11	METAL CHIP	1.8K	5%	1/16W
R006	1-216-081-00	METAL CHIP	22K	5%	1/10W
R007	1-216-836-11	METAL CHIP	18K	5%	1/16W
R008	1-216-837-11	METAL CHIP	22K	5%	1/16W
R009	1-216-081-00	METAL CHIP	22K	5%	1/10W
R010	1-216-089-00	METAL CHIP	47K	5%	1/10W

RP-73 (SP) | RS-31

Ref. No.	Part No.	Description				Remark
R011	1-216-073-00	METAL CHIP	10K	5%	1/10W	
R012	1-216-081-00	METAL CHIP	22K	5%	1/10W	
R013	1-216-055-00	METAL CHIP	1.8K	5%	1/10W	
R014	1-216-824-11	METAL CHIP	1.8K	5%	1/16W	
R015	1-216-085-00	METAL CHIP	33K	5%	1/10W	
R016	1-216-081-00	METAL CHIP	22K	5%	1/10W	
R017	1-216-085-00	METAL CHIP	33K	5%	1/10W	
R018	1-216-081-00	METAL CHIP	22K	5%	1/10W	
R019	1-216-089-00	METAL CHIP	47K	5%	1/10W	
R020	1-216-053-00	METAL CHIP	1.5K	5%	1/10W	
R021	1-216-053-00	METAL CHIP	1.5K	5%	1/10W	
R026	1-216-837-11	METAL CHIP	22K	5%	1/16W	
R027	1-216-833-11	METAL CHIP	10K	5%	1/16W	
R028	1-216-797-11	METAL CHIP	10	5%	1/16W	
R029	1-216-812-11	METAL CHIP	180	5%	1/16W	
R030	1-216-837-11	METAL CHIP	22K	5%	1/16W	
R031	1-216-833-11	METAL CHIP	10K	5%	1/16W	
R032	1-216-797-11	METAL CHIP	10	5%	1/16W	
R033	1-216-812-11	METAL CHIP	180	5%	1/16W	
		〈 VARIABLE RESISTOR 〉				
RV001	1-230-871-11	RES, ADJ, METAL 22K				
RV002	1-230-871-11	RES, ADJ, METAL 22K				
RV003	1-230-869-11	RES, ADJ, METAL 4.7K				
RV004	1-230-869-11	RES, ADJ, METAL 4.7K				

****

* A-7061-818-A RS-31 BOARD, COMPLETE
****

* 1-559-762-11 WIRE, FLAT TYPE 22P
3-712-410-01 HOLDER, RS
3-722-175-01 SPACER, MD

〈 CONNECTOR 〉

CN301	1-506-481-11	CONNECTOR 2P, MALE
CN302	1-506-481-11	CONNECTOR 2P, MALE
CN304	* 1-563-494-11	CONNECTOR, F.P.C 6P
CN305	* 1-565-211-11	CONNECTOR, FPC (ZIF) 22P

〈 DIODE 〉

D320	8-719-800-76	DIODE 1SS226
D321	8-719-800-76	DIODE 1SS226

〈 IC 〉

IC301	8-759-908-81	IC MB3763PF
IC302	8-759-908-81	IC MB3763PF

〈 PHOTO INTERUPTER 〉

PH301	8-719-939-11	PHOTO INTERRUPTER GP-2S09-B
PH302	8-719-939-11	PHOTO INTERRUPTER GP-2S09-B
PH303	8-719-939-11	PHOTO INTERRUPTER GP-2S09-B

〈 LINK IC 〉

PS301 ⚠	1-532-727-11	LINK, IC (0.25A 125V)

〈 TRANSISTOR 〉

Q301	8-729-805-25	TRANSISTOR 2SB1121
Q302	8-729-216-22	TRANSISTOR 2SA1162
Q303	8-729-216-22	TRANSISTOR 2SA1162
Q304	8-729-216-22	TRANSISTOR 2SA1162
Q305	8-729-901-01	TRANSISTOR DTC144EK
Q306	8-729-901-01	TRANSISTOR DTC144EK
Q307	8-729-901-01	TRANSISTOR DTC144EK

〈 RESISTOR 〉

R302	1-216-174-00	METAL GLAZE	100	5%	1/8W
R303	1-216-186-00	METAL GLAZE	330	5%	1/8W
R304	1-216-089-00	METAL CHIP	47K	5%	1/10W
R305	1-216-089-00	METAL CHIP	47K	5%	1/10W
R306	1-216-089-00	METAL CHIP	47K	5%	1/10W
R307	1-216-073-00	METAL CHIP	10K	5%	1/10W
R308	1-216-073-00	METAL CHIP	10K	5%	1/10W
R309	1-216-073-00	METAL CHIP	10K	5%	1/10W
R320	1-216-041-00	METAL CHIP	470	5%	1/10W
R321	1-216-041-00	METAL CHIP	470	5%	1/10W
R322	1-216-073-00	METAL CHIP	10K	5%	1/10W
R323	1-216-073-00	METAL CHIP	10K	5%	1/10W
R324	1-216-073-00	METAL CHIP	10K	5%	1/10W
R325	1-216-073-00	METAL CHIP	10K	5%	1/10W
R326	1-216-073-00	METAL CHIP	10K	5%	1/10W
R327	1-216-073-00	METAL CHIP	10K	5%	1/10W
R328	1-216-073-00	METAL CHIP	10K	5%	1/10W

The components identified by mark ⚠ or dotted line with mark ⚠ are critical for safety.
Replace only with part number specified.

Les composants identifiés par une marque ⚠ sont critiques pour la sécurité.
Ne les remplacer que par une piéce portant le numéro spécifié.

Ref. No.	Part No.	Description				Remark
R329	1-216-073-00	METAL CHIP	10K	5%	1/10W	
R330	1-216-073-00	METAL CHIP	10K	5%	1/10W	
R331	1-216-073-00	METAL CHIP	10K	5%	1/10W	
R332	1-216-073-00	METAL CHIP	10K	5%	1/10W	

****

* A-7061-823-A SE-10 BOARD, COMPLETE
****

3-831-441-XX CUSHION (5)

< CAPACITOR >

C006	1-126-157-11	ELECT	10uF	20%	16V
C008	1-163-095-00	CERAMIC CHIP	12PF	5%	50V
C009	1-163-095-00	CERAMIC CHIP	12PF	5%	50V
C010	1-163-105-00	CERAMIC CHIP	33PF	5%	50V
C011	1-163-105-00	CERAMIC CHIP	33PF	5%	50V
C012	1-126-163-11	ELECT	4.7uF	20%	50V
C013	1-126-157-11	ELECT	10uF	20%	16V
C014	1-163-105-00	CERAMIC CHIP	33PF	5%	50V
C015	1-163-105-00	CERAMIC CHIP	33PF	5%	50V
C016	1-163-077-00	CERAMIC CHIP	0.1uF	10%	25V
C017	1-163-251-11	CERAMIC CHIP	100PF	5%	50V
C018	1-163-251-11	CERAMIC CHIP	100PF	5%	50V
C019	1-163-038-00	CERAMIC CHIP	0.1uF		25V
C020	1-164-232-11	CERAMIC CHIP	0.01uF		50V
C021	1-163-038-00	CERAMIC CHIP	0.1uF		25V
C022	1-164-232-11	CERAMIC CHIP	0.01uF		50V
C024	1-164-232-11	CERAMIC CHIP	0.01uF		50V
C025	1-164-232-11	CERAMIC CHIP	0.01uF		50V
C026	1-164-232-11	CERAMIC CHIP	0.01uF		50V
C027	1-164-232-11	CERAMIC CHIP	0.01uF		50V
C028	1-164-232-11	CERAMIC CHIP	0.01uF		50V
C031	1-163-038-00	CERAMIC CHIP	0.1uF		25V
C032	1-163-038-00	CERAMIC CHIP	0.1uF		25V
C033	1-163-038-00	CERAMIC CHIP	0.1uF		25V
C034	1-164-232-11	CERAMIC CHIP	0.01uF		50V
C035	1-163-038-00	CERAMIC CHIP	0.1uF		25V
C036	1-163-038-00	CERAMIC CHIP	0.1uF		25V
C037	1-163-038-00	CERAMIC CHIP	0.1uF		25V
C101	1-126-157-11	ELECT	10uF	20%	16V

Ref. No.	Part No.	Description			Remark
C102	1-164-232-11	CERAMIC CHIP	0.01uF		50V
C103	1-164-232-11	CERAMIC CHIP	0.01uF		50V
C104	1-164-232-11	CERAMIC CHIP	0.01uF		50V
C105	1-163-263-11	CERAMIC CHIP	330PF	5%	50V
C106	1-163-109-00	CERAMIC CHIP	47PF	5%	50V
C107	1-163-109-00	CERAMIC CHIP	47PF	5%	50V
C108	1-163-017-00	CERAMIC CHIP	0.0047uF	5%	50V
C109	1-163-019-00	CERAMIC CHIP	0.0068uF	10%	50V
C110	1-126-320-11	ELECT, NONPOLAR	10uF	20%	16V
C111	1-163-037-11	CERAMIC CHIP	0.022uF	10%	25V
C112	1-163-037-11	CERAMIC CHIP	0.022uF	10%	25V
C113	1-163-809-11	CERAMIC CHIP	0.047uF	10%	25V
C114	1-163-017-00	CERAMIC CHIP	0.0047uF	5%	50V
C115	1-126-157-11	ELECT	10uF	20%	16V
C116	1-124-499-11	ELECT, NONPOLAR	1uF	20%	50V
C117	1-163-109-00	CERAMIC CHIP	47PF	5%	50V
C119	1-163-017-00	CERAMIC CHIP	0.0047uF	5%	50V
C120	1-163-209-00	CERAMIC CHIP	0.0015uF	5%	50V
C121	1-163-209-00	CERAMIC CHIP	0.0015uF	5%	50V
C122	1-164-232-11	CERAMIC CHIP	0.01uF		50V
C127	1-163-809-11	CERAMIC CHIP	0.047uF	10%	25V
C128	1-124-767-00	ELECT	2.2uF	20%	50V
C129	1-126-163-11	ELECT	4.7uF	20%	50V
C130	1-163-809-11	CERAMIC CHIP	0.047uF	10%	25V
C131	1-164-232-11	CERAMIC CHIP	0.01uF		50V
C132	1-164-232-11	CERAMIC CHIP	0.01uF		50V
C133	1-164-232-11	CERAMIC CHIP	0.01uF		50V
C134	1-124-499-11	ELECT, NONPOLAR	1uF	20%	50V
C135	1-163-017-00	CERAMIC CHIP	0.0047uF	5%	50V
C136	1-164-232-11	CERAMIC CHIP	0.01uF		50V
C137	1-124-768-11	ELECT	4.7uF	20%	50V
C201	1-163-038-00	CERAMIC CHIP	0.1uF		25V
C202	1-163-123-00	CERAMIC CHIP	180PF	5%	50V
C203	1-163-137-00	CERAMIC CHIP	680PF	5%	50V
C204	1-163-105-00	CERAMIC CHIP	33PF	5%	50V
C205	1-164-232-11	CERAMIC CHIP	0.01uF		50V
C206	1-164-232-11	CERAMIC CHIP	0.01uF		50V
C207	1-163-141-00	CERAMIC CHIP	0.001uF	5%	50V
C208	1-163-037-11	CERAMIC CHIP	0.022uF	10%	25V
C209	1-163-809-11	CERAMIC CHIP	0.047uF	10%	25V
C210	1-124-234-00	ELECT	22uF	20%	16V

SE-10

Ref. No.	Part No.	Description			Remark
C211	1-164-232-11	CERAMIC CHIP	0.01uF		50V
C212	1-163-809-11	CERAMIC CHIP	0.047uF	10%	25V
C213	1-163-809-11	CERAMIC CHIP	0.047uF	10%	25V
C214	1-164-232-11	CERAMIC CHIP	0.01uF		50V
C215	1-164-232-11	CERAMIC CHIP	0.01uF		50V
C216	1-163-038-00	CERAMIC CHIP	0.1uF		25V
C217	1-163-809-11	CERAMIC CHIP	0.047uF	10%	25V
C218	1-163-989-11	CERAMIC CHIP	0.033uF	10%	25V
C219	1-164-232-11	CERAMIC CHIP	0.01uF		50V
C220	1-164-232-11	CERAMIC CHIP	0.01uF		50V
C221	1-124-256-00	ELECT	1.5uF	20%	50V
C223	1-163-038-00	CERAMIC CHIP	0.1uF		25V
C224	1-164-232-11	CERAMIC CHIP	0.01uF		50V
C226	1-164-232-11	CERAMIC CHIP	0.01uF		50V
C301	1-164-232-11	CERAMIC CHIP	0.01uF		50V
C302	1-164-232-11	CERAMIC CHIP	0.01uF		50V
C303	1-164-232-11	CERAMIC CHIP	0.01uF		50V
C304	1-124-584-00	ELECT	100uF	20%	10V
C305	1-164-232-11	CERAMIC CHIP	0.01uF		50V
C306	1-124-584-00	ELECT	100uF	20%	10V
C307	1-126-163-11	ELECT	4.7uF	20%	50V
C308	1-124-257-00	ELECT	2.2uF	20%	50V
C309	1-164-232-11	CERAMIC CHIP	0.01uF		50V
C310	1-163-077-00	CERAMIC CHIP	0.1uF	10%	25V
C311	1-163-038-00	CERAMIC CHIP	0.1uF		25V
C401	1-164-232-11	CERAMIC CHIP	0.01uF		50V
C402	1-163-103-00	CERAMIC CHIP	27PF	5%	50V
C403	1-126-163-11	ELECT	4.7uF	20%	50V
C404	1-126-163-11	ELECT	4.7uF	20%	50V
C405	1-164-232-11	CERAMIC CHIP	0.01uF		50V
C406	1-163-235-11	CERAMIC CHIP	22PF	5%	50V
C407	1-163-035-00	CERAMIC CHIP	0.047uF		50V
C408	1-163-809-11	CERAMIC CHIP	0.047uF	10%	25V
C409	1-164-232-11	CERAMIC CHIP	0.01uF		50V
C410	1-163-125-00	CERAMIC CHIP	220PF	5%	50V
C411	1-163-035-00	CERAMIC CHIP	0.047uF		50V
C412	1-126-157-11	ELECT	10uF	20%	16V
C502	1-163-038-00	CERAMIC CHIP	0.1uF		25V
C503	1-164-232-11	CERAMIC CHIP	0.01uF		50V
C504	1-124-257-00	ELECT	2.2uF	20%	50V
C505	1-163-038-00	CERAMIC CHIP	0.1uF		25V
C506	1-164-232-11	CERAMIC CHIP	0.01uF		50V

Ref. No.	Part No.	Description			Remark
C508	1-124-589-11	ELECT	47uF	20%	16V
C601	1-164-232-11	CERAMIC CHIP	0.01uF		50V
C602	1-163-035-00	CERAMIC CHIP	0.047uF		50V
C603	1-163-035-00	CERAMIC CHIP	0.047uF		50V
C604	1-124-589-11	ELECT	47uF	20%	16V
C605	1-163-035-00	CERAMIC CHIP	0.047uF		50V
C606	1-163-809-11	CERAMIC CHIP	0.047uF	10%	25V
C607	1-163-809-11	CERAMIC CHIP	0.047uF	10%	25V
C608	1-163-809-11	CERAMIC CHIP	0.047uF	10%	25V
C609	1-163-035-00	CERAMIC CHIP	0.047uF		50V
C610	1-163-009-11	CERAMIC CHIP	0.001uF	10%	50V
C611	1-126-157-11	ELECT	10uF	20%	16V
C612	1-126-157-11	ELECT	10uF	20%	16V
C613	1-163-009-11	CERAMIC CHIP	0.001uF	10%	50V
C614	1-164-232-11	CERAMIC CHIP	0.01uF		50V
C615	1-164-232-11	CERAMIC CHIP	0.01uF		50V
C616	1-164-633-11	CERAMIC CHIP	0.1uF	10%	25V
C617	1-164-232-11	CERAMIC CHIP	0.01uF		50V
C620	1-163-009-11	CERAMIC CHIP	0.001uF	10%	50V
C621	1-163-009-11	CERAMIC CHIP	0.001uF	10%	50V
C622	1-163-009-11	CERAMIC CHIP	0.001uF	10%	50V
C623	1-163-009-11	CERAMIC CHIP	0.001uF	10%	50V
C624	1-163-009-11	CERAMIC CHIP	0.001uF	10%	50V
C625	1-163-009-11	CERAMIC CHIP	0.001uF	10%	50V
C626	1-163-009-11	CERAMIC CHIP	0.001uF	10%	50V
C627	1-163-009-11	CERAMIC CHIP	0.001uF	10%	50V
C628	1-163-009-11	CERAMIC CHIP	0.001uF	10%	50V
C629	1-163-009-11	CERAMIC CHIP	0.001uF	10%	50V
C630	1-163-009-11	CERAMIC CHIP	0.001uF	10%	50V
C631	1-163-037-11	CERAMIC CHIP	0.022uF	10%	25V
C632	1-126-157-11	ELECT	10uF	20%	16V

〈 CONNECTOR 〉

CN001	*	1-566-641-11	CONNECTOR, HINGE (TAB) 18P
CN002	*	1-566-941-11	CONNECTOR, HINGE (TAB) 30P
CN003	*	1-566-641-11	CONNECTOR, HINGE (TAB) 18P
CN004		1-566-943-11	CONNECTOR, BOARD TO BOARD 18P
CN004		1-566-945-11	CONNECTOR, BOARD TO BOARD 18P
CN005		1-566-944-11	CONNECTOR, BOARD TO BOARD 22P
CN005		1-566-946-11	CONNECTOR, BOARD TO BOARD 22P
CN006		1-566-945-11	CONNECTOR, BOARD TO BOARD 18P
CN007		1-566-945-11	CONNECTOR, BOARD TO BOARD 18P

Ref. No.	Part No.	Description	Remark
CN011	1-565-212-11	CONNECTOR, FPC (ZIF) 26P	
CN012	* 1-565-211-11	CONNECTOR, FPC (ZIF) 22P	
CN901	1-506-473-11	CONNECTOR 8P, MALE	
CN902	1-506-477-11	CONNECTOR 12P, MALE	
CN903	1-506-478-11	CONNECTOR 13P, MALE	
CN904	1-506-470-11	CONNECTOR 5P, MALE	
CN905	1-506-474-11	CONNECTOR 9P, MALE	
CN906	1-506-472-11	CONNECTOR 7P, MALE	
CN907	1-506-477-11	CONNECTOR 12P, MALE	
		⟨ DIODE ⟩	
D003	8-719-400-18	DIODE MA152WK	
D004	8-719-400-18	DIODE MA152WK	
D005	8-719-400-18	DIODE MA152WK	
D006	8-719-104-34	DIODE 1S2836	
D007	8-719-400-18	DIODE MA152WK	
D008	8-719-400-18	DIODE MA152WK	
D009	8-719-400-18	DIODE MA152WK	
D012	8-719-400-18	DIODE MA152WK	
D013	8-719-400-18	DIODE MA152WK	
D015	8-719-104-34	DIODE 1S2836	
D016	8-719-104-34	DIODE 1S2836	
D018	8-719-400-18	DIODE MA152WK	
D101	8-719-800-76	DIODE 1SS226	
D102	8-719-800-76	DIODE 1SS226	
D104	8-719-104-34	DIODE 1S2836	
D105	8-719-400-18	DIODE MA152WK	
D106	8-719-400-18	DIODE MA152WK	
D107	8-719-104-34	DIODE 1S2836	
D108	8-719-400-18	DIODE MA152WK	
D109	8-719-400-18	DIODE MA152WK	
D110	8-719-104-34	DIODE 1S2836	
D111	8-719-400-18	DIODE MA152WK	
D112	8-719-104-34	DIODE 1S2836	
D115	8-719-104-34	DIODE 1S2836	
D201	8-719-400-18	DIODE MA152WK	
D203	8-719-105-82	DIODE RD5.1M	
D203	8-719-105-83	DIODE RD5.1M	
D301	8-719-400-18	DIODE MA152WK	
D302	8-719-400-18	DIODE MA152WK	
D401	8-719-800-76	DIODE 1SS226	
D701	8-719-400-18	DIODE MA152WK	
		⟨ FILTER ⟩	
FL201	1-235-611-11	BPF	
FL202	1-235-612-11	BPF	
		⟨ IC ⟩	
IC001	8-752-816-72	IC CXP80116-692Q	
IC002	8-752-817-63	IC CXP5048H-243Q	
IC003	8-752-815-13	IC CXP5048H-222Q	
IC004	8-759-144-21	IC uPD75106G-573	
IC007	8-759-008-67	IC TC4066BF	
IC008	8-759-937-56	IC S-8054ALB-LM	
IC009	8-759-209-15	IC TC4SU69F	
IC101	8-752-003-50	IC CX20035	
IC102	8-759-803-47	IC LA5005M	
IC103	8-759-925-66	IC BA6303F	
IC104	8-759-981-75	IC RC3403AM	
IC105	8-759-300-71	IC TC4053BF	
IC106	8-759-971-25	IC MB674169U	
IC107	8-759-100-94	IC uPC358G2	
IC108	8-759-008-67	IC TC4066BF	
IC201	8-759-928-56	IC CXA1042M	
IC202	8-759-150-05	IC uPC324G2	
IC203	8-759-300-71	IC TC4053BF	
IC204	8-759-927-46	IC SN74HC00ANS	
IC206	8-759-035-93	IC TC7S32F	
IC301	8-759-100-94	IC uPC358G2	
IC302	8-759-300-71	IC TC4053BF	
IC303	8-759-300-71	IC TC4053BF	
IC304	8-759-200-90	IC TC4538BF	
IC305	8-759-927-46	IC SN74HC00ANS	
IC601	8-759-927-94	IC BU3707F	
IC602	8-759-927-52	IC BA7036LS	
IC603	8-759-100-93	IC uPC393G2	
IC604	8-759-150-05	IC uPC324G2	
IC651	8-759-711-79	IC NJM2233BM	
		⟨ COIL ⟩	
L001	1-408-777-00	INDUCTOR CHIP 10uH	
L002	1-408-777-00	INDUCTOR CHIP 10uH	
L003	1-408-777-00	INDUCTOR CHIP 10uH	

SE-10

Ref. No.	Part No.	Description	Remark
L101	1-408-777-00	INDUCTOR CHIP 10uH	
L401	1-408-777-00	INDUCTOR CHIP 10uH	
L402	1-408-777-00	INDUCTOR CHIP 10uH	
L403	1-408-783-00	INDUCTOR CHIP 33uH	
L404	1-408-777-00	INDUCTOR CHIP 10uH	
L501	1-408-777-00	INDUCTOR CHIP 10uH	
L601	1-408-777-00	INDUCTOR CHIP 10uH	
L602	1-408-777-00	INDUCTOR CHIP 10uH	
		〈 LINK IC 〉	
PS601	⚠ 1-532-679-00	LINK, IC	
		〈 TRANSISTOR 〉	
Q002	8-729-901-01	TRANSISTOR DTC144EK	
Q003	8-729-901-06	TRANSISTOR DTA144EK	
Q004	8-729-901-01	TRANSISTOR DTC144EK	
Q005	8-729-901-01	TRANSISTOR DTC144EK	
Q006	8-729-901-01	TRANSISTOR DTC144EK	
Q007	8-729-901-01	TRANSISTOR DTC144EK	
Q008	8-729-901-01	TRANSISTOR DTC144EK	
Q009	8-729-901-01	TRANSISTOR DTC144EK	
Q010	8-729-901-06	TRANSISTOR DTA144EK	
Q011	8-729-901-06	TRANSISTOR DTA144EK	
Q014	8-729-901-01	TRANSISTOR DTC144EK	
Q015	8-729-901-01	TRANSISTOR DTC144EK	
Q018	8-729-901-01	TRANSISTOR DTC144EK	
Q101	8-729-901-06	TRANSISTOR DTA144EK	
Q102	8-729-901-06	TRANSISTOR DTA144EK	
Q103	8-729-901-06	TRANSISTOR DTA144EK	
Q104	8-729-901-01	TRANSISTOR DTC144EK	
Q106	8-729-100-66	TRANSISTOR 2SC1623	
Q107	8-729-901-06	TRANSISTOR DTA144EK	
Q108	8-729-901-06	TRANSISTOR DTA144EK	
Q109	8-729-901-06	TRANSISTOR DTA144EK	
Q110	8-729-901-06	TRANSISTOR DTA144EK	
Q111	8-729-100-66	TRANSISTOR 2SC1623	
Q112	8-729-901-01	TRANSISTOR DTC144EK	
Q113	8-729-901-01	TRANSISTOR DTC144EK	
Q114	8-729-901-01	TRANSISTOR DTC144EK	
Q115	8-729-901-01	TRANSISTOR DTC144EK	
Q116	8-729-901-06	TRANSISTOR DTA144EK	
Q117	8-729-901-06	TRANSISTOR DTA144EK	
Q202	8-729-216-22	TRANSISTOR 2SA1162	
Q205	8-729-901-01	TRANSISTOR DTC144EK	
Q209	8-729-901-06	TRANSISTOR DTA144EK	
Q210	8-729-901-01	TRANSISTOR DTC144EK	
Q301	8-729-901-06	TRANSISTOR DTA144EK	
Q302	8-729-901-01	TRANSISTOR DTC144EK	
Q303	8-729-901-01	TRANSISTOR DTC144EK	
Q304	8-729-901-01	TRANSISTOR DTC144EK	
Q305	8-729-901-01	TRANSISTOR DTC144EK	
Q306	8-729-901-06	TRANSISTOR DTA144EK	
Q307	8-729-901-01	TRANSISTOR DTC144EK	
Q308	8-729-901-01	TRANSISTOR DTC144EK	
Q309	8-729-901-01	TRANSISTOR DTC144EK	
Q401	8-729-216-22	TRANSISTOR 2SA1162	
Q402	8-729-100-66	TRANSISTOR 2SC1623	
Q403	8-729-100-66	TRANSISTOR 2SC1623	
Q404	8-729-216-22	TRANSISTOR 2SA1162	
Q405	8-729-100-66	TRANSISTOR 2SC1623	
Q406	8-729-216-22	TRANSISTOR 2SA1162	
Q407	8-729-100-66	TRANSISTOR 2SC1623	
Q408	8-729-216-22	TRANSISTOR 2SA1162	
Q409	8-729-100-66	TRANSISTOR 2SC1623	
Q410	8-729-100-66	TRANSISTOR 2SC1623	
Q411	8-729-100-66	TRANSISTOR 2SC1623	
Q502	8-729-100-66	TRANSISTOR 2SC1623	
Q503	8-729-901-06	TRANSISTOR DTA144EK	
Q504	8-729-100-66	TRANSISTOR 2SC1623	
Q505	8-729-100-66	TRANSISTOR 2SC1623	
Q506	8-729-100-66	TRANSISTOR 2SC1623	
Q507	8-729-901-06	TRANSISTOR DTA144EK	
Q508	8-729-901-06	TRANSISTOR DTA144EK	
Q601	8-729-901-06	TRANSISTOR DTA144EK	
Q604	8-729-805-25	TRANSISTOR 2SB1121	
Q605	8-729-100-66	TRANSISTOR 2SC1623	
Q606	8-729-901-06	TRANSISTOR DTA144EK	
Q701	8-729-901-06	TRANSISTOR DTA144EK	
Q702	8-729-901-06	TRANSISTOR DTA144EK	
Q703	8-729-901-01	TRANSISTOR DTC144EK	
Q704	8-729-216-22	TRANSISTOR 2SA1162	
Q705	8-729-216-22	TRANSISTOR 2SA1162	
Q706	8-729-100-66	TRANSISTOR 2SC1623	

The components identified by mark ⚠ or dotted line with mark ⚠ are critical for safety.
Replace only with part number specified.

Les composants identifiés par une marque ⚠ sont critiques pour la sécurité.
Ne les remplacer que par une piéce portant le numéro spécifié.

Ref. No.	Part No.	Description				Remark
Q707	8-729-100-66	TRANSISTOR 2SC1623				
Q708	8-729-901-06	TRANSISTOR DTA144EK				
Q709	8-729-901-06	TRANSISTOR DTA144EK				
Q710	8-729-901-06	TRANSISTOR DTA144EK				
Q711	8-729-901-06	TRANSISTOR DTA144EK				
Q712	8-729-901-06	TRANSISTOR DTA144EK				
Q713	8-729-901-01	TRANSISTOR DTC144EK				
Q714	8-729-901-01	TRANSISTOR DTC144EK				
		〈 RESISTOR 〉				
R001	1-216-049-00	METAL CHIP	1K	5%	1/10W	
R002	1-216-057-00	METAL CHIP	2.2K	5%	1/10W	
R003	1-216-049-00	METAL CHIP	1K	5%	1/10W	
R005	1-216-101-00	METAL CHIP	150K	5%	1/10W	
R009	1-216-089-00	METAL CHIP	47K	5%	1/10W	
R010	1-216-049-00	METAL CHIP	1K	5%	1/10W	
R011	1-216-049-00	METAL CHIP	1K	5%	1/10W	
R012	1-216-049-00	METAL CHIP	1K	5%	1/10W	
R013	1-216-049-00	METAL CHIP	1K	5%	1/10W	
R014	1-216-049-00	METAL CHIP	1K	5%	1/10W	
R015	1-216-049-00	METAL CHIP	1K	5%	1/10W	
R016	1-216-089-00	METAL CHIP	47K	5%	1/10W	
R017	1-216-089-00	METAL CHIP	47K	5%	1/10W	
R018	1-216-691-11	METAL CHIP	47K	0.5%	1/10W	
R019	1-216-691-11	METAL CHIP	47K	0.5%	1/10W	
R020	1-216-687-11	METAL CHIP	33K	0.5%	1/10W	
R021	1-216-687-11	METAL CHIP	33K	0.5%	1/10W	
R022	1-216-687-11	METAL CHIP	33K	0.5%	1/10W	
R023	1-216-674-11	METAL CHIP	9.1K	0.5%	1/10W	
R024	1-216-089-00	METAL CHIP	47K	5%	1/10W	
R025	1-216-097-00	METAL CHIP	100K	5%	1/10W	
R026	1-216-073-00	METAL CHIP	10K	5%	1/10W	
R027	1-216-049-00	METAL CHIP	1K	5%	1/10W	
R028	1-216-039-00	METAL CHIP	390	5%	1/10W	
R029	1-216-049-00	METAL CHIP	1K	5%	1/10W	
R031	1-216-097-00	METAL CHIP	100K	5%	1/10W	
R032	1-216-097-00	METAL CHIP	100K	5%	1/10W	
R033	1-216-049-00	METAL CHIP	1K	5%	1/10W	
R034	1-216-089-00	METAL CHIP	47K	5%	1/10W	
R035	1-216-089-00	METAL CHIP	47K	5%	1/10W	
R036	1-216-073-00	METAL CHIP	10K	5%	1/10W	
R037	1-216-089-00	METAL CHIP	47K	5%	1/10W	

Ref. No.	Part No.	Description				Remark
R038	1-216-039-00	METAL CHIP	390	5%	1/10W	
R039	1-216-089-00	METAL CHIP	47K	5%	1/10W	
R040	1-216-089-00	METAL CHIP	47K	5%	1/10W	
R041	1-216-073-00	METAL CHIP	10K	5%	1/10W	
R043	1-216-089-00	METAL CHIP	47K	5%	1/10W	
R044	1-216-049-00	METAL CHIP	1K	5%	1/10W	
R045	1-216-089-00	METAL CHIP	47K	5%	1/10W	
R046	1-216-049-00	METAL CHIP	1K	5%	1/10W	
R047	1-216-049-00	METAL CHIP	1K	5%	1/10W	
R048	1-216-049-00	METAL CHIP	1K	5%	1/10W	
R049	1-216-049-00	METAL CHIP	1K	5%	1/10W	
R050	1-216-073-00	METAL CHIP	10K	5%	1/10W	
R051	1-216-073-00	METAL CHIP	10K	5%	1/10W	
R052	1-216-097-00	METAL CHIP	100K	5%	1/10W	
R053	1-216-097-00	METAL CHIP	100K	5%	1/10W	
R054	1-216-073-00	METAL CHIP	10K	5%	1/10W	
R055	1-216-073-00	METAL CHIP	10K	5%	1/10W	
R056	1-216-073-00	METAL CHIP	10K	5%	1/10W	
R057	1-216-073-00	METAL CHIP	10K	5%	1/10W	
R058	1-216-073-00	METAL CHIP	10K	5%	1/10W	
R059	1-216-073-00	METAL CHIP	10K	5%	1/10W	
R060	1-216-073-00	METAL CHIP	10K	5%	1/10W	
R061	1-216-073-00	METAL CHIP	10K	5%	1/10W	
R062	1-216-039-00	METAL CHIP	390	5%	1/10W	
R063	1-216-073-00	METAL CHIP	10K	5%	1/10W	
R064	1-216-073-00	METAL CHIP	10K	5%	1/10W	
R065	1-216-073-00	METAL CHIP	10K	5%	1/10W	
R066	1-216-073-00	METAL CHIP	10K	5%	1/10W	
R067	1-216-049-00	METAL CHIP	1K	5%	1/10W	
R068	1-216-057-00	METAL CHIP	2.2K	5%	1/10W	
R069	1-216-061-00	METAL CHIP	3.3K	5%	1/10W	
R070	1-216-073-00	METAL CHIP	10K	5%	1/10W	
R071	1-216-079-00	METAL CHIP	18K	5%	1/10W	
R072	1-216-043-00	METAL CHIP	560	5%	1/10W	
R073	1-216-085-00	METAL CHIP	33K	5%	1/10W	
R074	1-216-049-00	METAL CHIP	1K	5%	1/10W	
R075	1-216-039-00	METAL CHIP	390	5%	1/10W	
R076	1-216-080-00	METAL CHIP	20K	5%	1/10W	
R077	1-216-080-00	METAL CHIP	20K	5%	1/10W	
R078	1-216-080-00	METAL CHIP	20K	5%	1/10W	
R079	1-216-080-00	METAL CHIP	20K	5%	1/10W	
R080	1-216-080-00	METAL CHIP	20K	5%	1/10W	

SE-10

Ref. No.	Part No.	Description				Remark
R081	1-216-080-00	METAL CHIP	20K	5%	1/10W	
R082	1-216-080-00	METAL CHIP	20K	5%	1/10W	
R083	1-216-080-00	METAL CHIP	20K	5%	1/10W	
R084	1-216-080-00	METAL CHIP	20K	5%	1/10W	
R085	1-216-073-00	METAL CHIP	10K	5%	1/10W	
R086	1-216-073-00	METAL CHIP	10K	5%	1/10W	
R087	1-216-073-00	METAL CHIP	10K	5%	1/10W	
R088	1-216-073-00	METAL CHIP	10K	5%	1/10W	
R089	1-216-073-00	METAL CHIP	10K	5%	1/10W	
R090	1-216-073-00	METAL CHIP	10K	5%	1/10W	
R091	1-216-073-00	METAL CHIP	10K	5%	1/10W	
R092	1-216-089-00	METAL CHIP	47K	5%	1/10W	
R093	1-216-089-00	METAL CHIP	47K	5%	1/10W	
R094	1-216-683-11	METAL CHIP	22K	0.5%	1/10W	
R095	1-216-091-00	METAL CHIP	56K	5%	1/10W	
R096	1-216-077-00	METAL CHIP	15K	5%	1/10W	
R097	1-216-049-00	METAL CHIP	1K	5%	1/10W	
R098	1-216-073-00	METAL CHIP	10K	5%	1/10W	
R099	1-216-049-00	METAL CHIP	1K	5%	1/10W	
R101	1-216-079-00	METAL CHIP	18K	5%	1/10W	
R102	1-216-085-00	METAL CHIP	33K	5%	1/10W	
R103	1-216-049-00	METAL CHIP	1K	5%	1/10W	
R104	1-216-069-00	METAL CHIP	6.8K	5%	1/10W	
R105	1-216-083-00	METAL CHIP	27K	5%	1/10W	
R106	1-216-109-00	METAL CHIP	330K	5%	1/10W	
R107	1-216-073-00	METAL CHIP	10K	5%	1/10W	
R108	1-216-091-00	METAL CHIP	56K	5%	1/10W	
R109	1-216-061-00	METAL CHIP	3.3K	5%	1/10W	
R110	1-216-113-00	METAL CHIP	470K	5%	1/10W	
R111	1-216-113-00	METAL CHIP	470K	5%	1/10W	
R112	1-216-113-00	METAL CHIP	470K	5%	1/10W	
R113	1-216-113-00	METAL CHIP	470K	5%	1/10W	
R114	1-216-105-00	METAL CHIP	220K	5%	1/10W	
R115	1-216-105-00	METAL CHIP	220K	5%	1/10W	
R116	1-216-099-00	METAL CHIP	120K	5%	1/10W	
R117	1-216-117-00	METAL CHIP	680K	5%	1/10W	
R118	1-216-081-00	METAL CHIP	22K	5%	1/10W	
R119	1-216-117-00	METAL CHIP	680K	5%	1/10W	
R120	1-216-295-00	METAL CHIP	0	5%	1/10W	
R122	1-216-101-00	METAL CHIP	150K	5%	1/10W	
R123	1-216-085-00	METAL CHIP	33K	5%	1/10W	

Ref. No.	Part No.	Description				Remark
R124	1-216-085-00	METAL CHIP	33K	5%	1/10W	
R125	1-216-113-00	METAL CHIP	470K	5%	1/10W	
R126	1-216-113-00	METAL CHIP	470K	5%	1/10W	
R127	1-216-105-00	METAL CHIP	220K	5%	1/10W	
R128	1-216-093-00	METAL CHIP	68K	5%	1/10W	
R129	1-216-097-00	METAL CHIP	100K	5%	1/10W	
R130	1-216-097-00	METAL CHIP	100K	5%	1/10W	
R131	1-216-097-00	METAL CHIP	100K	5%	1/10W	
R132	1-216-121-00	METAL CHIP	1M	5%	1/10W	
R133	1-216-091-00	METAL CHIP	56K	5%	1/10W	
R135	1-216-073-00	METAL CHIP	10K	5%	1/10W	
R137	1-216-663-11	METAL CHIP	3.3K	0.5%	1/10W	
R138	1-216-667-11	METAL CHIP	4.7K	0.5%	1/10W	
R139	1-216-295-00	METAL CHIP	0	5%	1/10W	
R140	1-216-295-00	METAL CHIP	0	5%	1/10W	
R141	1-216-067-00	METAL CHIP	5.6K	5%	1/10W	
R142	1-216-073-00	METAL CHIP	10K	5%	1/10W	
R143	1-216-687-11	METAL CHIP	33K	0.5%	1/10W	
R148	1-216-089-00	METAL CHIP	47K	5%	1/10W	
R149	1-216-097-00	METAL CHIP	100K	5%	1/10W	
R150	1-216-073-00	METAL CHIP	10K	5%	1/10W	
R151	1-216-081-00	METAL CHIP	22K	5%	1/10W	
R152	1-216-082-00	METAL GLAZE	24K	5%	1/10W	
R153	1-216-073-00	METAL CHIP	10K	5%	1/10W	
R154	1-216-073-00	METAL CHIP	10K	5%	1/10W	
R155	1-216-049-00	METAL CHIP	1K	5%	1/10W	
R156	1-216-097-00	METAL CHIP	100K	5%	1/10W	
R157	1-216-097-00	METAL CHIP	100K	5%	1/10W	
R158	1-216-113-00	METAL CHIP	470K	5%	1/10W	
R159	1-216-073-00	METAL CHIP	10K	5%	1/10W	
R160	1-216-061-00	METAL CHIP	3.3K	5%	1/10W	
R161	1-216-103-00	METAL CHIP	180K	5%	1/10W	
R162	1-216-049-00	METAL CHIP	1K	5%	1/10W	
R163	1-216-065-00	METAL CHIP	4.7K	5%	1/10W	
R164	1-216-073-00	METAL CHIP	10K	5%	1/10W	
R165	1-216-073-00	METAL CHIP	10K	5%	1/10W	
R167	1-216-097-00	METAL CHIP	100K	5%	1/10W	
R168	1-216-091-00	METAL CHIP	56K	5%	1/10W	
R169	1-216-097-00	METAL CHIP	100K	5%	1/10W	
R170	1-216-089-00	METAL CHIP	47K	5%	1/10W	
R171	1-216-085-00	METAL CHIP	33K	5%	1/10W	
R172	1-216-089-00	METAL CHIP	47K	5%	1/10W	

Ref. No.	Part No.	Description				Remark
R173	1-216-073-00	METAL CHIP	10K	5%	1/10W	
R174	1-216-073-00	METAL CHIP	10K	5%	1/10W	
R175	1-216-105-00	METAL CHIP	220K	5%	1/10W	
R177	1-216-081-00	METAL CHIP	22K	5%	1/10W	
R180	1-216-081-00	METAL CHIP	22K	5%	1/10W	
R181	1-216-049-00	METAL CHIP	1K	5%	1/10W	
R204	1-216-061-00	METAL CHIP	3.3K	5%	1/10W	
R205	1-216-061-00	METAL CHIP	3.3K	5%	1/10W	
R206	1-216-061-00	METAL CHIP	3.3K	5%	1/10W	
R207	1-216-065-00	METAL CHIP	4.7K	5%	1/10W	
R208	1-216-079-00	METAL CHIP	18K	5%	1/10W	
R209	1-216-117-00	METAL CHIP	680K	5%	1/10W	
R210	1-216-091-00	METAL CHIP	56K	5%	1/10W	
R211	1-216-073-00	METAL CHIP	10K	5%	1/10W	
R215	1-216-097-00	METAL CHIP	100K	5%	1/10W	
R216	1-216-073-00	METAL CHIP	10K	5%	1/10W	
R217	1-216-089-00	METAL CHIP	47K	5%	1/10W	
R218	1-216-073-00	METAL CHIP	10K	5%	1/10W	
R219	1-216-081-00	METAL CHIP	22K	5%	1/10W	
R220	1-216-105-00	METAL CHIP	220K	5%	1/10W	
R221	1-216-111-00	METAL CHIP	390K	5%	1/10W	
R222	1-216-097-00	METAL CHIP	100K	5%	1/10W	
R223	1-216-073-00	METAL CHIP	10K	5%	1/10W	
R224	1-216-121-00	METAL CHIP	1M	5%	1/10W	
R225	1-216-089-00	METAL CHIP	47K	5%	1/10W	
R226	1-216-045-00	METAL CHIP	680	5%	1/10W	
R227	1-216-045-00	METAL CHIP	680	5%	1/10W	
R228	1-216-097-00	METAL CHIP	100K	5%	1/10W	
R234	1-216-089-00	METAL CHIP	47K	5%	1/10W	
R235	1-216-073-00	METAL CHIP	10K	5%	1/10W	
R236	1-216-049-00	METAL CHIP	1K	5%	1/10W	
R237	1-216-295-00	METAL CHIP	0	5%	1/10W	
R301	1-216-071-00	METAL CHIP	8.2K	5%	1/10W	
R302	1-216-089-00	METAL CHIP	47K	5%	1/10W	
R303	1-216-049-00	METAL CHIP	1K	5%	1/10W	
R304	1-216-081-00	METAL CHIP	22K	5%	1/10W	
R305	1-216-073-00	METAL CHIP	10K	5%	1/10W	
R306	1-216-081-00	METAL CHIP	22K	5%	1/10W	
R307	1-216-081-00	METAL CHIP	22K	5%	1/10W	
R308	1-216-065-00	METAL CHIP	4.7K	5%	1/10W	
R309	1-216-065-00	METAL CHIP	4.7K	5%	1/10W	
R310	1-216-295-00	METAL CHIP	0	5%	1/10W	

Ref. No.	Part No.	Description				Remark
R312	1-216-063-00	METAL CHIP	3.9K	5%	1/10W	
R313	1-216-295-00	METAL CHIP	0	5%	1/10W	
R314	1-216-049-00	METAL CHIP	1K	5%	1/10W	
R316	1-216-065-00	METAL CHIP	4.7K	5%	1/10W	
R317	1-216-065-00	METAL CHIP	4.7K	5%	1/10W	
R318	1-216-049-00	METAL CHIP	1K	5%	1/10W	
R319	1-216-089-00	METAL CHIP	47K	5%	1/10W	
R320	1-216-089-00	METAL CHIP	47K	5%	1/10W	
R321	1-216-105-00	METAL CHIP	220K	5%	1/10W	
R322	1-216-105-00	METAL CHIP	220K	5%	1/10W	
R323	1-216-049-00	METAL CHIP	1K	5%	1/10W	
R324	1-216-073-00	METAL CHIP	10K	5%	1/10W	
R325	1-216-073-00	METAL CHIP	10K	5%	1/10W	
R326	1-216-073-00	METAL CHIP	10K	5%	1/10W	
R327	1-216-081-00	METAL CHIP	22K	5%	1/10W	
R328	1-216-113-00	METAL CHIP	470K	5%	1/10W	
R329	1-216-073-00	METAL CHIP	10K	5%	1/10W	
R330	1-216-073-00	METAL CHIP	10K	5%	1/10W	
R331	1-216-073-00	METAL CHIP	10K	5%	1/10W	
R332	1-216-073-00	METAL CHIP	10K	5%	1/10W	
R401	1-216-043-00	METAL CHIP	560	5%	1/10W	
R402	1-216-077-00	METAL CHIP	15K	5%	1/10W	
R403	1-216-081-00	METAL CHIP	22K	5%	1/10W	
R404	1-216-089-00	METAL CHIP	47K	5%	1/10W	
R405	1-216-085-00	METAL CHIP	33K	5%	1/10W	
R406	1-216-073-00	METAL CHIP	10K	5%	1/10W	
R407	1-216-073-00	METAL CHIP	10K	5%	1/10W	
R408	1-216-089-00	METAL CHIP	47K	5%	1/10W	
R409	1-216-069-00	METAL CHIP	6.8K	5%	1/10W	
R410	1-216-085-00	METAL CHIP	33K	5%	1/10W	
R411	1-216-085-00	METAL CHIP	33K	5%	1/10W	
R412	1-216-079-00	METAL CHIP	18K	5%	1/10W	
R413	1-216-052-00	METAL CHIP	1.3K	5%	1/10W	
R414	1-216-045-00	METAL CHIP	680	5%	1/10W	
R415	1-216-081-00	METAL CHIP	22K	5%	1/10W	
R416	1-216-081-00	METAL CHIP	22K	5%	1/10W	
R417	1-216-047-00	METAL CHIP	820	5%	1/10W	
R418	1-216-051-00	METAL CHIP	1.2K	5%	1/10W	
R419	1-216-051-00	METAL CHIP	1.2K	5%	1/10W	
R420	1-216-029-00	METAL CHIP	150	5%	1/10W	
R421	1-216-081-00	METAL CHIP	22K	5%	1/10W	

SE-10

Ref. No.	Part No.	Description				Remark
R422	1-216-081-00	METAL CHIP	22K	5%	1/10W	
R502	1-216-045-00	METAL CHIP	680	5%	1/10W	
R503	1-216-077-00	METAL CHIP	15K	5%	1/10W	
R504	1-216-073-00	METAL CHIP	10K	5%	1/10W	
R505	1-216-033-00	METAL CHIP	220	5%	1/10W	
R506	1-216-035-00	METAL CHIP	270	5%	1/10W	
R507	1-216-041-00	METAL CHIP	470	5%	1/10W	
R508	1-216-076-00	METAL GLAZE	13K	5%	1/10W	
R509	1-216-057-00	METAL CHIP	2.2K	5%	1/10W	
R510	1-216-051-00	METAL CHIP	1.2K	5%	1/10W	
R511	1-216-049-00	METAL CHIP	1K	5%	1/10W	
R512	1-216-085-00	METAL CHIP	33K	5%	1/10W	
R513	1-216-081-00	METAL CHIP	22K	5%	1/10W	
R514	1-216-069-00	METAL CHIP	6.8K	5%	1/10W	
R515	1-216-041-00	METAL CHIP	470	5%	1/10W	
R551	1-216-073-00	METAL CHIP	10K	5%	1/10W	
R552	1-216-073-00	METAL CHIP	10K	5%	1/10W	
R553	1-216-748-11	METAL CHIP	39K	5%	1/10W	
R554	1-216-685-11	METAL CHIP	27K	0.5%	1/10W	
R555	1-216-073-00	METAL CHIP	10K	5%	1/10W	
R556	1-216-073-00	METAL CHIP	10K	5%	1/10W	
R557	1-216-109-00	METAL CHIP	330K	5%	1/10W	
R558	1-216-295-00	METAL CHIP	0	5%	1/10W	
R561	1-216-073-00	METAL CHIP	10K	5%	1/10W	
R562	1-216-090-00	METAL CHIP	51K	5%	1/10W	
R563	1-216-083-00	METAL CHIP	27K	5%	1/10W	
R564	1-216-073-00	METAL CHIP	10K	5%	1/10W	
R565	1-216-049-00	METAL CHIP	1K	5%	1/10W	
R566	1-216-041-00	METAL CHIP	470	5%	1/10W	
R567	1-216-049-00	METAL CHIP	1K	5%	1/10W	
R602	1-216-081-00	METAL CHIP	22K	5%	1/10W	
R604	1-216-049-00	METAL CHIP	1K	5%	1/10W	
R605	1-216-073-00	METAL CHIP	10K	5%	1/10W	
R606	1-216-069-00	METAL CHIP	6.8K	5%	1/10W	
R607	1-216-073-00	METAL CHIP	10K	5%	1/10W	
R608	1-216-069-00	METAL CHIP	6.8K	5%	1/10W	
R609	1-216-049-00	METAL CHIP	1K	5%	1/10W	
R610	1-216-061-00	METAL CHIP	3.3K	5%	1/10W	
R611	1-216-073-00	METAL CHIP	10K	5%	1/10W	
R612	1-216-073-00	METAL CHIP	10K	5%	1/10W	
R613	1-216-061-00	METAL CHIP	3.3K	5%	1/10W	
R614	1-216-049-00	METAL CHIP	1K	5%	1/10W	

Ref. No.	Part No.	Description				Remark
R615	1-216-049-00	METAL CHIP	1K	5%	1/10W	
R616	1-216-073-00	METAL CHIP	10K	5%	1/10W	
R617	1-216-121-00	METAL CHIP	1M	5%	1/10W	
R618	1-216-049-00	METAL CHIP	1K	5%	1/10W	
R619	1-216-049-00	METAL CHIP	1K	5%	1/10W	
R620	1-216-049-00	METAL CHIP	1K	5%	1/10W	
R621	1-216-049-00	METAL CHIP	1K	5%	1/10W	
R622	1-216-049-00	METAL CHIP	1K	5%	1/10W	
R623	1-216-049-00	METAL CHIP	1K	5%	1/10W	
R624	1-216-049-00	METAL CHIP	1K	5%	1/10W	
R625	1-216-049-00	METAL CHIP	1K	5%	1/10W	
R626	1-216-049-00	METAL CHIP	1K	5%	1/10W	
R627	1-216-049-00	METAL CHIP	1K	5%	1/10W	
R628	1-216-049-00	METAL CHIP	1K	5%	1/10W	
R629	1-216-049-00	METAL CHIP	1K	5%	1/10W	
R630	1-216-049-00	METAL CHIP	1K	5%	1/10W	
R632	1-216-049-00	METAL CHIP	1K	5%	1/10W	
R633	1-216-045-00	METAL CHIP	680	5%	1/10W	
R634	1-216-045-00	METAL CHIP	680	5%	1/10W	
R635	1-216-045-00	METAL CHIP	680	5%	1/10W	
R636	1-216-049-00	METAL CHIP	1K	5%	1/10W	
R637	1-216-073-00	METAL CHIP	10K	5%	1/10W	
R638	1-216-073-00	METAL CHIP	10K	5%	1/10W	
R639	1-216-073-00	METAL CHIP	10K	5%	1/10W	
R640	1-216-073-00	METAL CHIP	10K	5%	1/10W	
R641	1-216-073-00	METAL CHIP	10K	5%	1/10W	
R643	1-216-049-00	METAL CHIP	1K	5%	1/10W	
R644	1-216-049-00	METAL CHIP	1K	5%	1/10W	
R701	1-216-097-00	METAL CHIP	100K	5%	1/10W	
R702	1-216-057-00	METAL CHIP	2.2K	5%	1/10W	
R703	1-216-695-11	METAL CHIP	68K	0.5%	1/10W	
R704	1-216-697-11	METAL CHIP	82K	0.5%	1/10W	
R705	1-216-663-11	METAL CHIP	3.3K	0.5%	1/10W	
R706	1-216-697-11	METAL CHIP	82K	0.5%	1/10W	
R707	1-216-101-00	METAL CHIP	150K	5%	1/10W	
R708	1-216-685-11	METAL CHIP	27K	0.5%	1/10W	
R709	1-216-681-11	METAL CHIP	18K	0.5%	1/10W	
R710	1-216-681-11	METAL CHIP	18K	0.5%	1/10W	
R711	1-216-666-11	METAL CHIP	4.3K	0.5%	1/10W	
R712	1-216-693-11	METAL CHIP	56K	0.5%	1/10W	
R713	1-216-691-11	METAL CHIP	47K	0.5%	1/10W	
R714	1-216-663-11	METAL CHIP	3.3K	0.5%	1/10W	

Ref. No.	Part No.	Description	Remark
		⟨ VARIABLE RESISTOR ⟩	
RV101	1-230-875-21	RES, ADJ, METAL 220K	
RV102	1-230-875-21	RES, ADJ, METAL 220K	
RV103	1-230-871-11	RES, ADJ, METAL 22K	
RV104	1-230-871-11	RES, ADJ, METAL 22K	
RV105	1-230-870-11	RES, ADJ, METAL 10K	
RV106	1-230-870-11	RES, ADJ, METAL 10K	
RV201	1-230-873-11	RES, ADJ, METAL 47K	
RV203	1-230-869-11	RES, ADJ, METAL 4.7K	
RV204	1-230-869-11	RES, ADJ, METAL 4.7K	
RV301	1-230-868-11	RES, ADJ, METAL 2.2K	
RV302	1-230-868-11	RES, ADJ, METAL 2.2K	
RV303	1-230-869-11	RES, ADJ, METAL 4.7K	
RV304	1-230-873-11	RES, ADJ, METAL 47K	
		⟨ CRYSTAL ⟩	
X001	1-577-116-21	CRYSTAL (16MHz)	
X002	1-567-346-11	OSCILLATOR, CERAMIC (5MHz)	
X003	1-567-346-11	OSCILLATOR, CERAMIC (5MHz)	
X004	1-567-160-21	RESONATOR, CERAMIC (4.19MHz)	
X101	1-567-505-11	OSCILLATOR, CRYSTAL (3.58MHz)	
**********			
*	1-633-699-11	TC-20 BOARD	
		**********	
	1-809-338-11	INDICATOR, LED	
		⟨ CAPACITOR ⟩	
C701	1-135-162-21	TANTALUM CHIP 33uF 20% 6.3V	
C702	1-135-162-21	TANTALUM CHIP 33uF 20% 6.3V	
C703	1-135-162-21	TANTALUM CHIP 33uF 20% 6.3V	
C704	1-135-162-21	TANTALUM CHIP 33uF 20% 6.3V	
C705	1-135-162-21	TANTALUM CHIP 33uF 20% 6.3V	
C706	1-135-162-21	TANTALUM CHIP 33uF 20% 6.3V	
C707	1-135-162-21	TANTALUM CHIP 33uF 20% 6.3V	
C708	1-135-162-21	TANTALUM CHIP 33uF 20% 6.3V	
		⟨ TRANSISTOR ⟩	
Q701	8-729-140-88	TRANSISTOR FP1A3M	
Q702	8-729-140-88	TRANSISTOR FP1A3M	
Q703	8-729-140-88	TRANSISTOR FP1A3M	
Q704	8-729-140-88	TRANSISTOR FP1A3M	
Q705	8-729-140-88	TRANSISTOR FP1A3M	
Q706	8-729-140-88	TRANSISTOR FP1A3M	
Q707	8-729-140-88	TRANSISTOR FP1A3M	
Q708	8-729-140-88	TRANSISTOR FP1A3M	
Q709	8-729-900-53	TRANSISTOR DTC114EK	
Q710	8-729-900-53	TRANSISTOR DTC114EK	
Q711	8-729-900-53	TRANSISTOR DTC114EK	
Q712	8-729-900-53	TRANSISTOR DTC114EK	
Q713	8-729-900-53	TRANSISTOR DTC114EK	
Q714	8-729-900-53	TRANSISTOR DTC114EK	
Q715	8-729-900-53	TRANSISTOR DTC114EK	
		⟨ RESISTOR ⟩	
R701	1-216-013-00	METAL CHIP 33 5% 1/10W	
R702	1-216-013-00	METAL CHIP 33 5% 1/10W	
R703	1-216-013-00	METAL CHIP 33 5% 1/10W	
R704	1-216-013-00	METAL CHIP 33 5% 1/10W	
R705	1-216-013-00	METAL CHIP 33 5% 1/10W	
R706	1-216-013-00	METAL CHIP 33 5% 1/10W	
R707	1-216-013-00	METAL CHIP 33 5% 1/10W	
R708	1-216-013-00	METAL CHIP 33 5% 1/10W	
R709	1-216-029-00	METAL CHIP 150 5% 1/10W	
R710	1-216-029-00	METAL CHIP 150 5% 1/10W	
R711	1-216-029-00	METAL CHIP 150 5% 1/10W	
R712	1-216-029-00	METAL CHIP 150 5% 1/10W	
R713	1-216-029-00	METAL CHIP 150 5% 1/10W	
R714	1-216-029-00	METAL CHIP 150 5% 1/10W	
R715	1-216-029-00	METAL CHIP 150 5% 1/10W	
**********			
*	1-633-700-11	TR-40 BOARD	
		**********	
		⟨ CONNECTOR ⟩	
CN401	1-506-484-11	CONNECTOR 5P, MALE	
CN402	1-506-487-11	CONNECTOR 8P, MALE	
CN403	1-506-481-11	CONNECTOR 2P, MALE	

TR-40 TS-74 (L) TS-74 (R)

Ref. No.	Part No.	Description	Remark
		⟨ JACK ⟩	
J401	1-566-847-41	CONNECTOR, (S) TERMINAL 4P (S VIDEO OUT)	
J402	1-566-847-41	CONNECTOR, (S) TERMINAL 4P (S VIDEO IN)	
		⟨ VARIABLE RESISTOR ⟩	
RV401	1-230-694-11	RES, VAR, CARBON 250K	
		⟨ SWITCH ⟩	
S401	1-553-725-21	SWITCH, SLIDE (SYNC INT/EXT)	
S402	1-553-725-21	SWITCH, SLIDE (EDIT)	
**********			
*	A-7070-628-A	TS-74 (L) BOARD, COMPLETE	
		**********	
		⟨ TRANSISTOR ⟩	
Q715	8-729-700-08	TRANSISTOR NJL714E	
**********			
*	A-7070-627-A	TS-74 (R) BOARD, COMPLETE	
		**********	
		⟨ TRANSISTOR ⟩	
Q715	8-729-700-08	TRANSISTOR NJL714E	
**********			
		MISCELLANEOUS	
		**********	
C901	1-161-057-00	CERAMIC 0.033uF 10% 50V (ON M906)	
C902	1-161-057-00	CERAMIC 0.033uF 10% 50V (ON M904)	
M902	8-835-304-11	MOTOR, DC U-11B (REEL)	
M901	A-7048-201-A	DRUM ASSY (DGH-35-A-R) (DRUM)	
M903	8-835-364-01	MOTOR, DC BHF-2802B (CAPSTAN)	
M904	X-3711-936-1	MOTOR ASSY, FL (CASSETTE LOADING)	
M905	8-835-138-01	MOTOR, DC (DNR-5301B) (CONTROL)	
M906	A-7040-065-A	MOTOR ASSY, L (LOADING)	
M907	1-541-360-21	MOTOR, DC BLUSHLESS FAN	
PM901	⚠ 1-454-377-31	SOLENOID, PLUNGER	
S901	1-570-407-11	SWITCH, SLIDE (CASSETTE LOADING)	
S903	1-553-226-00	SWITCH, LEAF (CASSETTE LOCK)	
S904	1-572-298-21	SWITCH, PUSH (REC PROOF, MPHG, ME/MP)	
**********			
		ACCESSORY & PACKING MATERIAL	
		**********	
*	3-697-977-51	INDIVIDUAL CARTON	
*	3-697-978-01	CUSHION (UPPER)	
*	3-697-979-01	CUSHION (LOWER)	
*	3-704-350-01	SHEET (STANDARD), PROTECTION	
	3-753-324-21	MANUAL, INSTRUCTION (ENGLISH)	
	3-753-324-31	MANUAL, INSTRUCTION (FRENCH)	
*	3-795-581-21	SAFEGUARD (SONY), IMPORTANT	
**********			
		HARDWARE LIST	
		**********	
#1	7-621-255-45	SCREW +BVTT 2X6 (S)	
#2	7-685-646-79	SCREW +BVTP 3X8 TYPE2 IT-3	
#3	7-682-555-09	SCREW +P 3X30	
#4	7-627-850-18	SCREW, PRECISION +P 1.4X2.5	
#5	7-621-772-10	SCREW +B 2X4	
#6	7-621-255-65	SCREW +P 2X10	
#7	7-627-553-28	SCREW, PRECISION +P 2X2.5	
#8	7-621-255-25	SCREW +P 2X4	
#9	7-624-102-04	STOP RING 1.5, TYPE-E	
#10	7-624-105-04	STOP RING 2.3, TYPE-E	
#11	7-628-253-20	SCREW +PS 2X6	
#12	7-628-253-00	SCREW +PSW 2X4	
#13	7-627-553-48	SCREW, PRECISION +P 2X4	
#14	7-621-255-50	SCREW +P 2X8	
#15	7-624-106-04	STOP RING 3.0, TYPE-E	
#16	7-627-553-68	SCREW (±M2X6), SPECIAL	
#17	7-621-255-15	SCREW +PTT 2X3 (S)	
#18	7-621-255-20	SCREW +P 2X4	
#19	7-685-133-19	SCREW +P 2.6X6 TYPE2 NON-SLIT	
#20	7-671-154-01	STEEL, BALL	

The components identified by mark ⚠ or dotted line with mark ⚠ are critical for safety.
Replace only with part number specified.

Les composants identifiés par une marque ⚠ sont critiques pour la sécurité.
Ne les remplacer que par une piéce portant le numéro spécifié.

SECTION 7
MECHANICAL ADJUSTMENT

7-1. PERIODIC CHECK AND MAINTENACE

It is recommended that the following periodic check and maintenance schedule are employed in order to obtain maximum performance of the unit and longer tape life.

7-1-1. MAINTENANCE AFTER REPAIRS

Perform the following maintenance after repair regardless the operating hours of the unit.

(1) Cleaning of the Rotary Upper Drum

. Press the cleaning piece moistend with cleaning fluid lightly against the Rotary Upper Drum and turn slowly the Upper Drum counterclockwise with a hand.

Note: Never turn the Upper Drum by the electric power and never turn the Upper Drum clockwise with a hand. Never move the cleaning piece in the veritical direction of head tips in the cleaning. It tends to damage the video head tips. Please follow the instruction above for cleaning.

2) Cleaning of Tape Running System (fig.1)

. Put the cassette compartment into the EJECT completion mode and clean the tape running system (No.1 thru No.11 Guides, Capstan Shaft, Pinch Rolloer and IP Roller Guide) with cleaning piece moistend with the clearning the fluid.

(3) Cleaning of Drive System

. Clean the Drive system (reel table surface, belt and timing belt) with cleaning piece moistend with the cleaning fluid.

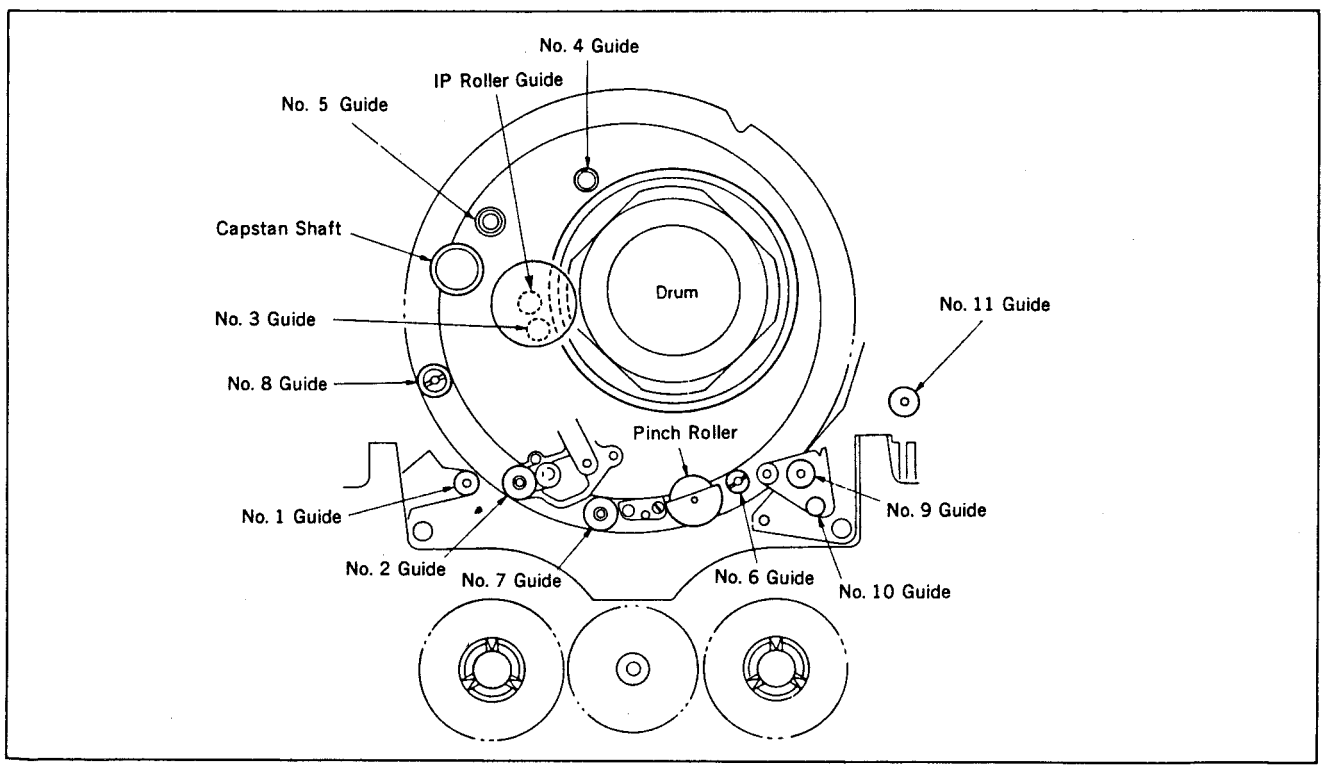

7-1-2. PERIODIC CHECK

Perform the maintenance and periodic checks described below in accordance with the operational hour of the unit.

○: Cleaning ◆: Replacement ◇: Checking ■: Oiling

Location			Hours of Use (H) : MENU No. (Drum rotation)										Reference
	Parts Name	Parts No.	500	1,000	1,500	2,000	2,500	3,000	3,500	4,000	4,500	5,000	Section
Tape Path	Tape Path surface	–	○	○	○	○	○	○	○	○	○	○	7-1-1
	Upper Drum Ass'y (DGR-35-R)	A-7049-188-A	○	◇	○	◇	○	◇	○	◇	○	◇	7-2-2
	Drum Ass'y (DGH-35A-R)	A-7048-201-A	○	◇	○	◇	○	◇	○	◇	○	◇	7-2-3
	Pinch Roller Arm Ass'y	X-3686-576-1	○	○	○	○	○	○	○	○	○	○	7-2-5
	(Note 4:) Capstan shaft bearing	8-835-364-01	–	■	–	■	–	■	–	■	–	■	——
Drive System	Threading motor belt	3-686-546-01	○	○	○	○	○	○	○	◆	○	○	7-2-7
	Blake plunger	1-454-377-31	–	–	–	○	–	–	–	○	–	–	7-2-20
	Threading motor	A-7040-065-A	–	◇	–	◇	–	◇	–	◇	–	◇	7-2-7
	Control motor	8-835-138-01	–	◇	–	◇	–	◇	–	◇	–	◇	7-2-21
	Reel motor	8-835-304-11	–	◇	–	◇	–	◇	–	◇	–	◇	7-2-8
	T Reel Table Ass'y	X-3711-998-1	○	○	○	○	○	○	○	○	○	○	7-2-14
	S Reel Table Ass'y	X-3713-427-1	○	○	○	○	○	○	○	○	○	○	7-2-13
	T•Main Brake Ass'y	X-3686-574-1	–	◇	–	◇	–	◇	–	◇	–	◇	——
	S•Main Brake Ass'y	X-3713-429-1	–	◇	–	◇	–	◇	–	◇	–	◇	——
	T•S Brake Ass'y	X-3711-987-2	–	◇	–	◇	–	◇	–	◇	–	◇	——
	REW Brake Ass'y	X-3711-993-1	–	◇	–	◇	–	◇	–	◇	–	◇	——
	Tension Regulator Band Ass'y	X-3686-531-1	–	◇	–	◇	–	◇	–	◇	–	◇	7-2-16
	Roller (Cassette-up Compartment)	3-713-466-01	–	–	–	–	–	○	–	–	–	–	——
Performance Check	Abnormal-noise	–	◇	◇	◇	◇	◇	◇	◇	◇	◇	◇	——
	FWD Back tension measurement	–	–	◇	–	◇	–	◇	–	◇	–	◇	7-3-5
	Brake torque measurement	–	–	◇	–	◇	–	◇	–	◇	–	◇	7-3-1 to 7-3-3
	FWD, RVS torque measurement	–	–	◇	–	◇	–	◇	–	◇	–	◇	7-3-4

Note 1: When overhauling the unit, refer to the items above for replacement of parts.
Note 2: The time of parts replacement will differ with operating environment
Note 3: Be sure to clean the tape path surface in repairing.
Note 4: Oiling to the Capstan Shaft Bearing.
Apply one-half drop of oil to the Capstan Shaft Bearing.
(Never apply oil to the tape path surface.)

7-1-3. SERVICING TOOLS

Ref. No.	Parts No.	Description	Application
J-1	Y-2031-001-1	Cleaning Fluid	Cleaning
J-2	7-741-900-53	Wiping Cloth	Cleaning
J-3	Commercially sold	Head Degausser	Head degauss
J-4	J-6080-840-A	Small Adjustment Mirror	Tape path adjustment
J-5	8-967-995-02	Alignment Tape, WR5-1NP	Tape path adjustment
	8-967-995-13	Alignment Tape, WR5-7NE	Video frequency response adjustment
	8-967-995-42	Alignment Tape, WR5-5NSP	Video adjustment
	8-967-995-43	Alignment Tape, WR5-8NSE	Serve, audio and video adjustment (SP)
	8-967-995-52	Alignment Tape, WR5-8NLE	Servo, audio and video adjustment (LP)
J-6	J-6080-827-A	Dial Tension Gauge	Measurement of torque
J-7	J-6080-831-A	Tension Measurement Reel	FWD Back tension adjustment
J-8	J-6080-832-A	Tension Measurement Reel	Brake torque check
J-9	J-6080-823-A	No. 10 Gear Phase Tool	Threading ring assembly replacemnt
J-10	J-6080-826-A	No. 6 Guide Lock Screwdriver	Tape path adjustment
J-11	———	Rotary Drum Tool (packed with the Rotary Upper Drum for repair)	Rotary upper drum replacement
J-12	J-6080-824-A	FWD, RVS Winding Torque Cassette	S•T reel table winding torque check
J-13	J-6080-825-A	Mode Selector	Mechanical check, adjustment and replacement
J-14	J-6080-891-A	Track Shift Tool	Tape path adjustment
J-15	J-6080-883-A	RE/SWP Connector	Tape path adjustment
J-16	J-6080-884-A	CTL Connector	Tape path adjustment
J-17	7-700-766-01	Hexagonal Screwdriver (0.89 mm)	Tape path adjustment

J-1	J-2 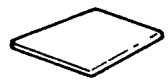	J-3 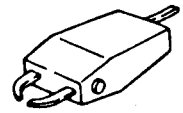	J-4 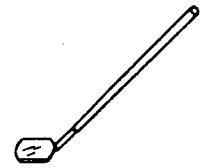
J-5 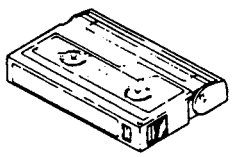	J-6 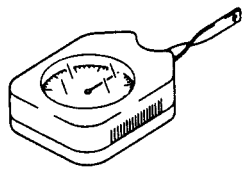	J-7 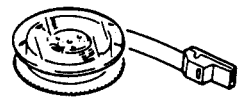	J-8 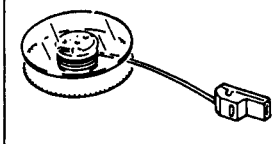
J-9 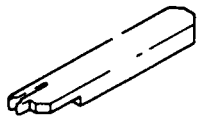	J-10	J-11 (Packed with the rotary upper drum for repair)	J-12 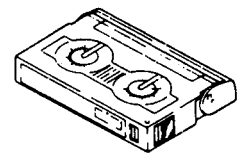
J-13 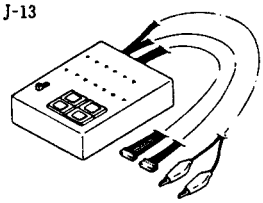	J-14 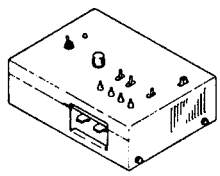	J-15 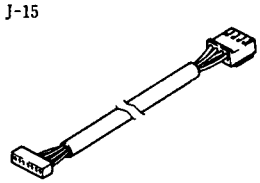	J-16 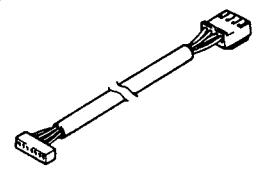
J-17 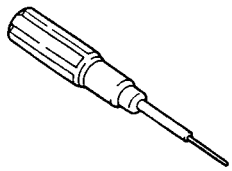			

7-1-4. HOW TO USE THE CLEANING TAPE

Cleaning Tape: V8-25CLH (separately available)

. Never use the cleaning tape, V8-25CLN.

(1) When the rotary heads clog and head cleaning descrived Section 3-1 can not clean the heads, use the cleaning tape.
If use the cleaning tape except for the above, it will shorten the life of the heads.
(2) The one time cleaning is within fifteen seconds and never reuse the cleaning tape after rewinding.

7-1-5. OTHERS

(1) Sony oil
. Be sure to use the Sony oil as the lubrication oil. (If other oil is useed, various troubles due to different viscosity tends to be caused.)
Sony oil: Part No. 7-661-018-18
. Use the Sony oil in which dust or other foreign material have not mixed for lubricating the bearing. (If foreign material is in the oil, wear or burning of the bearing tends to be caused.)
. One drop of oil means the amount which sticks to a 2 mm diameter rod, as shown in the figure.

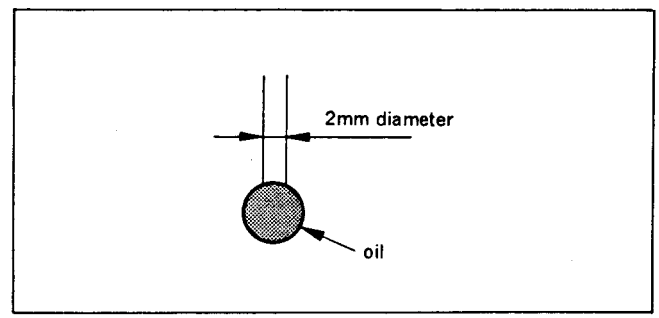

(2) Sony grease
. Be sure to use the Sony grease as the lubrication grease.
Sony grease: Part No. 7-662-001-62
(SGL-501)
(3) MOLYTONE GREASE
. Be sure to use the MOLYTONE GREASE as the lubrication grease.
MOLYTONE GREASE: Part No. 7-662-001-41
(No. 320)

7-2. REPLACEMENT OF MAJOR PARTS

PREPARATION FOR REPLACEMENT OF PARTS

Replacement of some parts use the *Mode Selector. The mode (▭ marked mode) in the replacement procudure is set by pressing the button on the Mode Selector.

*It is a kind of tool.
Part No. : J-6080-825-A

. Operation of Mode selector

1. Location of parts and controls (fig. 1)
2. Connection (fig. 2)

(1) Remove the Front Panel, Top Plate and Bottom Plate referring to Section 2-1.

(2) Remove the Mecha Deck Block from the unit referring to Section 2-5.

(3) Remove the MB-19, MD-23, HK-4 and SE-10 Boards from the unit referring to Sections 2-8, 2-9 and 2-10.

(4) Disconnect the connectors (6P) on the MS-4 and LS-9 Boards.

(5) Connect the 6P connector (six harness, white) for the M-switch of the Mode Selector to the MS-4 Board.

(6) Connect the 6P connector (four harness, black) for the L-switch of the Mode Selector to the LS-9 Board.

(7) Remove the cover of the Threading Motor.

(8) Connect the red clip of the Threading Motor driver lead to the red terminal of the Threading Motor and the black clip to the brown terminal.

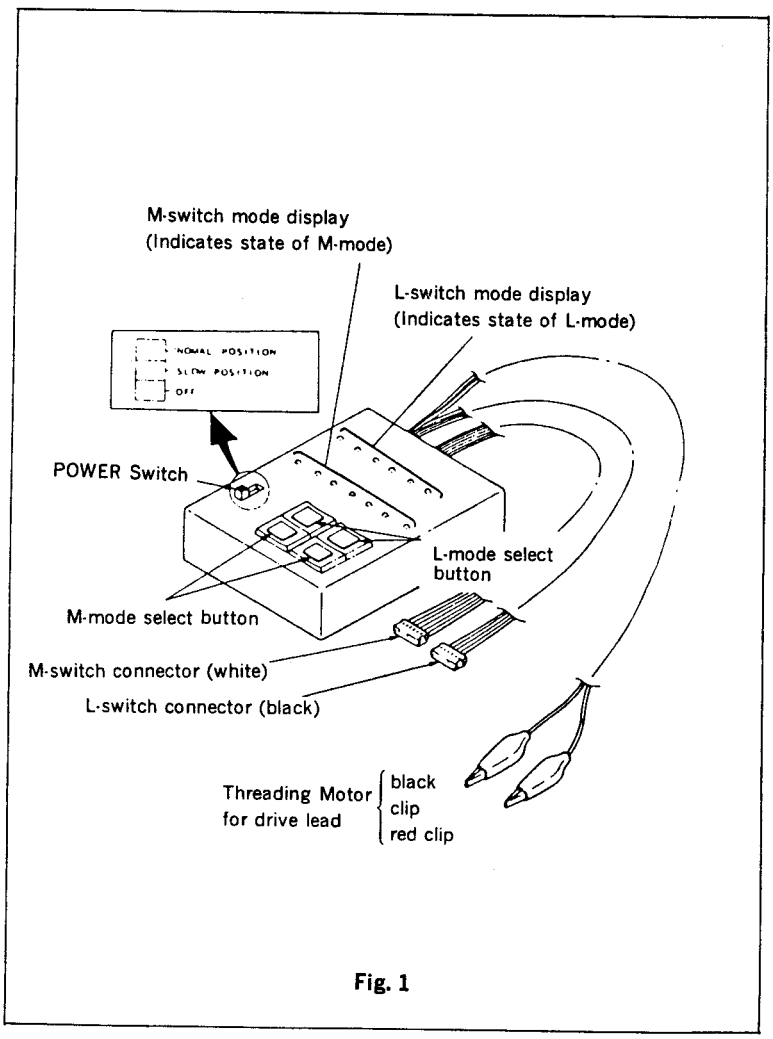

Fig. 1

3. Note

(1) When operating L-switch, be sure to set the mode of M-switch to LOADING/ UNLOADING mode.

(2) When operating M-switch, be sure to set the mode of L-switch to LOADING TOP or LOADING END mode.

4. Operation

When L-mode or M-mode does not set in each mode during mode selection, the BLANK position lights up.

(1) L-mode

- When the right side L-mode select button is pressed continuously, the mode changes from LOADING TOP to LOADING END in order from left.
- When the mode changes from LOADING END to LOADING TOP in order, press the left side L-mode select button cotinuously.
- When the power switch is set to the SLOW position, the L-mode operates more slowly than the NORMAL position.

(2) M-mode

- When performing EJECT, set the mode of L-switch to LOADING TOP.
- When performing from FF/REW to RVS or from RVS to FF/REW, set the mode of L-switch to LOADING END.
- When the right side M-mode select button is pressed continuously, the mode changes from EJECT to RVS in order from left.
- When the mode changes from RVS to EJECT, press the left side M-mode select button continuously.

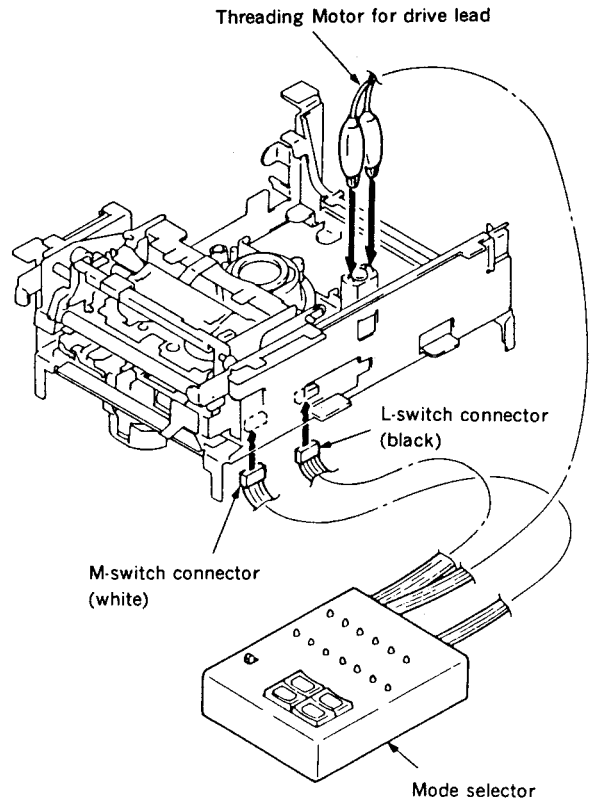

Fig. 2

7-2-1. REPLACEMENT OF THE FLY WHEEL

Removal:

(1) Open the MB-19 Board referring to Section 2-8.

(2) Remove the Fly Wheel while picking the claws.

Installation:

(1) Replace the Fly Wheel with a new one. Insert the Fly Wheel in the IP Rollar Guide from the big hole side until click sound can be heard.

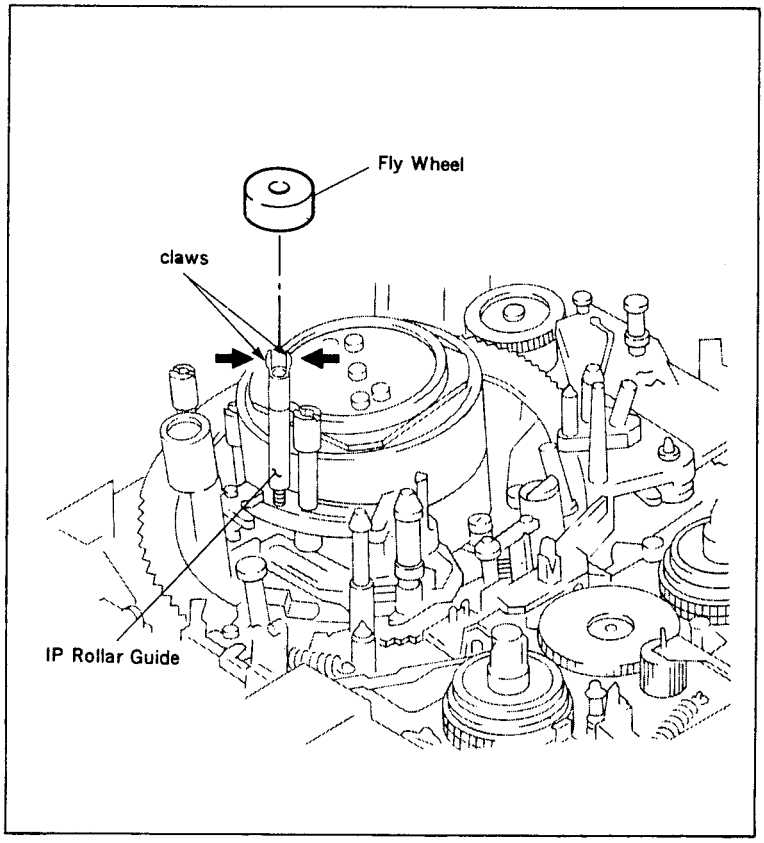

7-2-2. REPLACEMENT OF THE ROTARY UPPER DRUM

. The video heads can not be replaced as a single parts. Replace the whole Rotary Upper Drum Assembly.
. There is a relay PC Board (DH-6 Board) for the video and audio signals in the Rotary Upper Drum. It is not necessary to replace the DH-6 Board, if it is broken, replace the whole the Rotary Upper Drum Assembly.

Tools: Rotary Drum Tool (Ref No. J-11)
(It is packed together with the Repair Rotary Upper Drum.)
L-shaped wrench
(across flat has 1.5 mm)

Removal:

(1) Open the MB-19 Board referring to Section 2-8.
(2) Remove the Fly Wheel reffering to Section 7-2-1.
(3) Remove the two screws (M2 X 2.7) and remove the Dynamic Damper.
(4) Unsolder the ten terminals at A positions. Check that the terminals which are projected out from the PC Board move freely with a pair of tweezers, etc. (fig. 1)
(5) Remove the two screws (M2 X 5).
(6) Install the tool A to the two screw holes of installing the Dynamic Damper with the two accessory supplied screws. Thread the accessory supplied hexagon screw into the center hole of the tool A, and remove the Rotary Upper Drum. (fig. 2)

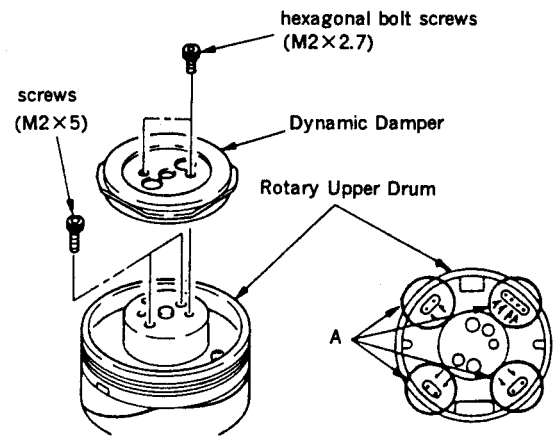

Fig. 1

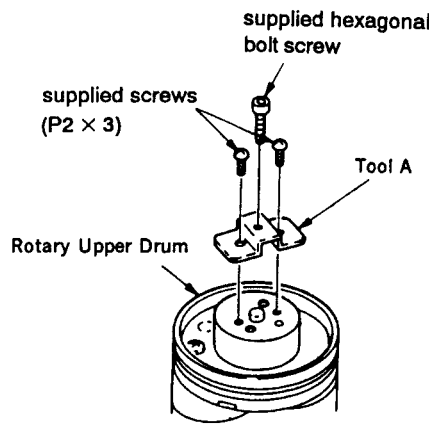

Fig. 2

Installation:

(1) Clean the flange surface of the Lower Drum and the contact point of the new Rotary Upper Drum with a cleaning piece. Check that no dust or flaw are left.

(2) While adjusting the positional relationship of the Rotary Upper Drum and positioning hole with the tool B, insert the Rotary Upper Drum lightly. At this time, Check that the terminals project out from the PC Board of the Rotary Upper Drum. When the terminals are caught, correct them with a pair of tweezers, etc.. Remove the tool B and lightly push the Rotary Upper Drum by hand. If the Rotary Upper Drum does not down to the botom, thread the two fixing screws to the Rotary Upper Drum alternately, but do not tighten them. Insert the tool B in the positioning hole and check that the tool B can be inserted smoothly again. If the tool B can not be inserted, loosen the two screws (M 2 X 5) and adjust the position of the Rotary Upper Drum by precision screwdriver. (fig. 3 and 4)

(3) Tighten the two screws (M2 X 5).

(4) Assemble the parts with Removal Steps (1) to (4) in reverse order.

Note: . Do not tighten all the screws too strongly.

. Be carefull not to flow solder below the PC Board.

After replacement, perform the Tape Path Adjustment referring to Section 7-4.

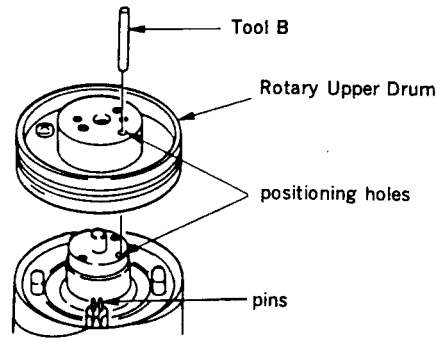

Fig. 3

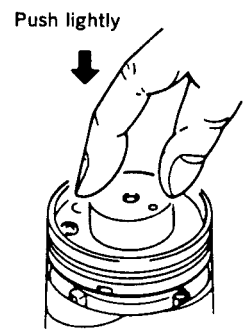

Fig. 4

7-2-3. REPLACEMENT OF THE DRUM ASSEMBLY

Removal:

(1) Open the MB-19 Board referring to Section 2-8.

(2) Remove the Cassette-up Compartment Assembly referring to Section 2-13.

(3) Remove the Fly Wheel referring to Section 7-2-1.

(4) Open the HK-4 and SE-10 Boards referring to Sections 2-9 and 2-10.

(5) Remove the two fixing screws and remove the Flexible Cover. (fig. 1)

(6) Disconnect the connectors (CN805, 806) on the MD-23 Board and disconnect the connector (CN001) on the FR-40 Board.

(7) Remove the fixing screw and remove the Shaft Ground Terminal.

(8) Remove the two fixing screws and remove the Drum Assembly. (fig. 2)

Note: At this time, be careful that the Drum Assembly does not touch the No. 3 Guide and the IP Roller Guide, etc..

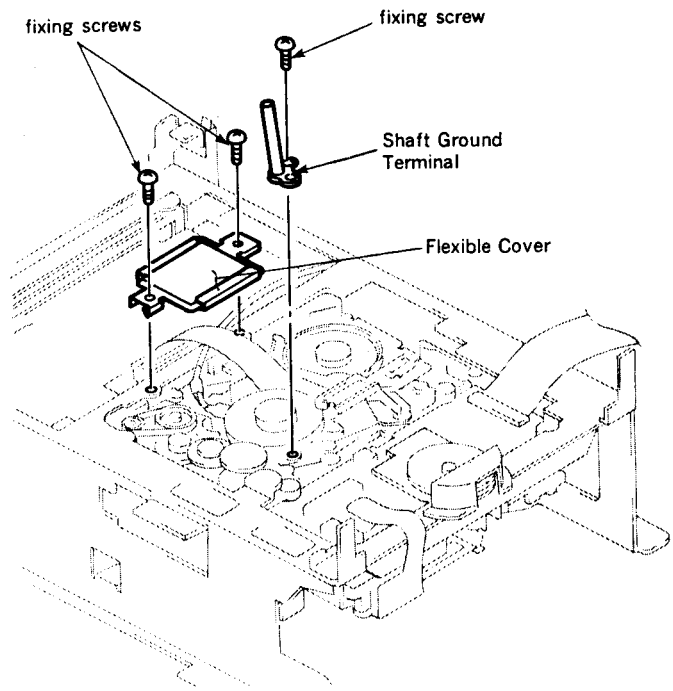

Fig. 1

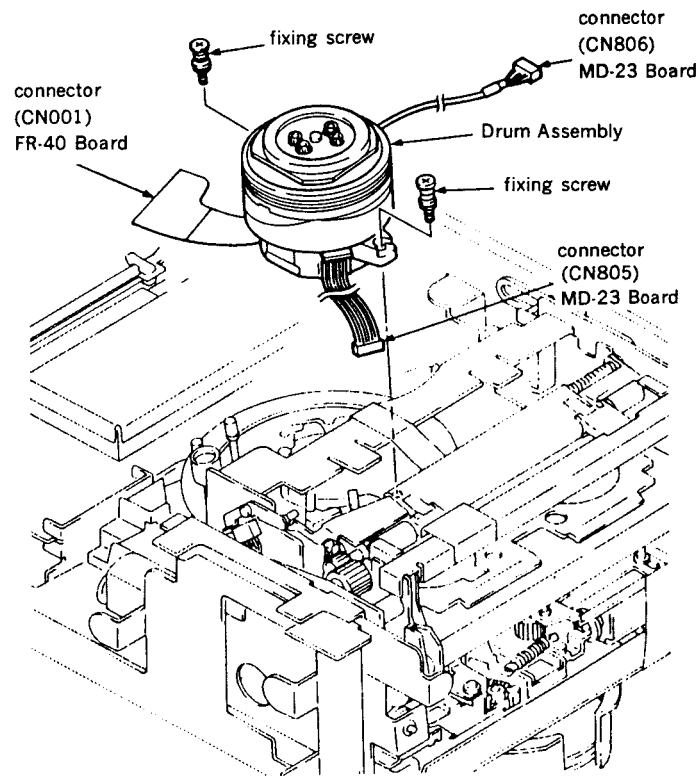

Fig. 2

Installation:

(1) Clean the flange surface of the new Drum Assembly and the contact point of the mechanical chassis with a cleaning piece.

(2) Set the Drum Assembly to the two projections of the Mecha chassis and tighten the two fixing screws.

Note: At this time, be careful that the screwdriver does not touch the head chips. (fig. 3)

(3) Peel off the tape from the Rotor and FG Stator of the Drum Assembly.

(4) Clean the shaft of the Drum Assembly with a cleaning piece.

(5) Clean the Shaft Ground Terminal which contact to the Drum Shaft with a cleaning piece and set the Shaft Ground Terminal to the projection of mechanical chassis and tighten the fixing screw.

(6) Assemble the parts with Removal Steps (1) to (6) in reverse order.

After replacement, perform the Tape Path Adjustment referring to Section 7-4.

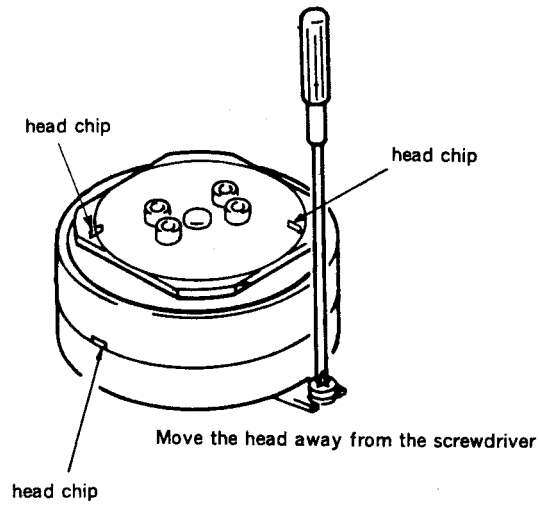

Fig. 3

7-2-4. REPLACEMENT OF THE THREADING RING ASSEMBLY

Tools: Mode Selector (Ref. No. J-13)
No. 10 Gear Phase Tool
(Ref. No. J-9)
Sony Oil

Removal:

(1) Remove the Cassette-up Compartment Assembly referring to Section 2-13.

(2) Press the L-mode select button of the Mode Selector and move the Guide Base Assembly and the No. 2 Guide Assembly until just before it is locked. (Do not move the Threading Ring Assembly.)

(3) Remove the stopper washer and remove the No. 10 Gear Assembly.

(4) Remove the fixing screw and remove the Roller Top Plate and Ring Roller.

(5) Remove the two fixing screws and remove the Ring Stopper and Ring Roller.

(6) Remove the Threading Ring Assembly in the direction of the arrow.

Note: When removing the Threading Ring Assembly, be careful that the Threading Ring Assembly does not touch the Drum and Capstan Shaft.

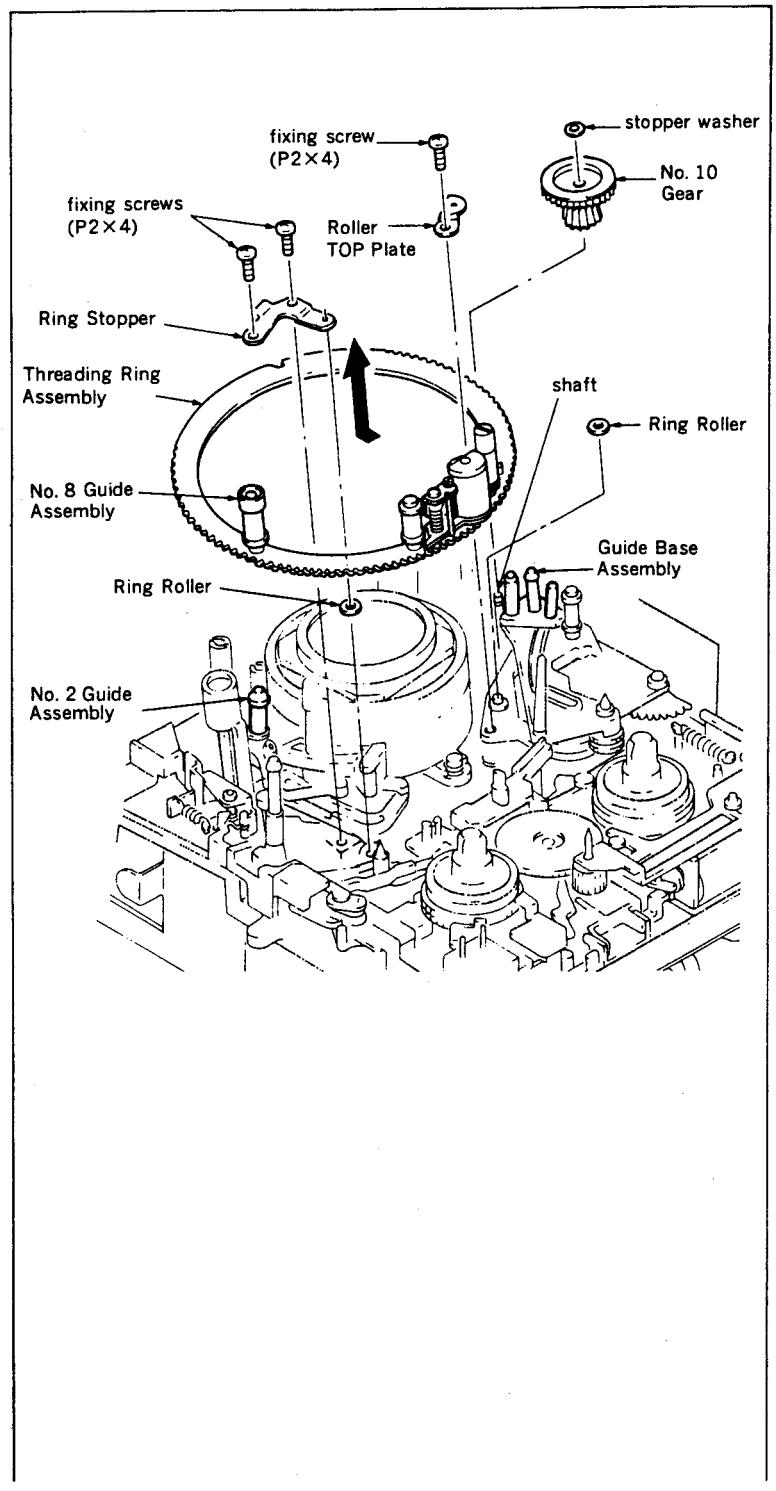

Installation:

(1) Replace the Threading Ring Assembly with a new one.

(2) Install the Threading Ring Assembly so that it puts into the unthreading mode. The Pinch Roller Arm Assembly is the Reel Table side. (Check that each assembly is put into the Step (2) at removal procedure.)

(3) Install the Ring Roller and Ring Stopper and tighten them with two fixing screws. (Check that the No. 8 Guide Assembly is in front of Ring Stopper.)

(4) Install the Ring Roller and Roller Top Plate and tighten them with the screw. (Check that the Threading Ring Assembly matches the three Ring Rollers.)

(5) Apply a half drop of oil on the shaft.

(6) Check that the pin of the Drive Changer Assembly is into the notch of the L-switch Assembly. Insert the No. 10 Gear Phase Tool (Ref. No. J-9) into the notch of the L-SW Assembly.

(7) While pushing the No. 8 Guide Assembly against the Ring Stopper, install the No.10 Gear Assembly with a stopper washer.

(8) Pull out the No. 10 Gear Phase Tool.

(9) Press the L-mode select button of the Mode Selector and set to the LOADING TOP mode.

(10) Install the Cassette-up Compartment Assembly referring to Section 2-13.

After replacement, perform the Tape Path Adjustment referring to Section 7-4.

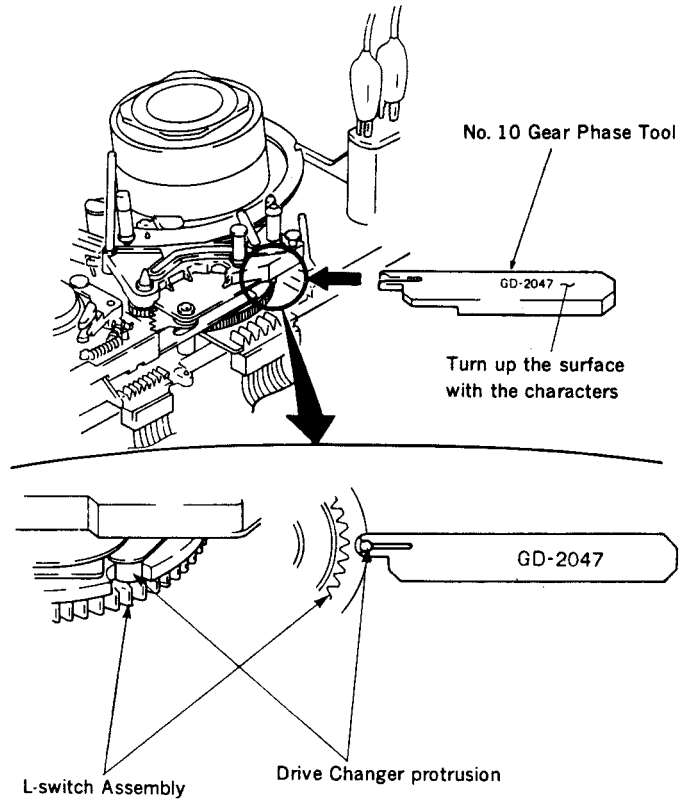

7-2-5. REPLACEMENT OF THE PINCH ROLLER ARM ASSEMBLY

Removal:

(1) Open the MB-19 Board referring to Section 2-8.
(2) Remove the Cassette-up Compartment Assembly referring to Section 2-13.
(3) Remove the stopper washer. (fig. 1)
(4) Hook the spring which is hooked to the No. 7 Guide Assembly to the groove of the Pinch Roller Arm (fig. 2)
(5) Turn the Pinch Roller Arm Assembly in the direction of the arrow. (fig. 3)
(6) Remove the Pinch Roller Arm Assembly in the direction of the arrow. (fig. 4)
(7) Remove the spring. (fig. 5)

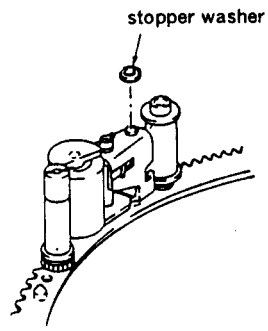

Fig. 1

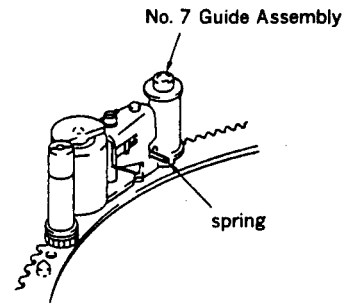

Fig. 2

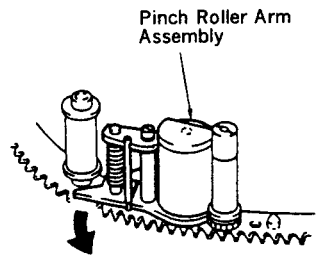

Fig. 3

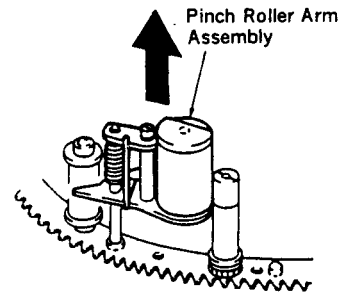

Fig. 4

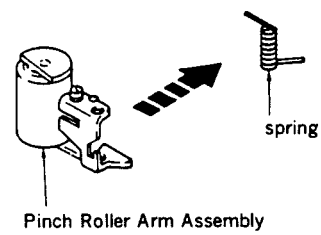

Fig. 5

Installation:

(1) Replace the Pinch Roller Arm Assembly with a new one.

(2) Install the spring and hook the ends of the spring to the Pinch Roller Arm Assembly. (fig. 1)

(3) Insert the end of the clip or another thin rod into the hole of the Pinch Roller Arm Assembly. (fig. 2 and 3)

(4) Put the end of the clip to the shaft of the Threading Ring Assembly and install the Pinch Roller Assembly. (fig. 4 and 5)

(5) Hook the end of the spring to the No. 7 Guide Assembly.
At this time, check that the another end of the spring is hooked to "A". (fig. 6)

(6) Assemble the parts with Removal Steps (1) to (3) in reverse order.

After replacement, perform the Tape Path Check referring to Section 7-4-6.

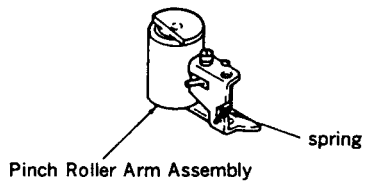

Fig. 1

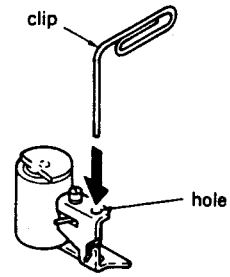

Fig. 2

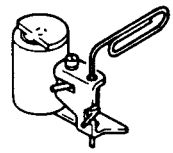

Fig. 3

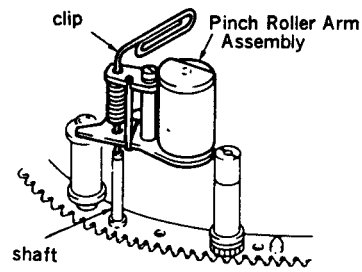

Fig. 4

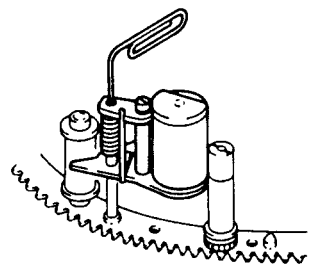

Fig. 5

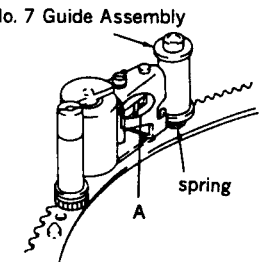

Fig. 6

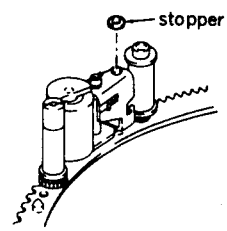

Fig. 7

7-2-6. REPLACEMENT OF THE CAPSTAN MOTOR

Removal:

(1) Open the MB-19 Board referring to Section 2-8.
(2) Remove the Cassette-up Compartment Assembly referring to Section 2-13.
(3) Remove the Threading Ring Assembly referring to Section 7-2-4.
(4) Open the HK-4 and SE-10 Boards referring to Sections 2-9 and 2-10.
(5) Remove the two fixing screws and remove the Flexible Cover.
(6) Remove the harness of the Capstan Motor from the Wire Holder.
(7) Remove the fixing screw and remove the Wire Holder.
(8) Remove the fixing screw and remove the Gear Base.
(9) Disconnect the flexible connector of the Capstan Motor.
(10) Remove the two fixing screws and remove the Capstan Motor in the direction of the arrow.

Installation:

(1) Replace the Capstan Motor with a new one and assemble the parts with Removal Steps (1) to (10) in reverse order.

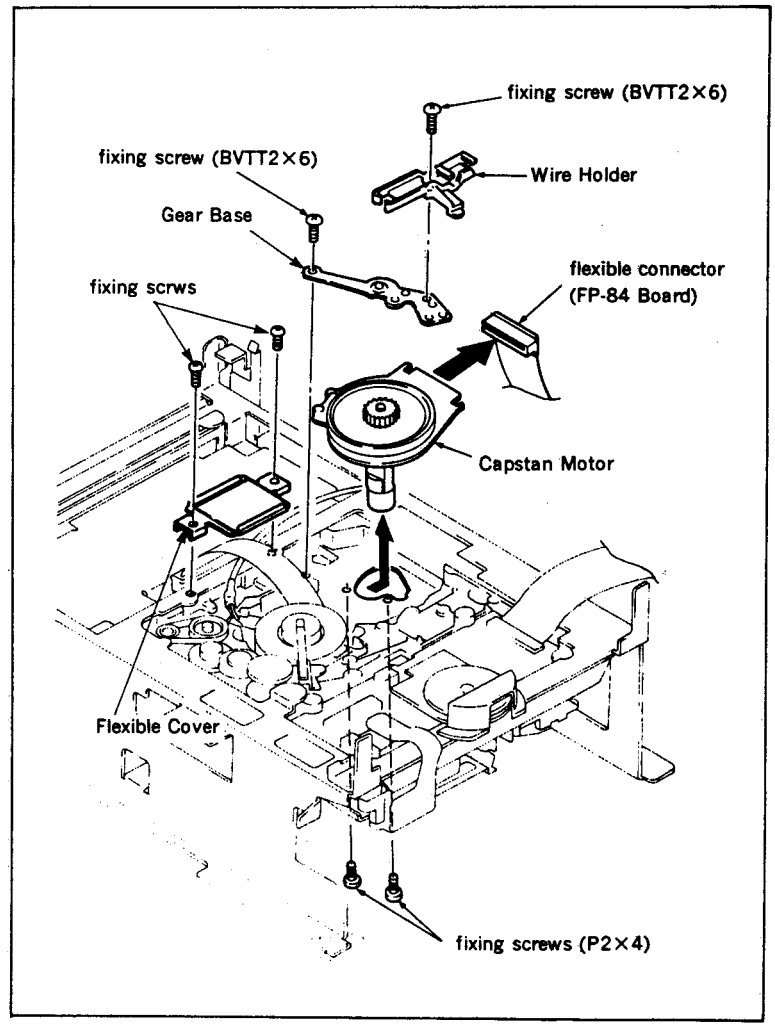

7-2-7. REPLACEMENT OF THE THREADING MOTOR ASSEMBLY

Removal:

(1) Open the MB-19 Board referring to Section 2-8.

(2) Open the HK-4 and SE-10 Boards referring to Section 2-9 and 2-10.

(3) Remove the L Motor Belt.

(4) Disconnect the connector (CN302) on the RS-31 Board.

(5) Remove the two fixing screws and remove the Threading Motor Assembly.

Installation:

(1) Replace the Threading Motor Assembly with a new one and assemble the parts with Removal Steps (1) to (5) in reverse order.

Note: Before installing the L Motor Belt, clean it with a cleaning piece and be sure to install the belt in the groove of pulley.

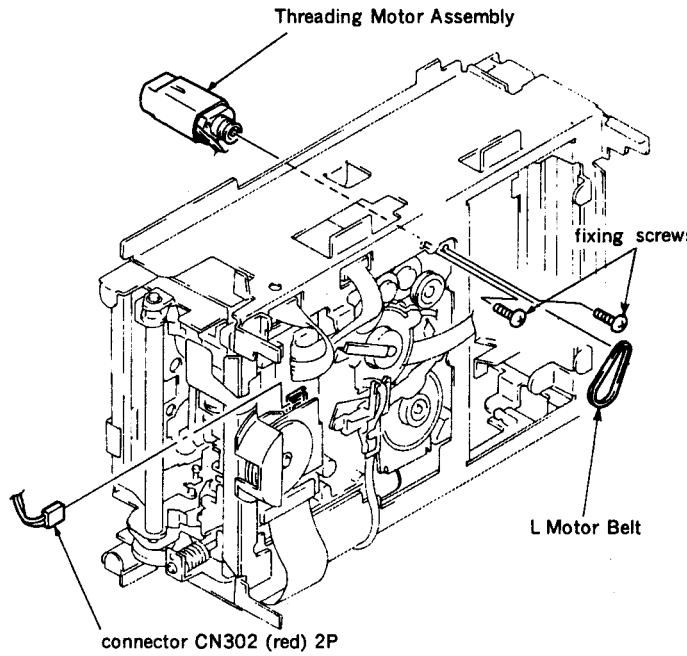

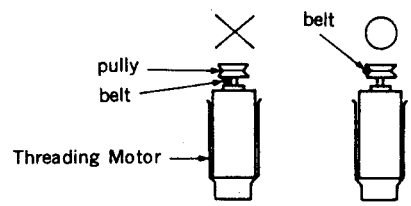

7-2-8. REPLACEMENT OF THE REEL MOTOR

Removal:

(1) Open the HK-4 and SE-10 Boards referring to Section 2-9 and 2-10.

(2) Remove the FP-122 Flexible Board from the PC Board of the Reel Motor.

(3) Remove the FP-206 Flexible Board from the RS-31 Board.

(4) Remove the two fixing screws of the Motor Bracket.

(5) Insert a flatblade screwdriver into A, release the projection B and remove the Motor Bracket.

Note: If the Motor Bracket is removed by hand directly, it tends to damage the Motor Bracket.

(6) Remove the two fixing screws and remove the Motor Cover from the Motor Bracket.

(7) Remove the two fixing screws and remove the Reel Motor in the direction of the arrow.

Installation:

(1) Replace the Reel Motor with a new one. Assemble the parts with Removal Steps (1) to (7) in reverse order.

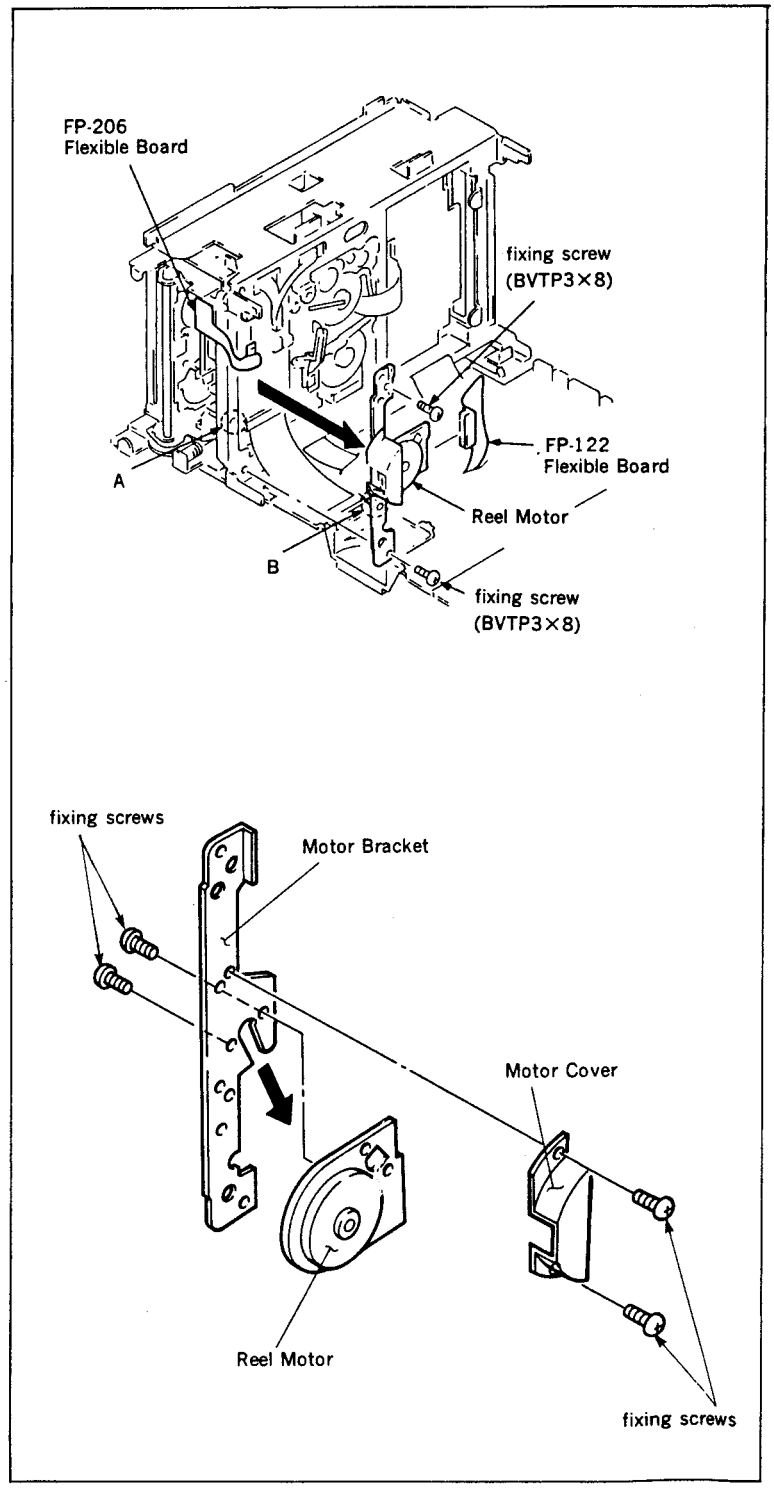

7-2-9. REPLACEMENT OF THE No. 3 and No. 4 GUIDES

Removal:

(1) Open the MB-19 Board referring to Section 2-8.

(2) When replacing the No. 3 Guide, remove the Fly Wheel referring to Section 7-2-1.

(3) Turn the Rotary Upper Drum counterclockwise and keep heads away from the No. 3 Guide or No. 4 Guide.

(4) Remove the Guide Nut and remove the Guide Flange, No. 3 Guide (or No. 4 Guide) and spring.

Installation:

(1) Replace the No. 3 Guide (or No. 4 Guide) with a new one.

(2) Assemble the parts with Removal Steps (1) to (4) in reverse order.

After replacement, adjust the height of the No. 3 and No. 4 Guides to meet the tape path condition of Section 7-4-6-3 by turning the Guide Nut.

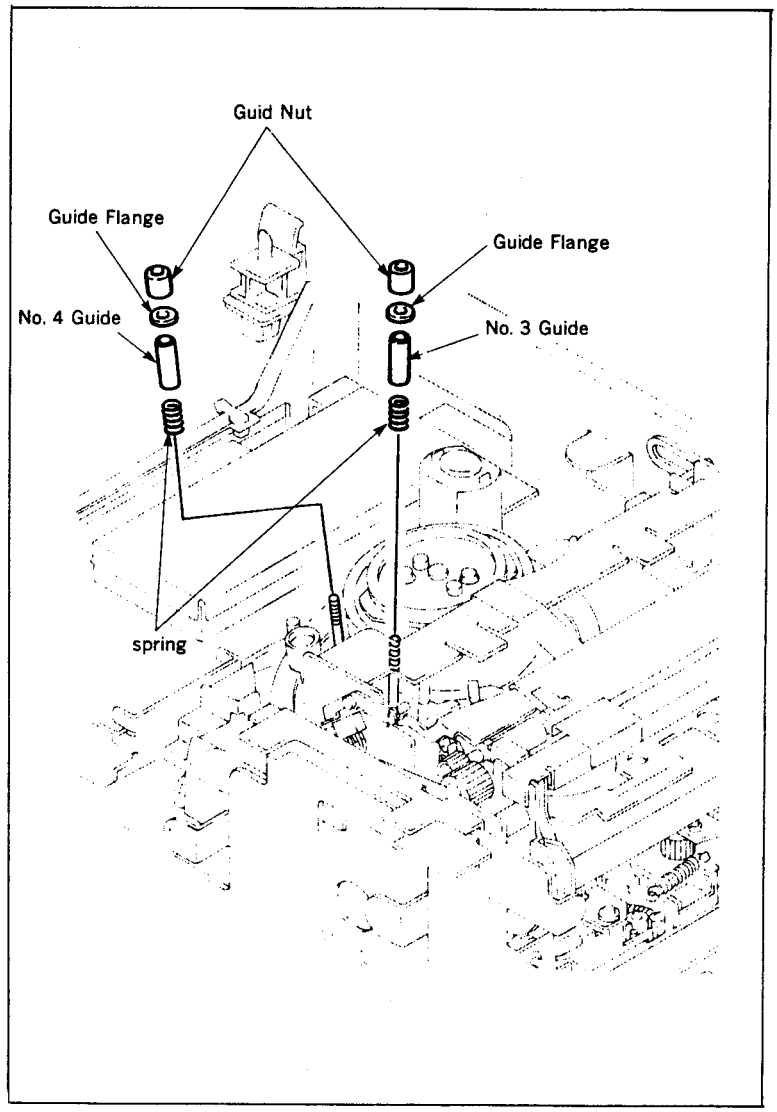

7-2-10. REPLACEMENT OF THE ENTRANCE GUIDE (P) ASSEMBLY (No. 2 GUIDE ASSEMBLY)

Removal:

(1) Open the MB-19 Board referring to Section 2-8.

(2) Remove the Cassette-up Compartment Assembly referring to Section 2-13.

(3) Remove the Fly Wheel referring to Section 7-2-1.

(4) Turn the Rotary Upper Drum counterclockwise and keep heads away from the Entrance Guide (P) Assembly.

(5) Remove the Guide Nut and remove the Guide Flange, No. 3 Guide and spring.

(6) Remove the two fixing screws and remove the Entrance Guide (P) Assembly.

Installation:

(1) Check that the mechanical block is put into the LOADING TOP mode.

(2) Replace the Entrance Guide (P) Assembly with a new one.

(3) Engage the Entrance Guide (P) Assembly and L Slider Assembly so that their flat portions A and B are matched, and tighten it with two fixing screws.

(4) Assemble the parts with Removal Steps (3) and (5) in reverse order.

(5) Perform the FWD Back Tension Adjustment referring to Section 7-3-5.

(6) Assemble the parts with Removal Steps (1) and (2) in reverse order.

After replacement, perform the Tape Path Adjustment referring to Section 7-4.

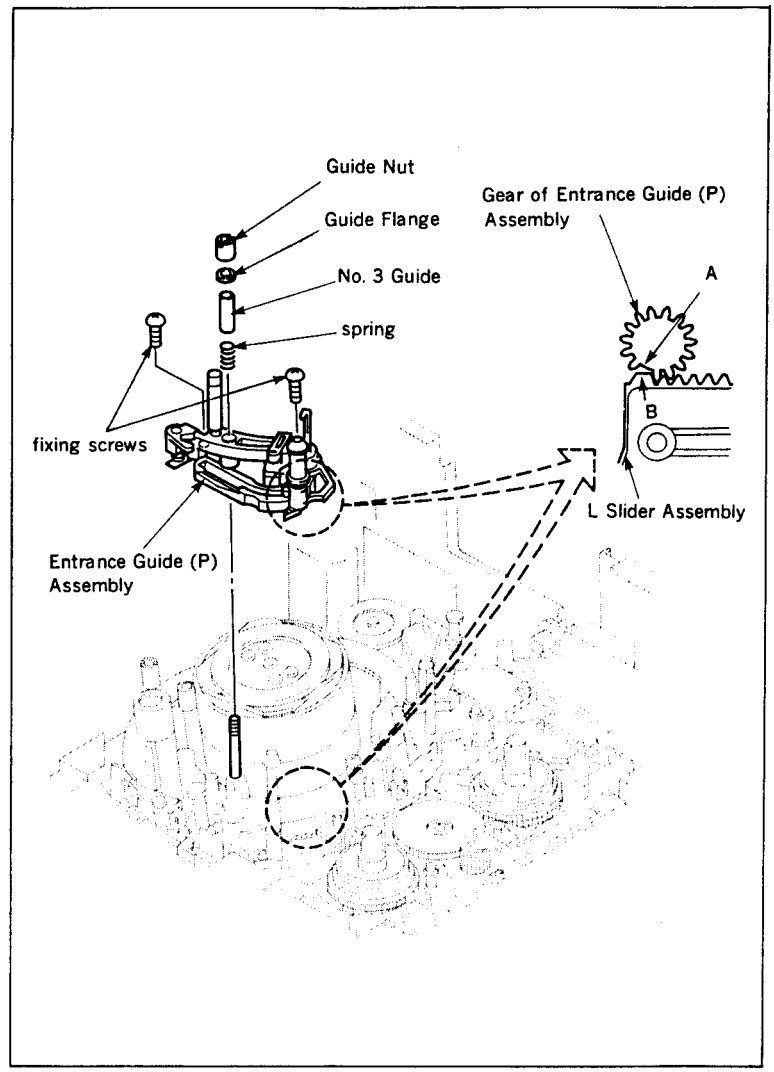

7-2-11. REPLACEMENT OF THE SLANT GUIDE ASSEMBLY

Tool: Mode Selector (Ref. No. J-13)

Removal:

(1) Remove the Cassette-up Compartment Assembly referring to Section 2-13.
(2) Remove the Threading Ring Assembly referring to Section 7-2-4.
(3) Remove the fixing screw and E ring.
(4) Remove the Slant Guide Block Assembly.

Installation:

(1) Operate the L-mode select button of the Mode Selector and align the right edge of the L Slider Assembly and the right side of the Lock Slider M Assebmly. (fig. 2)

Note: At this time, check that the position of the notch on the Slant Guide Drive Gear is placed as shown in figure 2.

(2) Assemble the Guide Base Assembly of new Slant Guide Block Assembly the position of the *unthreading end.

*The Guide Base Assembly is the Reel Table side.

(3) Assemble the parts with Removal Steps (1) to (3) in reverse order.

After replacement, perform the Tape Path Check referring to Section 7-4-6.

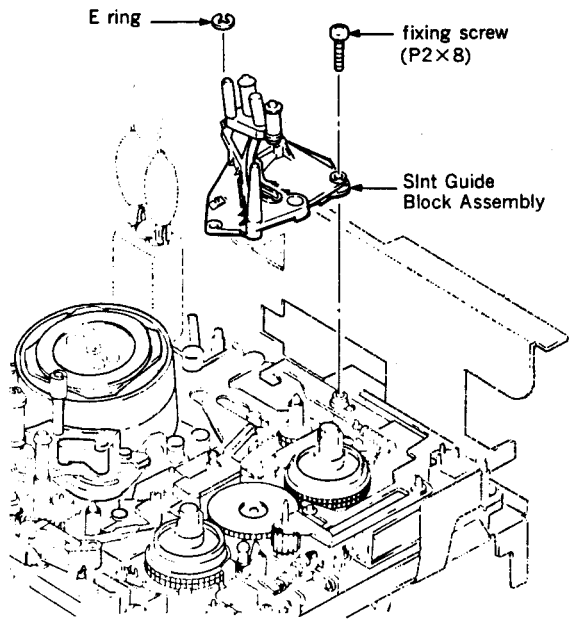

Fig. 1

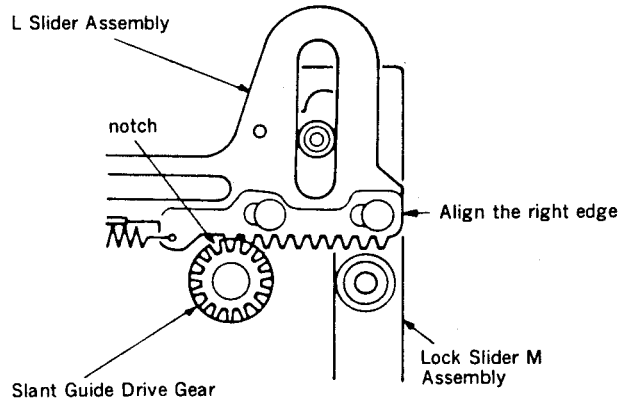

Fig. 2

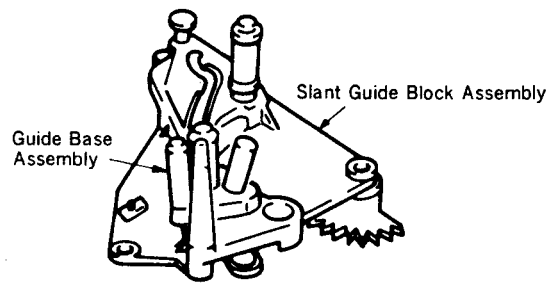

Fig. 3

7-2-12. REPLACEMENT OF THE No. 5 GUIDE BLOCK COMPLETE ASSEMBLY

Removal:

(1) Open the MB-19 Board referring to Section 2-8.

(2) Turn the Rotary Upper Drum counterclockwise and keep heads away from the fixing screw of the Guide Block.

(3) Remove the three fixing screws and remove the No. 5 Guide Block Complete Assembly.

Installation:

(1) Replace the No. 5 Guide Block Complete Assembly with a new one.

(2) Assemble the parts with Removal Steps (1) and (3) in reverse order.

After replacement, perform the Tape Path Adjustment referring to Section 7-4.

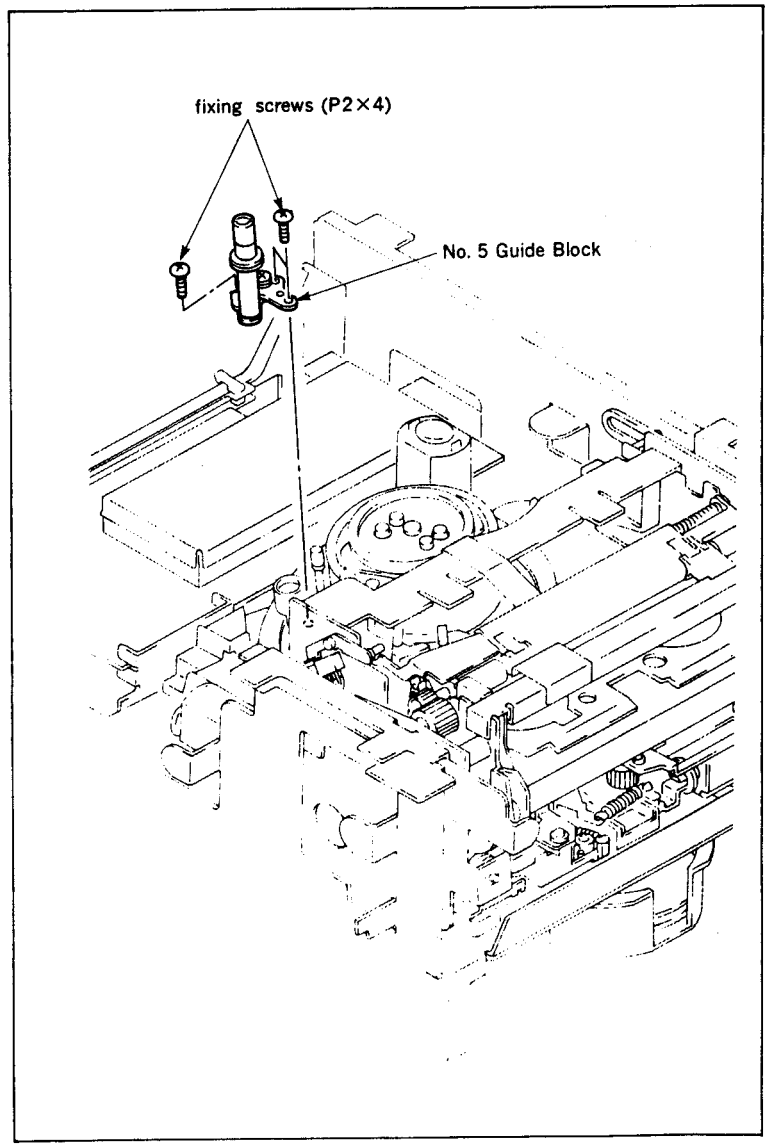

7-2-13. REPLACEMENT OF THE S REEL TABLE ASSEMBLY

Tools: Mode Selector (Ref. No. J-14)
Cassette Tape
Dial Tension Gauge (Ref. No. J-6)
Tension Measurement Reel (30 mm dia.) (Ref. No. J-7)
Sony Oil

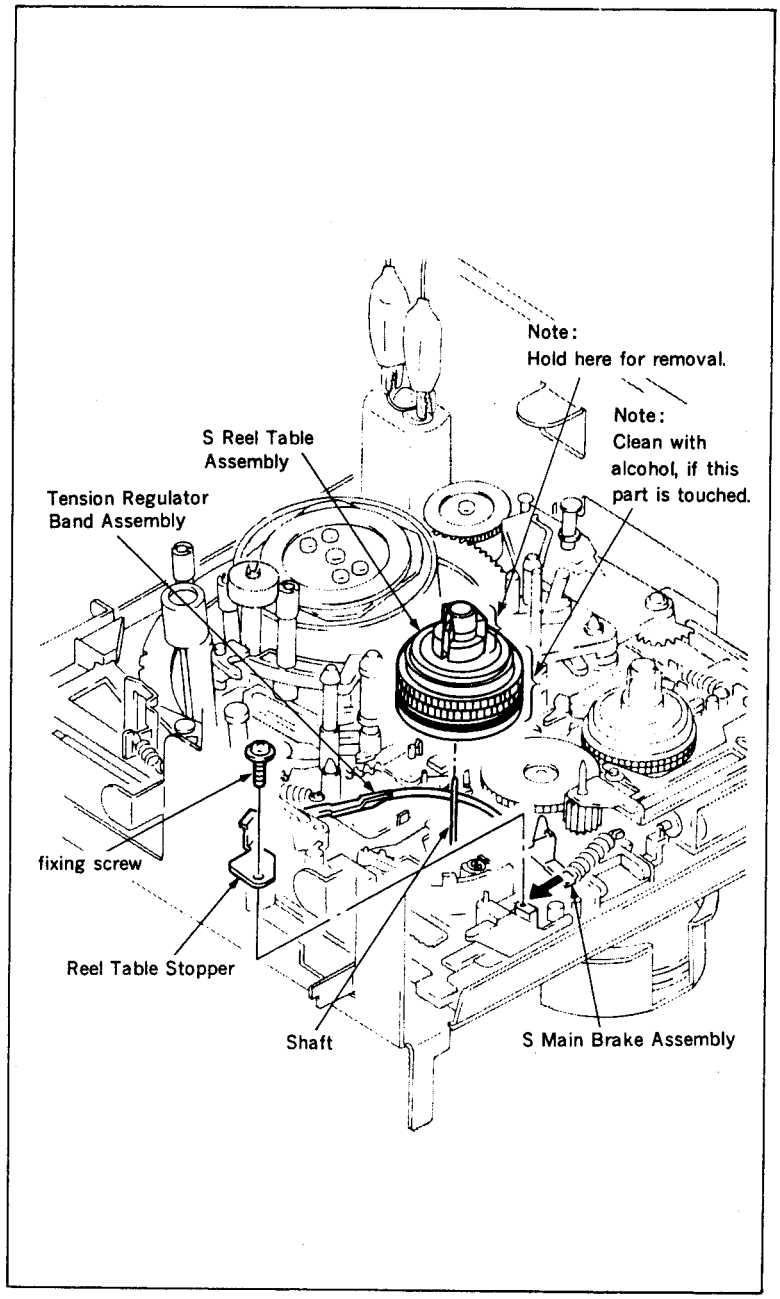

Removal:

(1) Remove the Cassette-up Compartment Assembly referring to Section 2-13.
(2) Press the M-mode select button of the Mode Selector and set to the FF/REW mode.
(3) Remove the fixing screw and remove the Reel Table Stopper.
(4) Remove the S Reel Table Assembly.
Note: Be sure to hold the upper reel claw when removing the S Reel Table. (Note of figure)

Installation:

(1) Apply a half drop of oil on the top point of the Reel Shaft.
(2) Move the S Main Brake Assemvly in the direction of the arrow.
(3) Install the new S Reel Table Assembly while being carefull not to pinch the Tension Regulator Band Assembly.
(4) Install the Reel Table Stopper and tighten it with the fixing screw.
(5) Press the M-mode select button of the Mode Selector and set to the LOADING/UNLOADING mode.
(6) After replacement, perform the FWD running more than two minutes. Then, perform the FWD Back Tension Adjustment referring to Section 7-3-5.
(7) Install the Cassette-up Compartment Assembly referring to Section 2-13.

7-2-14. REPLACEMENT OF THE T REEL TABLE ASSEMBLY

Tools: Mode Selector (Ref. No. J-13)
Sony Oil

Removal:

(1) Remove the Cassette-up Compartment Assembly referring to Section 2-13.
(2) Press the L-mode select button of the Mode Selector and set to the UNLOADING WAIT mode.
(3) Hook the spring which is hooked on the T.S Brake Assembly to the claw of the Lock Slider Assembly.
(4) Remove the stopper washer and remove the T.S Brake Assembly.
(5) Press the M-mode select button of the Mode Selector and set to the EJECT mode.
(6) Move the Drive Gear B Assembly in the direction of the arrow.
(7) Remove the T Reel Table Assembly.

Note: Be sure to hold the upper reel claw when removing the T Reel Table. (Note of figure)

Installation:

(1) Apply a half drop of oil on the top point of the Reel Shaft.
(2) Move the Drive Gear B Assembly in the direction of the arrow. (Check that the Mode Selector sets to EJECT mode.)
(3) Replace the T Reel Table Assembly with a new one.
(4) Assemble the parts with Steps (4) and (5) in reverse order.
(5) Set the L-mode to LOADING TOP mode and set the M-mode to LOADING/UNLOADING mode.
(6) Install the Cassette-up Compartment Assembly referring to Section 2-13.

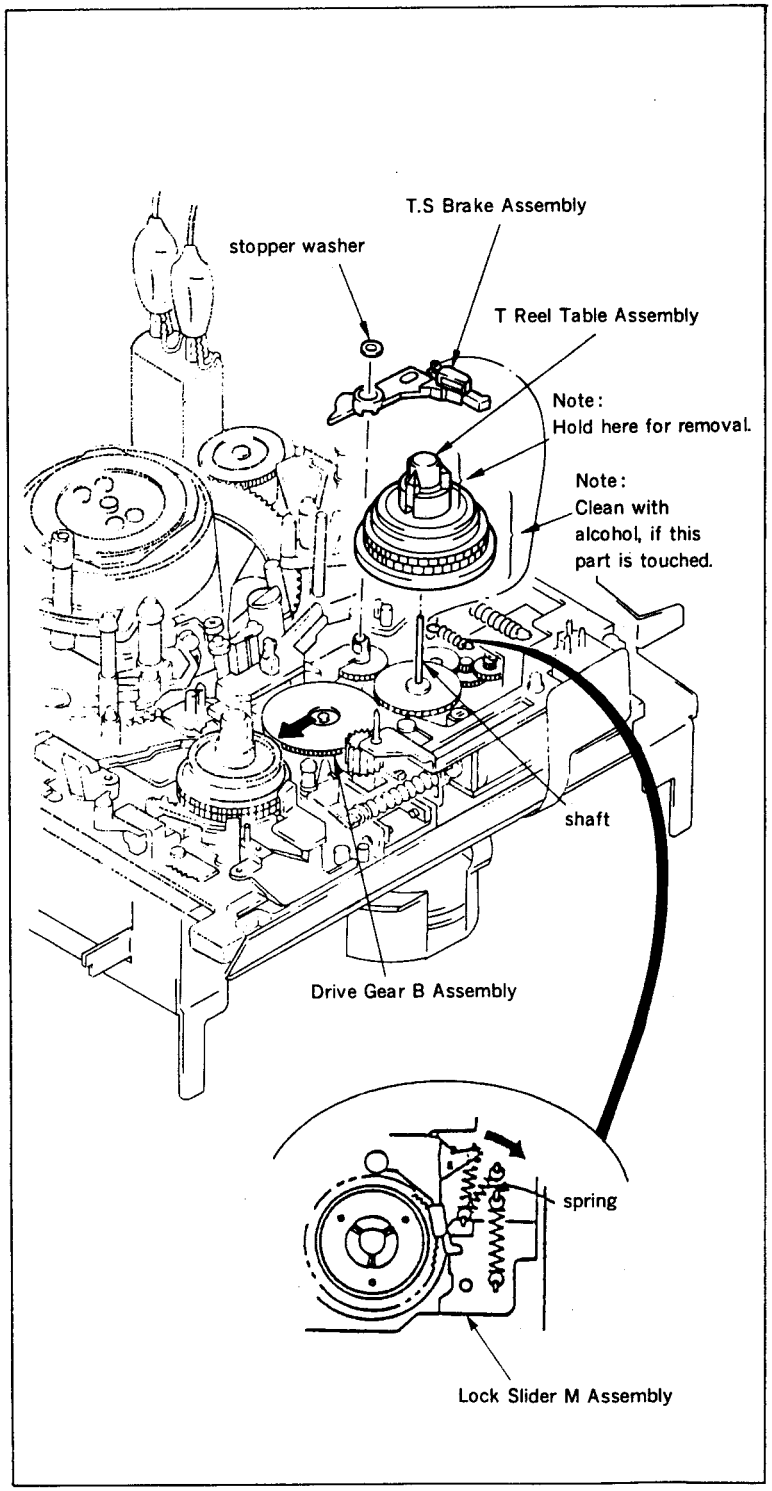

7-2-15. REPLACEMENT OF THE PINCH PRESS ARM ASSEMBLY

Tool: Sony Oil

Removal:

(1) Open the MB-19 Board referring to Section 2-8.

(2) Hook the spring which is hooked to the Spring Hook Assembly to the Pinch Press Assembly as shown in the figure.

(3) Remove the stopper washer and remove the Pinch Press Arm Assembly.

Installation:

(1) Apply a half drop of oil on the shaft.

(2) Replace the Pinch Press Arm Assembly with a new one.

(3) Assemble the parts with Removal Steps (1) to (3) in reverse order.

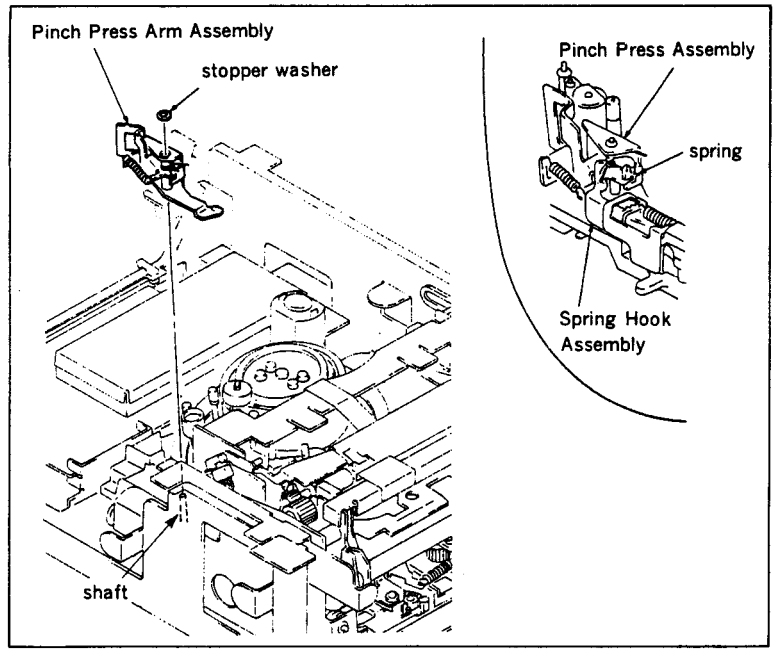

7-2-16. REPLACEMENT OF THE TENSION REGULATOR ARM ASSEMBLY

Tools: Mode Selector (Ref. No. J-13)
Sony Oil
Locking Compound

Removal:

(1) Remove the Cassette-up Assembly referring to Section 2-13.

(2) Replace the spring referring to Removal step (2) of Section 7-2-15.

(3) Remove the spring which is hooked to the Tension Regulator Spring Hook Assembly.
(Make a note of the hooking position.)

(4) Remove the fixing screw and remove the Tension Regulator Spring Hook Assembly.

(5) Press the M-mode select button of the Mode Selector and set to the FF/REW mode.

(6) Remove the claw of the Tension Regulator Band Assembly.

(7) Remove the Tension Regulator Arm Assembly.

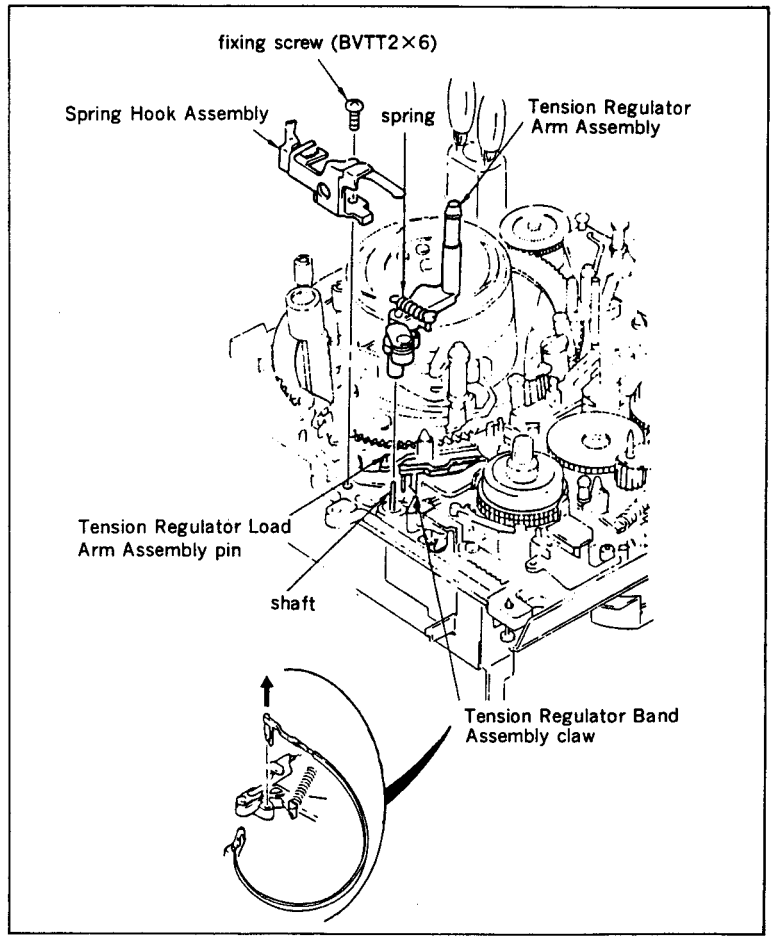

Installation:

(1) Apply a half drop of oil on the shaft.
(2) Replace the Tension Regulator Arm Assembly with a new one.
(3) Install the Tension Regulator Arm Assembly while inserting the pin of the Tension Regulator Load Arm Assembly in the cam groove (on the back of the Arm) of the Tension Regulator Arm Assembly.
(4) Install the claw of the Tension Regulator Band Assembly.
Note: Do not touch the inside of the band and bend it.
(5) Press the M-mode select button of the Mode Selector and set to the LOADING/UNLOADING mode.
(6) Install the Tension Regulator Spring Hook Assembly and tighten it with the fixing screw.
(7) Smear the Locking Compound to the head of the fixing screw.
(8) Assemble the Parts with Removal Steps (1) to (3) in reverse order.

After replacement, perform the Tape Path Check referring to Section 7-4-6.

7-2-17. REPLACEMENT OF THE TENSION REGULATOR BAND ASSEMBLY

Tools: Mode Selector (Ref. No. J-13)
Cassette Tape
Dial Tension Gauge (Ref. No. J-6)
Tension Measurement Reel (30 mm dia.)
(Ref. No. J-7)

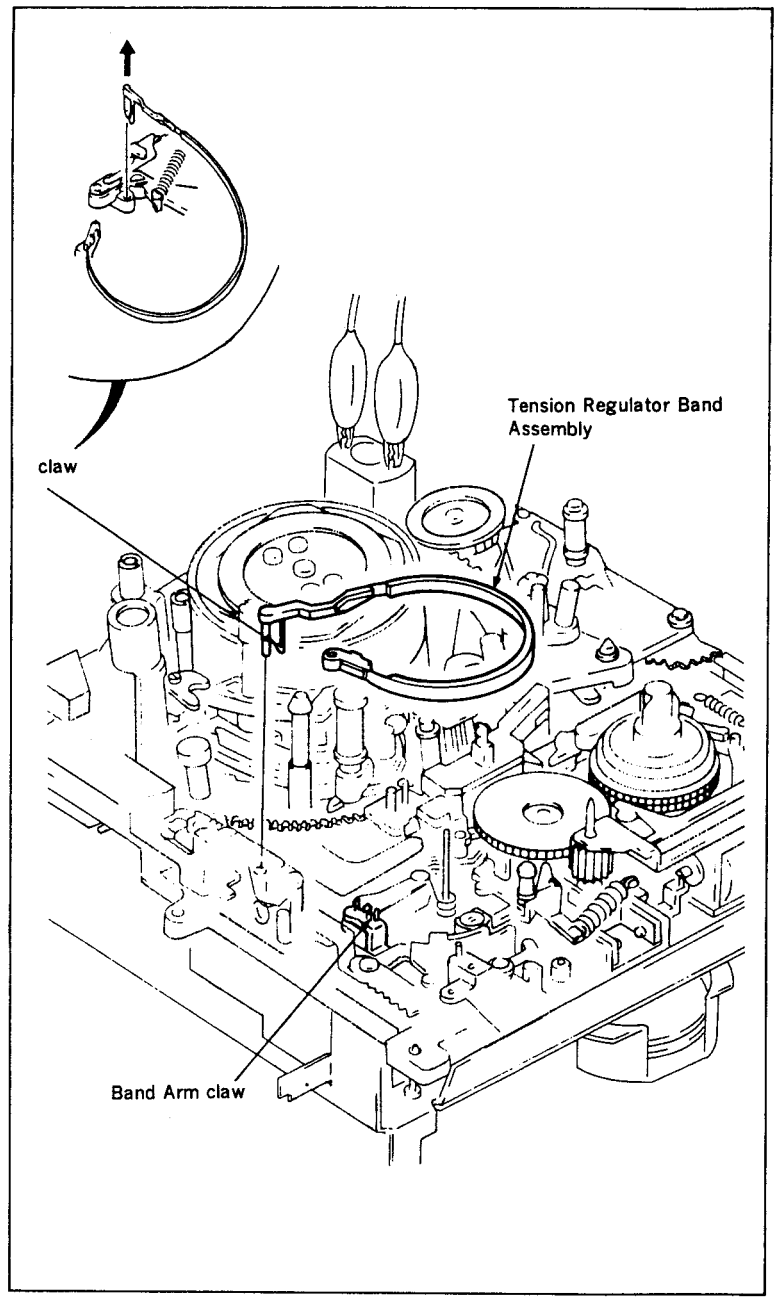

Removal:

(1) Remove the Cassette-up Compartment Assembly referring to Section 2-13.
(2) Remove the S Reel Table Assembly referring to Removal of Section 7-2-13.
(3) Release the claw of the Band Arm and remove one side of the Tension Regulator Band Assembly.
(4) Release the claw from the Tension Regulator Arm Assembly and remove the Tension Regulator Band Assembly.

Installation:

(1) Replace the Tension Regulator Band Assembly with a new one.
(2) Install the Tension Regulator Band Assembly with Removal Steps (3) and (4) in reverse order.

Note: Do not touch the inside of the band and bend it.

(3) Install the S Reel Table Assembly referring Installation of Section 7-2-13.
(4) After replacement, perform the FWD running more than two minutes and then perform the FWD Back Tension Adjustment referring to Section 7-3-5.
(5) Install the Cassette-up Compartment Assembly referring to Section 2-13.

7-2-18. REPLACEMENT OF THE L SLIDER ASSEMBLY

Tools: Mode Selector (Ref. No. J-13)
Sony Grease

Removal:

(1) Remove the Cassette-up Compartment Assembly referring to Section 2-13.
(2) Remove the Fly Wheel referring to Section 7-2-1.
(3) Remove the Threading Ring Assembly referring to Section 7-2-4.
(4) Remove the Entrance Guide (P) Assembly referring to 7-2-10.
(5) Remove the Slant Guide Block Assembly referring to Section 7-2-11.
(6) Press the L-mode select button of the Mode Selector and set to the DRUM START mode.
(7) Remove the Slant Guide Drive Gear.
(8) Remove the two stopper washers from the L Slider Assembly.
(9) While pushing the projection of the RL Arm Assembly in the direction of the arrow, lift the right side of the L Slider Assembly and remove it from the shaft.
(10) Lift the right side of the L Slider Assembly as shown in figure 2 and remove the pin of the Tension Regulator Load Arm Assembly from the cam groove of the Tension Regulator Arm Assembly, and then remove the L Slider Assembly.
(11) Remove the stopper washer and remove the Tension Regulator Load Arm Assembly.

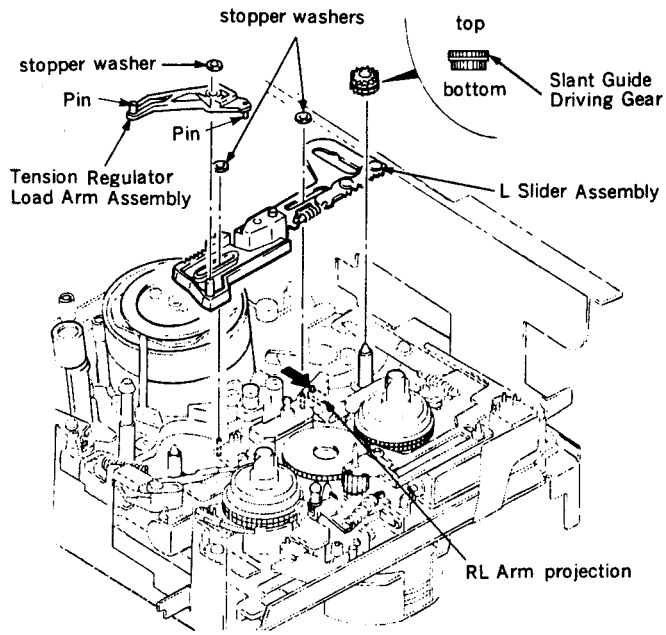

Fig. 1

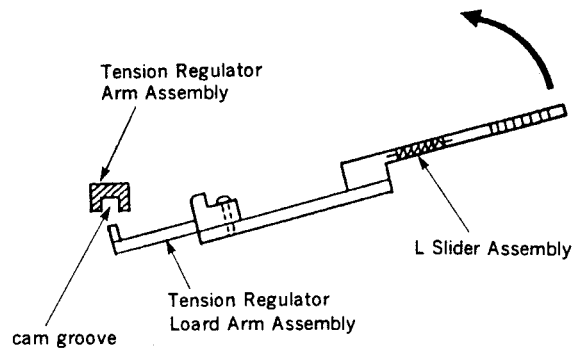

Fig. 2

Installation:

(1) Replace the L Slider Assembly with a new one and smear Sony Grease to the three longitudinal holes as shown in figure 3.

(2) Assemble the parts with Removal Steps (8) to (11) in reverse order.

Note: When inserting the pin of the Tension Regulator Load Arm Assembly in the cam groove of the Tension Regulator Arm Assembly, insert the another pin into the groove of the M Slider.

(3) Press the L-mode select button of the Mode Selector and align the right edges of the L Slider Assembly and the Lock Slider M Assembly. (fig. 4)

(4) Engage the Slant Guide Drive Gear with L Slider Assembly so that the notch of the Drive Gear is 1 tooth away from the left and gear of the L Slider Assembly as shown in the figure 4.

(5) Assemble the parts with Removal Steps (1) to (5) in reverse order.

After replacement, perform the Tape Path Adjustment referring to Section 7-4.

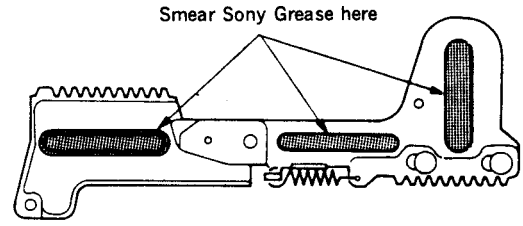

Fig. 3

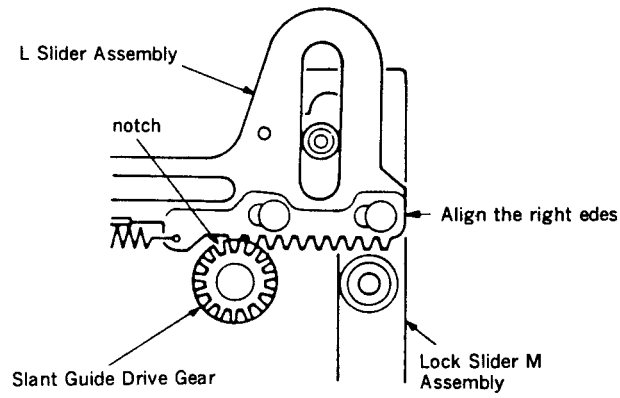

Fig. 4

7-2-19. REPLACEMENT OF THE L-SWITCH ASSEMBLY

Tools: Mode Selector (Ref. No. J-13)
Sony Oil
Sony Grease

Removal:

(1) Remove the Cassette-up Compartment Assembly referring to Section 2-13.
(2) Remove the Fly Wheel referring to Section 7-2-1.
(3) Remove the Threading Ring Assembly referring to Section 7-2-4.
(4) Remove the Entrance Guide (P) Assembly referring to Section 7-2-10.
(5) Remove the Slant Guide Block Assembly referring to Section 7-2-11.
(6) Remove the L Slider Assembly referring to Section 7-2-18.
(7) Remove the Lock Slider Retainer.
(8) Remove the tension spring which is hooked to the Lock Slider A.
(9) Remove the fixing screw and remove the Lock Slider A.
(10) Remove the stop washer of the Drive Changer Assembly and remove the torsion spring.
(11) Remove the Drive Changer Assembly.
(12) Disconnect the connector (6P) on the L-switch Assembly.
(13) Remove the two fixing screws and remove the L-switch Assembly.

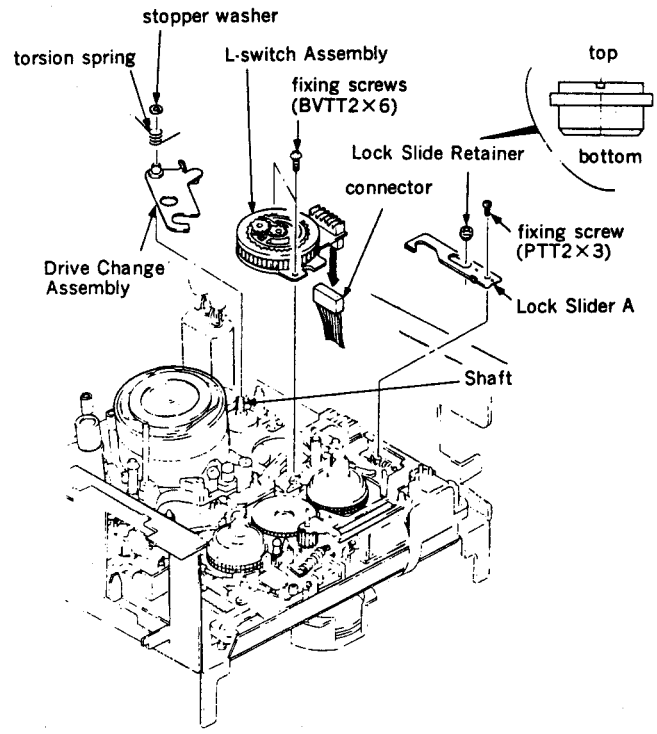

Fig. 1

Installation:

(1) Replace the L-switch Assembly with a new one and apply a half drop of oil on the Planetary Roller Shaft.

(2) Assemble the parts with Removal Steps (12) and (13) in reverse order.

(3) Press the L-mode select button (right or left) of the Mode Selector and check that the L-switch Assembly rotates.

(4) Apply a half drop of oil on the fixing shaft of the Drive Changer Assembly.

(5) Smear Sony Grease to the U groove of the Drive Changer Assembly as shown in figure 2.

(6) Assemble the parts with Removal Steps (10) and (11) in reverse order.

(7) Press the L-mode select button (right or left) of the Mode Selector and check that the L-switch Assembly rotates.

(8) Assemble the parts with Removal Steps (7) to (9) in reverse order.

(9) Press the L-mode select button (righ or left) of the Mode Selector so that the Planetary Roller Shaft is placed to the position shown in figure 3.

(10) Assemble the parts with Removal Steps (1) to (6) in reverse order.

After replacement, perform the Tape Path Adjustment referring to Section 7-4.

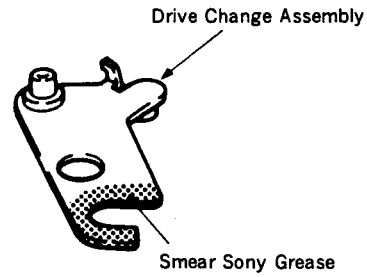

Fig. 2

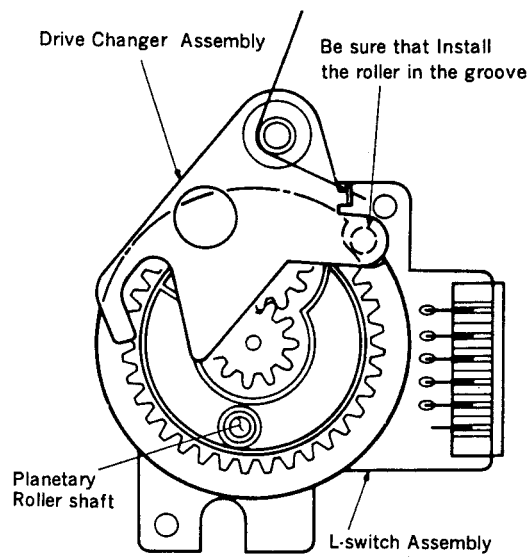

Fig. 3

7-2-20. REPLACEMENT OF THE PLUNGER SOLENOID

Removal:

(1) Open the MB-19 Board referring to Section 2-8.

(2) Remove the Cassette-up Compartment Assembly referring to Section 2-13.

(3) Remove the spring which is hooked to the Lock Slider M Assembly.

(4) Remove the two stopper washers.

(5) Remove the fixing screw and remove the Lock Slider M Assembly.

(6) Unsolder the three terminals of the Plunger Solenoid of the FP-206 Board.

(7) Remove the two fixing screws and remove the Plunger Solenoid. (At this time, be careful not to damage the T Reel Assembly with a screwdriver, and do not touch it.)

Installation:

(1) Replace the Plunger Solenoid with a new one.

(2) Insert the pin of the Plunger Solenoid into the hole of the P Arm and install the new Plaunger Solenoid with the two fixing screws. (At this time, be careful not to damage the T Reel Assembly with a screwdriver and do not touch it.)

(3) Assemble the parts with Removal Steps (1) to (6) in reverse order.

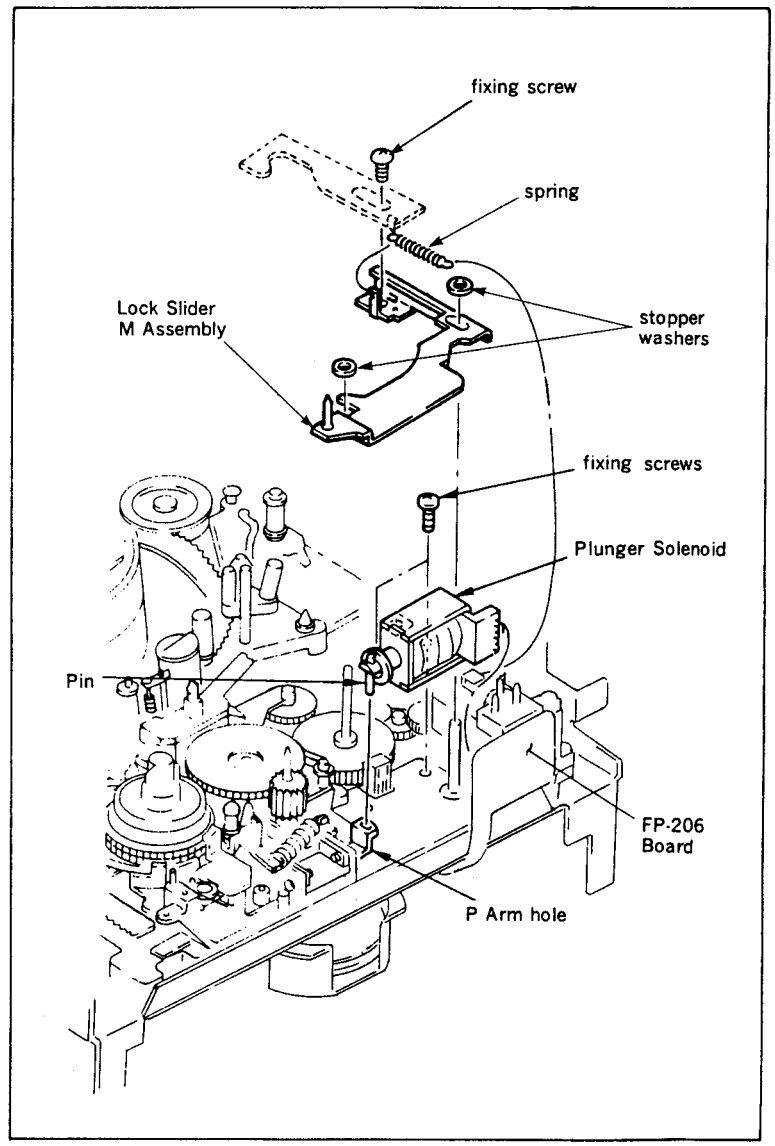

7-2-21. REPLACEMENT OF THE M-SWITCH ASSEMBLY

Tools: Mode Selector (Ref. No. J-13)
Sony Oil

Removal:

(1) Remove the Cassette-up Compartment Assembly referring to Section 2-13.
(2) Disconnect the connector (CN301) on the RS-31 Board.
(3) Remove the T Reel Table Assembly referring to Section 7-2-14.
(4) Remove the stopper washer and remove the Drive Gear B Assembly.
(5) Remove the LD-1 Board. (fig. 1)
(6) Remove the Lock Slider M Assembly referring to Removal Steps (3) to (5) of Section 7-2-20.
(7) Remove the tension spring and remove the B Release Arm Assembly.
(8) Check that the M-mode is put into EJECT mode.
(9) Remove the stopper washer and remove the Mode Output Gear.
(10) Release the two claws of the Control Motor Cover and remove the Push Switch.
(11) Disconnect the connctor (6P) on the M-switch Assembly.
(12) Remove the two fixing screws and remove the Control Motor Cover L.
(13) Remove the fixing screw and while lifiting up the M-switch Assembly, push the T.S Release Arm in the direction of the arrow A. Then push the T Main Brake Assembly in the direction of the arrow B and remove the M-switch Assembly.

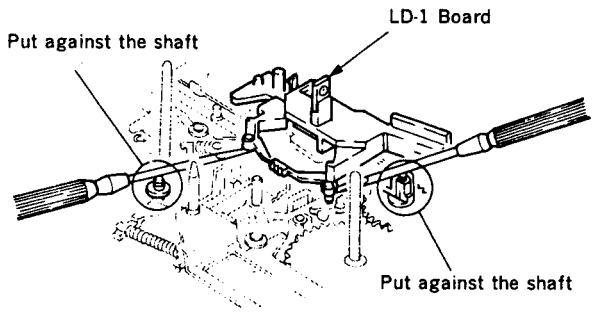

Fig. 1

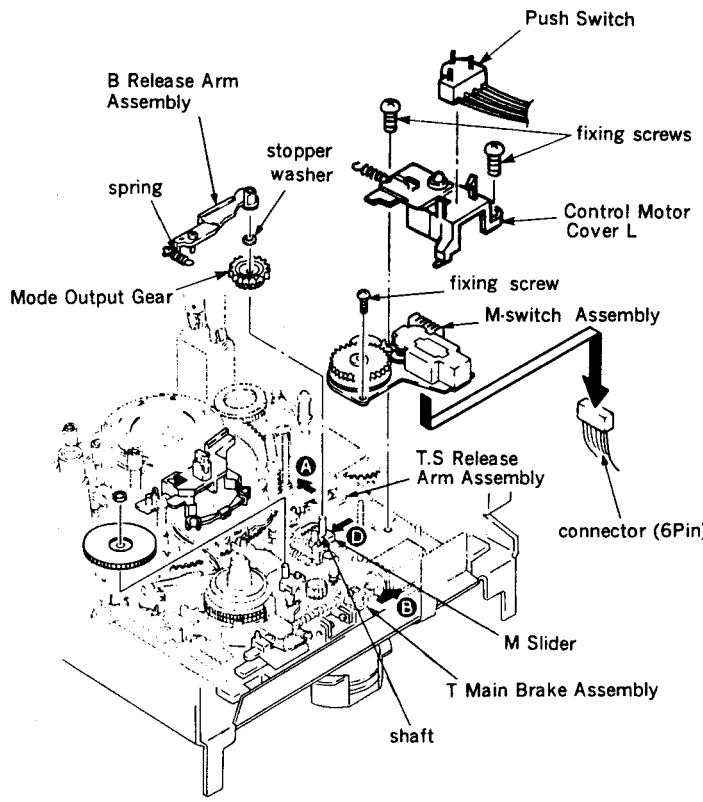

Fig. 2

How to removal the DC Motor:

(1) Unsolder the two terminals at the C points as shown in figure 3 and remove the DC Motor from the MS-4 Board. (fig. 3)

Installation:

(1) Replace the M-switch Assembly with a new one.
(2) Assemble the parts with Removal Steps (10) to (13) in reverse order.
(3) Check that the mechanical block is put into EJECT mode.
(4) Check that the M Slider moves fully in the direction of arrow D. (fig. 2)
(5) Apply a half drop of oil on the shaft of the Mode Output Gear. (fig. 2)
(6) Install the Mode Output Gear so that the center of the M-switch Assembly Gear and the two positioning holes are lined up. (fig. 4)
(7) Install the stopper washer to the shaft of the Mode Output Gear.
(8) Press the M-mode select button of the Mode Selector and set to the LOADING/UNLOADING mode.
(9) Assemble the parts with Removal Steps (1) to (7) in reverse order.

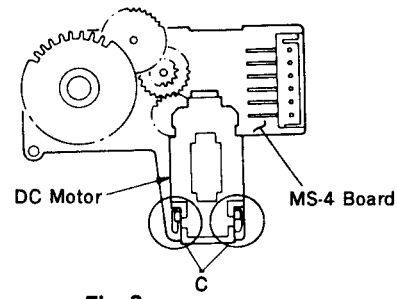

Fig. 3

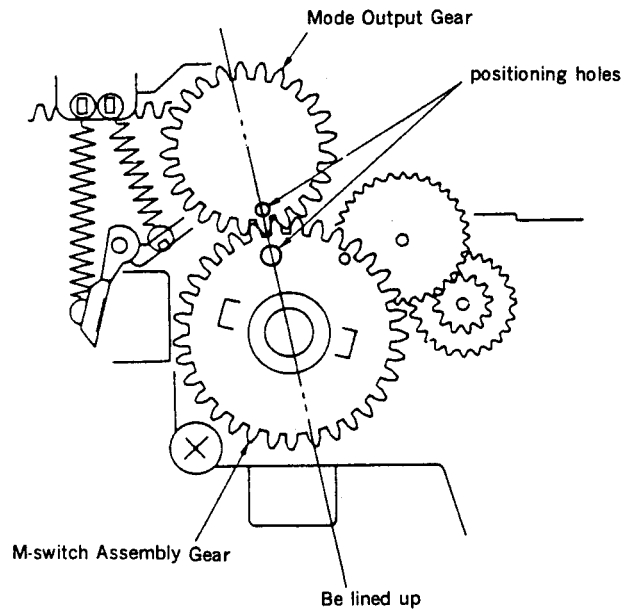

Fig. 4

7-2-22. REPLACEMENT OF THE M SLIDER

Tools: Mode Selector (Ref. No. J-13)
Sony Oil
Sony Grease

Removal:

(1) Remove the Cassette-up Compartment Assembly referring to Section 2-13.
(2) Remove the Threading Ring Assembly referring to Section 7-2-4.
(3) Remove the S Reel Table Assembly referring to Section 7-2-13.
(4) Remove the T Reel Table Assembly referring to Section 7-2-14.
(5) Remove the Pinch Press Arm Assembly referring to Section 7-2-15.
(6) Remove the Tension Regulator Arm Assembly referring to Section 7-2-16.
(7) Remove the Tension Regulator Band Assembly referring to Section 7-2-17.
(8) Remove the Drive Gear (B) Assembly, LD-1 Board, Lock Slider M Assembly and B Release Arm Assembly referring to Removal Steps (2) to (7) of Section 7-2-21.
(9) Remove the Tension Regulator Load Arm Assembly referring to Removal Step (11) of Section 7-2-18.
(10) Remove the tension spring which is hooked to the S Main Brake Assembly.
(11) Remove the two stopper washers and remove the S Main Brake Assembly and T Main Brake Assembly.
(12) Operate the Mode Selector and set the L-mode to LOADING TOP mode and the M-mode to LOADING/UNLOADING mode.
(13) Remove the fixing screw and remove the Drive Complete Assembly.
(14) Remove the Mode Output Gear referring to Removal Steps (8) and (9) of Section 4-21.
(15) Remove the two tension springs which are hooked to the REW Brake Assembly and B Release Slider.
(16) Remove the REW Brake Assembly and remove the REW Brake Spacer.
(17) Remove the stopper washer and remove the B Release Slider.
(18) Remove the stopper washer and remove the Ring Lock Spring and RL Arm.
(19) Move the M Slider to the right.
At this time, leave about 5mm space between the fixing shaft and left edge of M Slider's longitudinal hole.
(20) Remove the E ring and remove the Pinch Press Lever Assembly.
(21) Remove the tension spring and remove the Hard Brake S.
(22) Remove the stopper washer and push the Mode Arm in the direction of the arrow. Lift up the left side of the M Slider to remove.

Installation:

(1) Replace the M Slider with a new one and smear grease. (fig. 2)
(2) Push the Mode Arm in the direction of the arrow. (fig. 1) While being careful to the positional relationship with other parts install the M Slider. Then install the stopper washer. (fig. 3)
(3) Install the Hard Brake S and hook the tension spring to it.
(4) Smear grease to the Pinch Press Lever Assembly. (fig. 4)
(5) Apply a half drop of oil to the part under the groove of Pinch Press Lever Assembly's shaft.
(6) Assemble the parts with Removal Steps (16) to (18) and (20) in reverse order.
(7) Hook the two tension springs to the REW Brake Assembly and B Release Slider.

Note: Hook the two tension springs as follows and be careful not to mix them.

- B Release Slider Spring: diameter 2 mm, wire diameter 0.18mm
- REW Brake Assembly Spring: diameter 1.6 mm, wire diameter 0.12mm

(8) Move the M Slider to the left fully.

(9) Press the M mode select button of the Mode Selector and set to EJECT mode.

(10) Install the Mode Output Gear referring to Installation Steps (5) to (7) in Section 7-2-21.

(11) Press the M mode select button of the Mode Selector and set to the LOADING/UNLOADING mode.

(12) Insert the horizontal shaft of the Drive Complete Assembly into the groove of the Upper and Lower Selection Arm and tighten the fixing screw.

(13) Assemble the parts with Removal Steps (1) to (11) in reverse order.

After replacement, perform the Tape Path Check referring to Section 7-4-6.

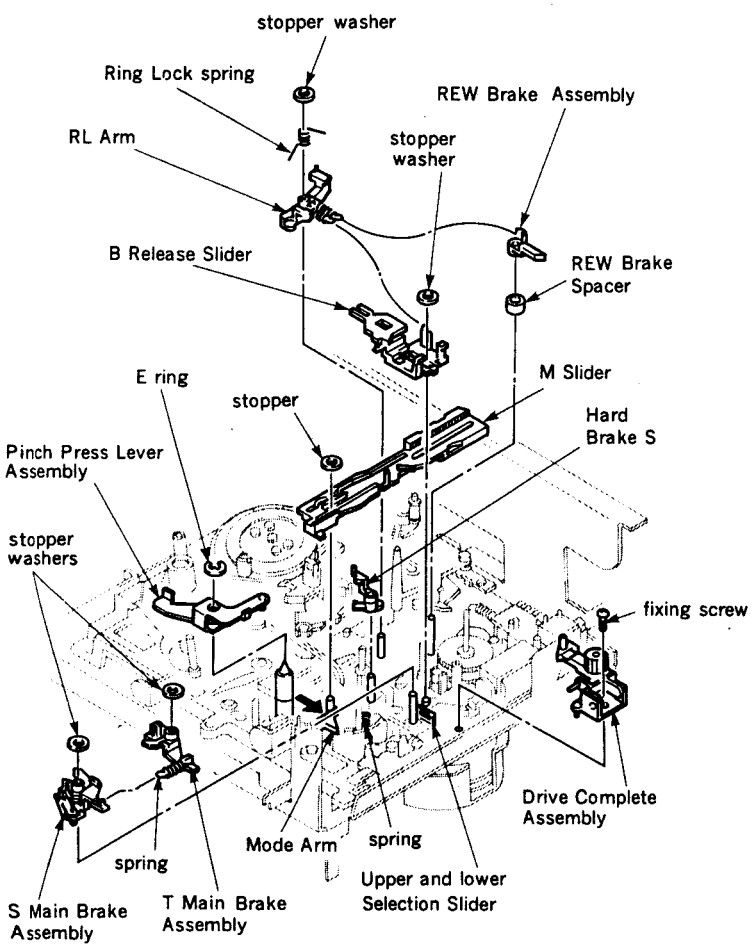

Fig. 1

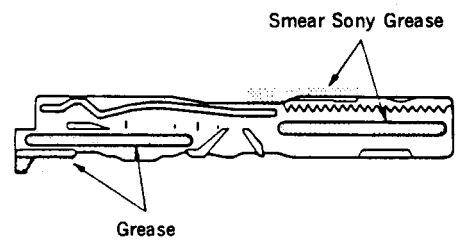

Fig. 2

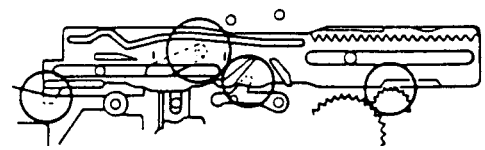

Fig. 3

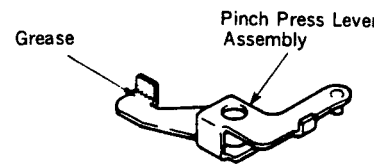

Fig. 4

7-2-23. INSTALLATION OF THE BLOCK PLATE ASSEMBLY

When removing the Block Plate Assembly, installing procedures are as follows:

(1) Push the Lock Slider Assembly in the direction of the arrow and lift the Cassette Holder.
(2) Check that the positional relationship between the Lock Lever and pin is as shown in figure A.
(3) Turn the Worm Gear in the direction of the arrow and engage the Gear B and Gear C.
(4) While checking that positional relationship between the pin of the Gear Lever Assembly and Lock Lever is as shown in figure B, fix the Block Plate Assembly and Blacket (LEFT) with three fixing screws.
(5) Check that the Gear C and D are engaged.

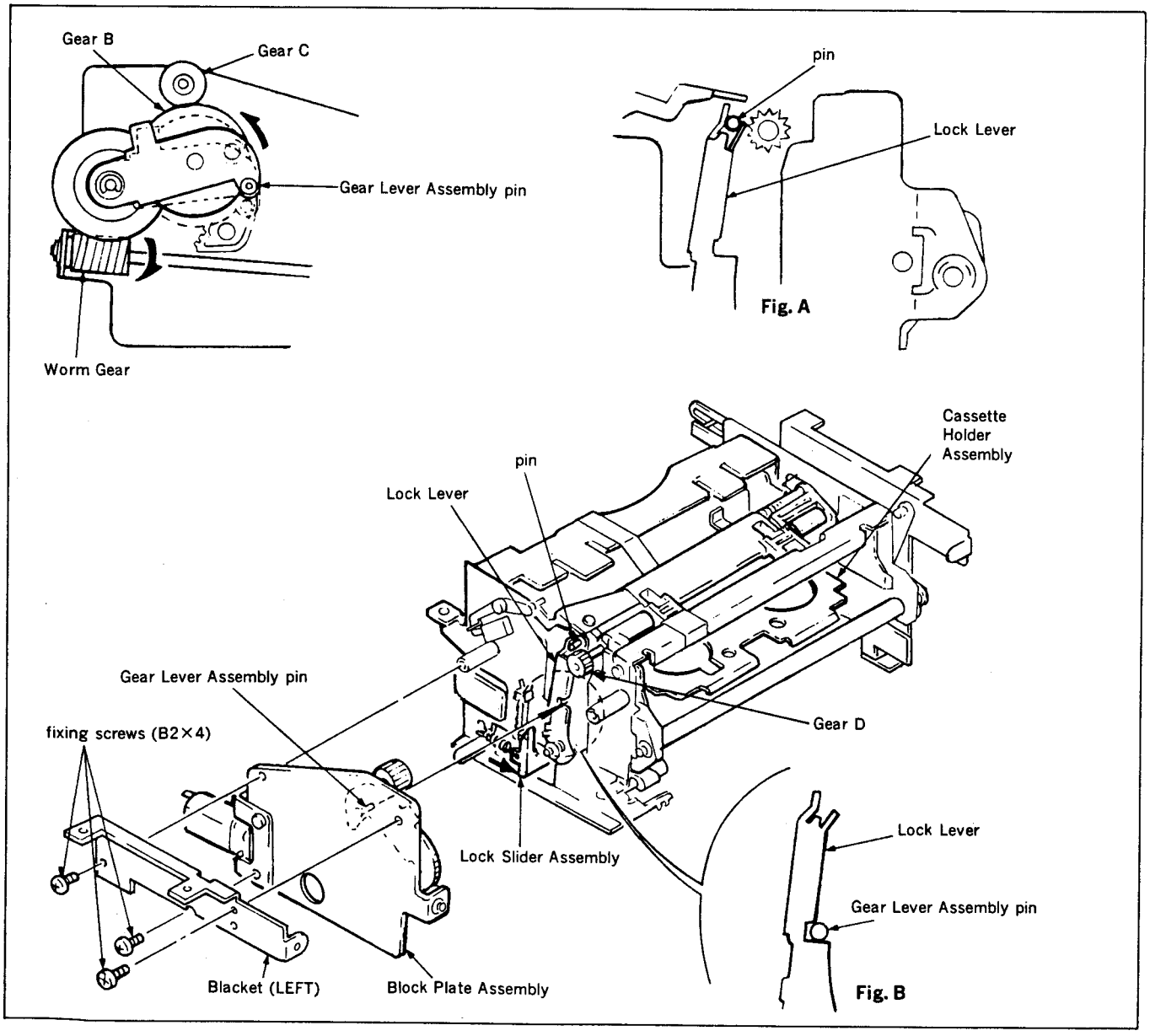

7-2-24. PARALLELISM ADJUSTMENT OF THE CASSETTE HOLDER BLOCK

When the following trouble happen, perform this adjustment. When inserting or ejecting the cassette, it is caught in the Cassette Holder Assembly or Joint Assembly, etc., and does not move smoothly.

Adjustment procedure:

(1) Open the MB-19 Board referring to Section 2-8.
(2) Remove the Cassette-up Compartment Assembly referring to Section 2-13.
(3) Remove the four fixing screws and remove the Window Assembly.
(4) Loosen the screw (PSW2 X 4) from the hole of the Braket (RIGHT).
(5) Push the bottom of the Cassette Holder Assembly against the reinforcement, and adjust the position so that there is no clearance at points A and B.
(6) Tighten the screw (PSW2 X 4) and smear locking compound to it.
(7) Assemble the parts with Steps (1) to (3) in reverse order.

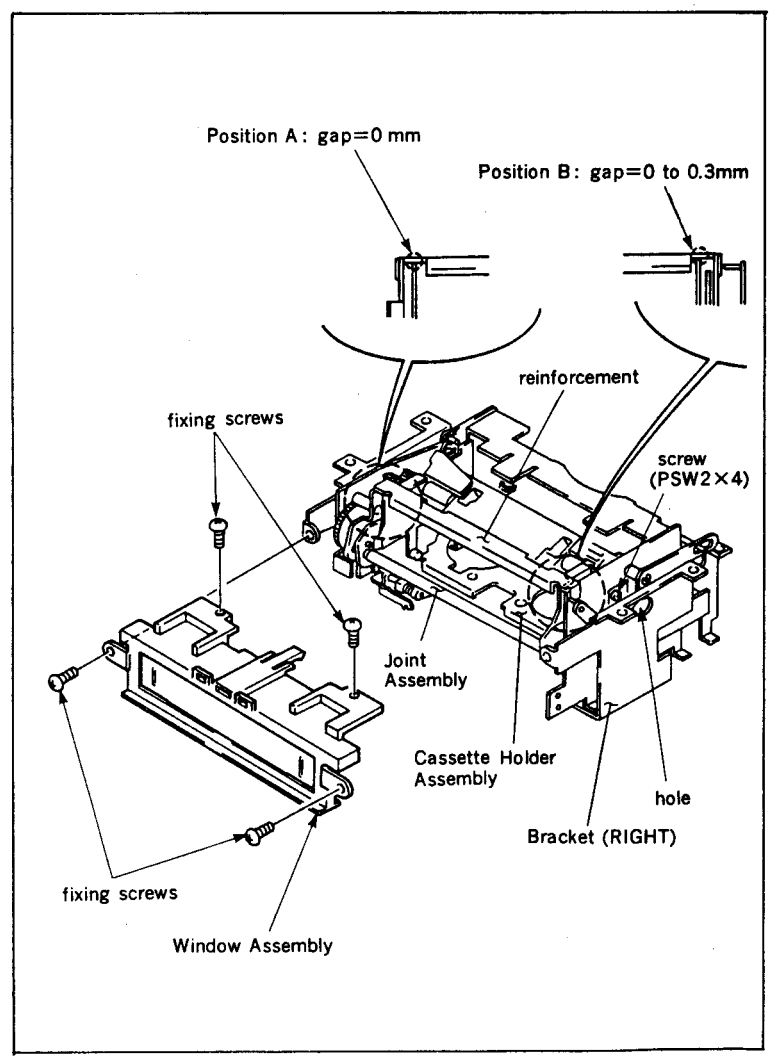

7-3. TORQUE AND BACK TENSION ADJUSTMENT

After removing the Mechanical Deck and Cassette-up Compartment from the unit referring to Section 2-5 and 2-13, perform these adjustments except for Section 7-3-4.

7-3-1. CHECK OF THE MAIN BRAKE TORQUE

1. S Main Brake Torque

Tools: Mode Selector (Ref. No. J-13)
Tension Measurement Reel
(Ref. No. J-8)
Dial Tension Gauge (Ref. No. J-6)

Mode: Press the M-mode select button of the Mode Selector and set to the FF/REW mode.

Check Procedure:

(1) Set the Tension Measurement Reel on the S Reel Table and put the Dial Tension Gauge at the end of the string.

(2) Pull out the Dial Tension Gauge in the direction of the arrows and check that those readings meet the required specifications as shown in figure 1 and 2.

Note: Both S Main Brake and S Soft Brake work in the FF/REW mode.

Adjustment Procedure:

(1) If the reading do not meet the required specification, replace the S Main Brake or S Reel Table Assembly.

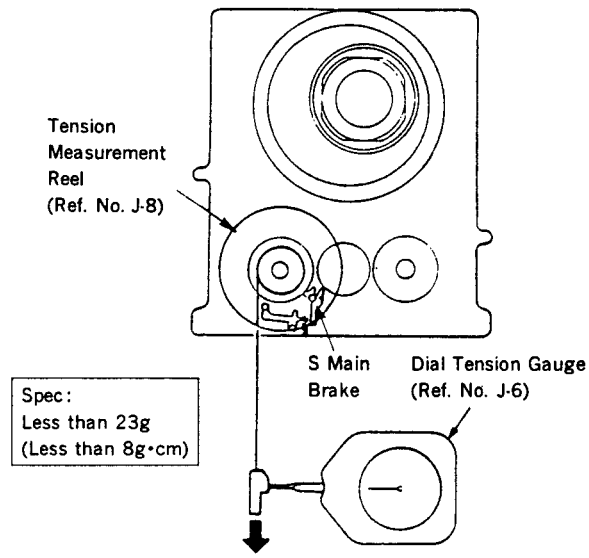

Fig. 1

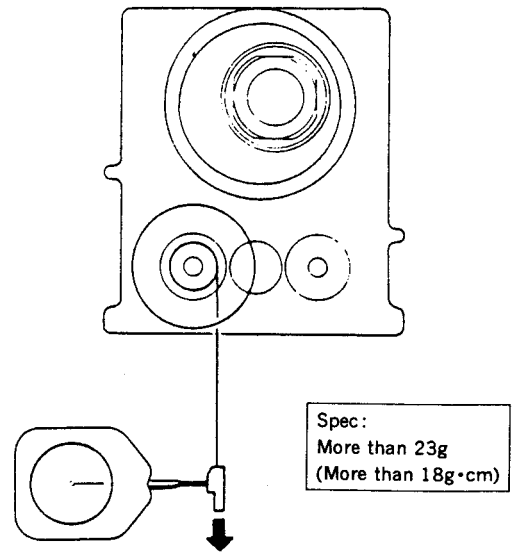

Fig. 2

2. T Main Brake Torque

Tools: Mode Selector (Ref. No. J-13)
Tension Measurement Reel
(Ref. No. J-8)
Dial Tension Gauge (Ref. No. J-6)

Mode: Press the M-mode select button of the Mode Selector and set to the FF/REW mode.

Check Procedure:

(1) Set the Tension Measurement Reel on the T Reel Table and put the Dial Tension Gauge at the end of the string.

(2) Pull out the Dial Tension Gauge in the direction of the arrows and check that these readings meet the required specifications as shown in figure 1 and 2.

Note: Both T Main Brake and REW Brake work in the FF/REW mode.

Adjustment Procedure:

(1) If the reading do not meet the required specification, replace T Main Brake or T Reel Table.

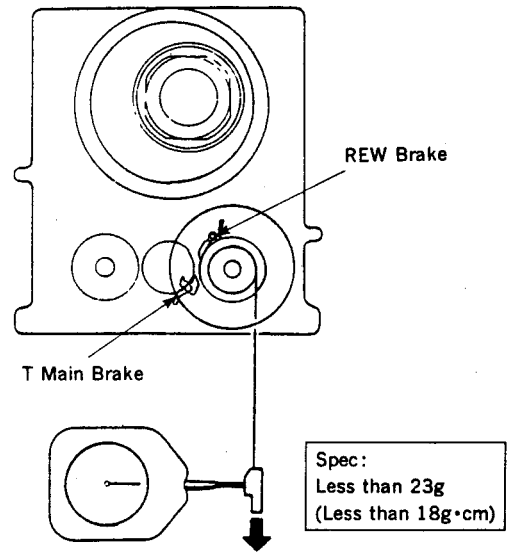

Fig. 1

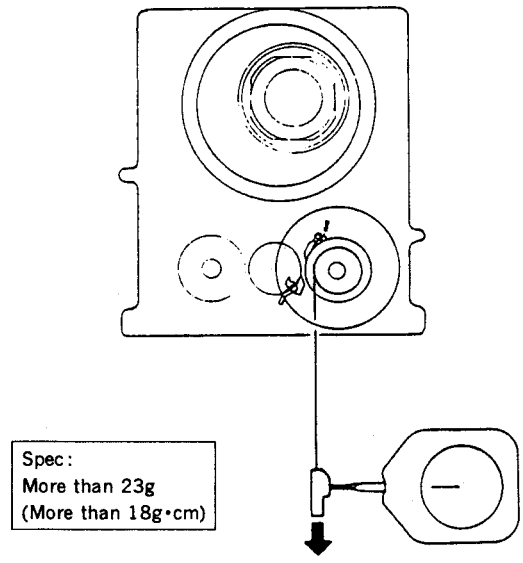

Fig. 2

7-3-2. CHECK OF THE SOFT BRAKE TORQUE

1. S Side Soft Brake Torque

Tools: Mode Selector (Ref. No. J-13)
Tension Measurement Reel
(Ref. No. J-8)
Dial Tension Gauge (Ref. No. J-6)

Mode: Press the M-mode select button of the Mode Selector and set to the FF/REW mode.

Check Procedure:

(1) Set the Tension Measurement Reel on the S Reel Table and put the Dial Tension Gauge at the end of the string.
(2) Release the S Main Brake by hand.
(3) While releasing the S Main Brake, pull out the Dial Tension Gauge in the direction of the arrow. Check that this reading meets the required specification.

Adjustment Procedure:

(1) Adjust the strength of S Soft Brake Spring by streching or cutting.

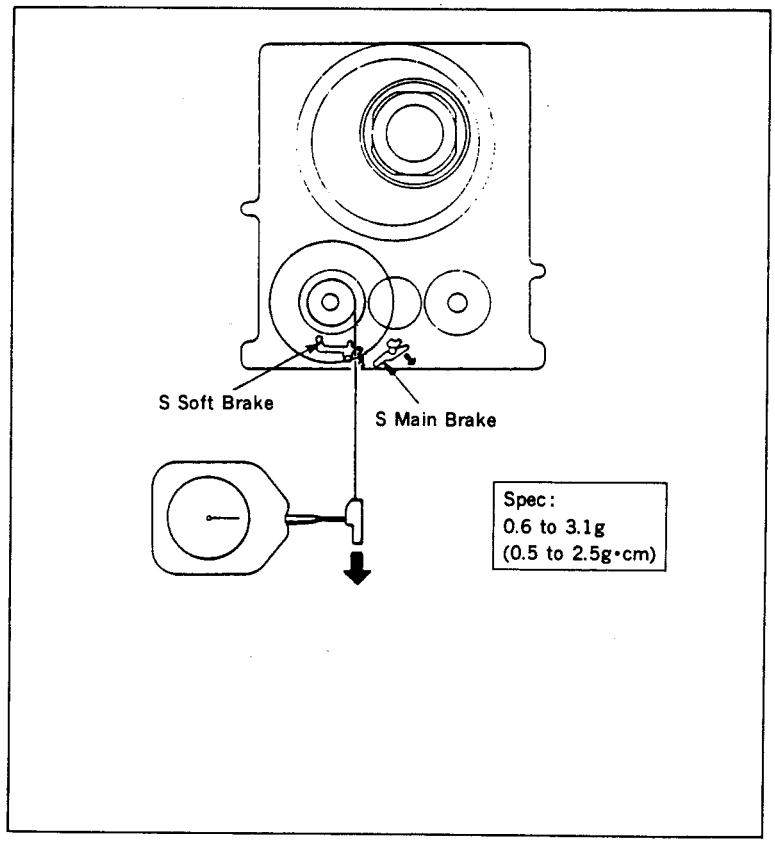

2. T Side Soft Brake Torque

Tools: Mode Selector (Ref. No. J-13)
Tension Measurement Reel
(Ref. No. J-8)
Dial Tension Gauge (Ref. No. J-6)

Mode: Press the M-mode button of the Mode Selector and set to the RVS mode.

Check Procedure:

(1) Set the Tension Measurement Reel on the T Reel Table and put the Dial Tension Gauge at the end of the string.

(2) Release the T Main Brake by hand.

(3) While releasing the S Main Brake, pull out the Dial Tension Gauge in the direction of the arrow. Check that this reading meets the required specification.

Note: Both T Soft Brake and REW Brake work in the RVS mode.

Adjustment Procedure:

(1) Change the position of the tension spring which is hooked to the T Soft Brake.

. more than the spec. : Hook the left side.

. less than the spec. : Hook the right side.

(2) If the reading do not meet the required specification with Step (1), replace the T Soft Brake or REW Brake, or both of them.

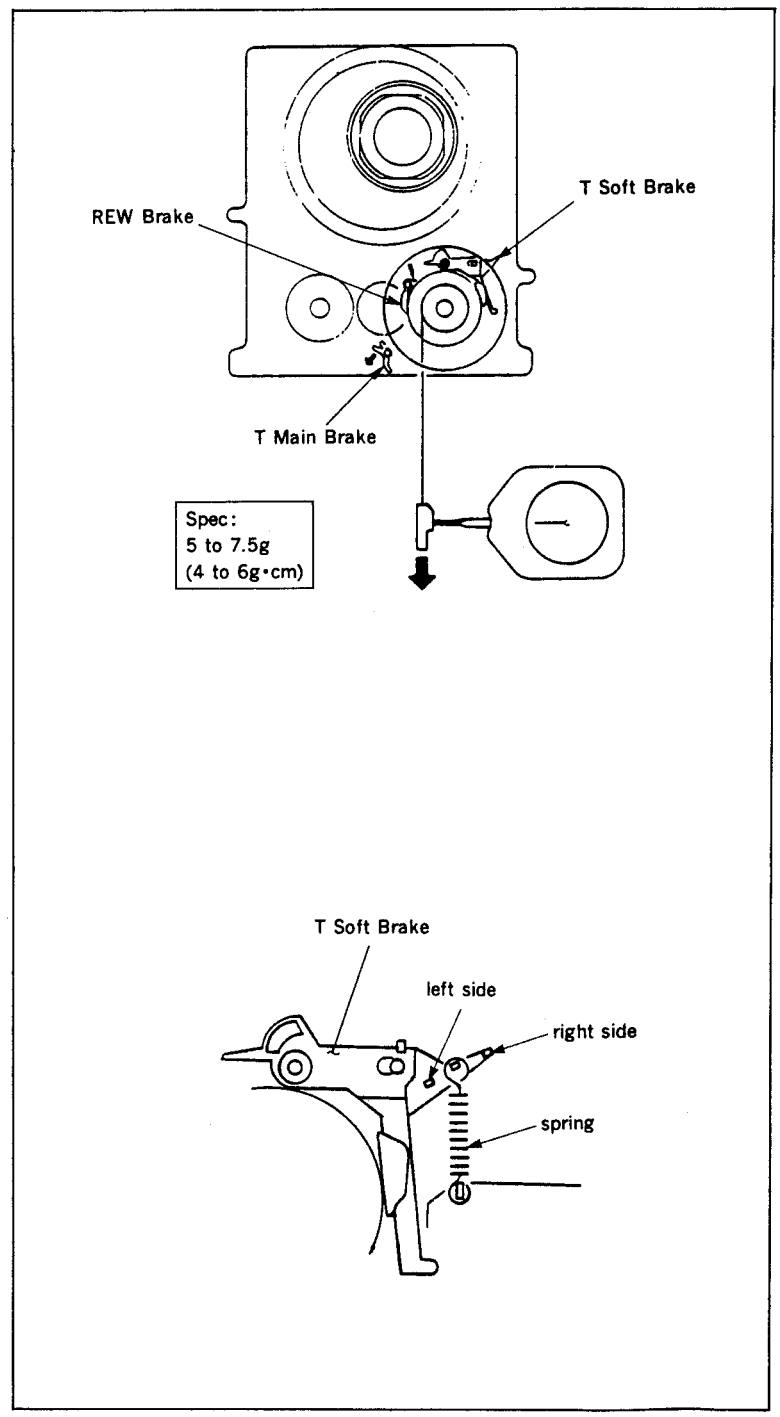

7-3-3. CHECK OF THE REW BRAKE TORQUE

Tools: Mode Selector (Ref. No. J-13)
Tension Measurement Reel
(Ref. No. J-8)
Dial Tension Gauge (Ref. No. J-6)

Mode: Press the M-mode select button of the Mode Selector and set to the FF/REW mode.

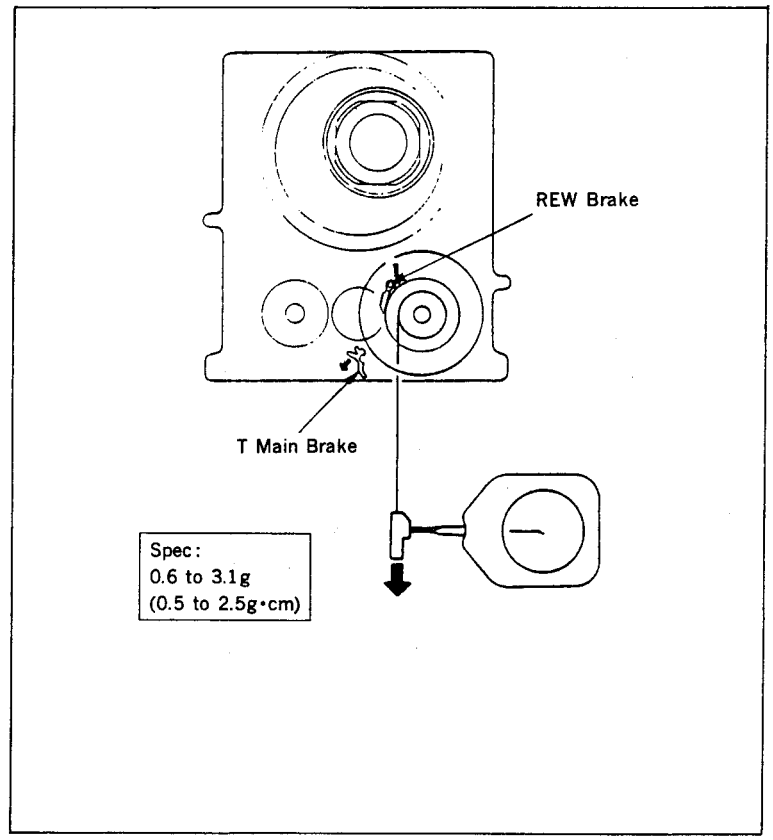

Check procedure:

(1) Set the Tension Measurement Reel on the T Reel Table and put the Dial Tension Gauge at the end of the string.
(2) Release the T Main Brake by hand.
(3) While the releasing the T Main Brake, pull out the Dial Tension Gauge in the direction of the arrow. Check that this reading meet the required specification.

Adjustment Procedure:

(1) Adjust the strength of the tension spring by streching or cutting, or replace the REW Brake with a new one.

7-3-4. CHECK BY THE FWD, RVS TAKE-UP TORQUE CASSETTE

Tool: FWD, RVS take-up torque cassette
(Ref. No. J-12)

Mode: PLAY mode

Check Procedure:

(1) Insert the FWD, RVS take-up torque cassette in the unit.
(2) Put the unit into the PLAY mode, check that the torque reading of the T Reel Table meets the required specification.
Spec. : 9.5 to 15.5 g.cm
(3) Put the unit into the PLAY mode and press the REW button. Immediately check that the torque reading of the S Reel Table meets the required specification.
Spec. : 17 to 23 g.cm

Adjustment procedure:

(1) If the readings do not meet the required specifications, replace each Reel Table Assembly.

7-3-5. FWD BACK TENSION ADJUSTMENT

Tools: Mode Selector (Ref. No. J-13)
Tension Measurement Reel
(Ref. No. J-7)
Dial Tension Gauge (Ref. No. J-6)

Mode: Press the L-mode select button of the Mode Selector and set to the LOADING END Press the M-mode select button and set to the FWD mode.

Check Procedure:

(1) Remove the Cassette-up Compartment referring to Section 2-13.

(2) Press the L-mode select button of the Mode Selector and set to the LOADING END mode. Press the M-mode select button and set to the FWD mode.

(3) Loosen the fixing screw and move the Band Adjustment Plate in the direction of the arrow A. Check the possible movement range θ of the No. 1 Guide.

(4) Tighten the fixing screw where the No. 1 Guide Cap is positioned at one-third of θ.

(5) Set the Tension Measurement Reel on the S Reel Table and trail the tape along the No. 1 Guide, No. 2 Guide, No. 3 Guide, IP Roller Guide and Drum.

(6) Put the Dial Tension Geauge at the end of the tape. Pull out the Dial Tension Gauge at a contact speed approx. 15cm/sec. in the direction of the arrow B. At this time, check that this reading meets the required specification.

Spec. : 12 to 14 g

Adjustment Procudure:

(1) If the reading do not meet the required specification, change the position of the tension spring which is hooked to the Tension Regulator Spring Hook Assembly.
. more than the Spec. :
the direction of the arrow C
. less than the Spec. :
the direction of the arrow D

NOTE:

When replacing the parts as follows, perform the FWD Back Tension Adjustment.
. Tension Regulator Band Assembly
. S Reel Table Assembly
. Entrance Guide (P) Assembly

When replacing these parts, perform the free running in the FWD mode for two minutes and then adjust the FWD Back Tension.

Adjustment Procudure:

(1) Install the Cassette-up Compartment Assembly with Removal Steps Section 2-13 in reverse order.

(2) Install the Mechanical Deck with Removal Steps Section 2-5 in reverse order.

(3) Insert the cassette tape in the unit and perform the FWD running for two minutes.

(4) Eject the cassette tape.

(5) Remove the Mechanical Deck from the unit referring to Section 2-5.

(6) Perform the FWD Back Tension Adjustment referring to Section 7-3-5.

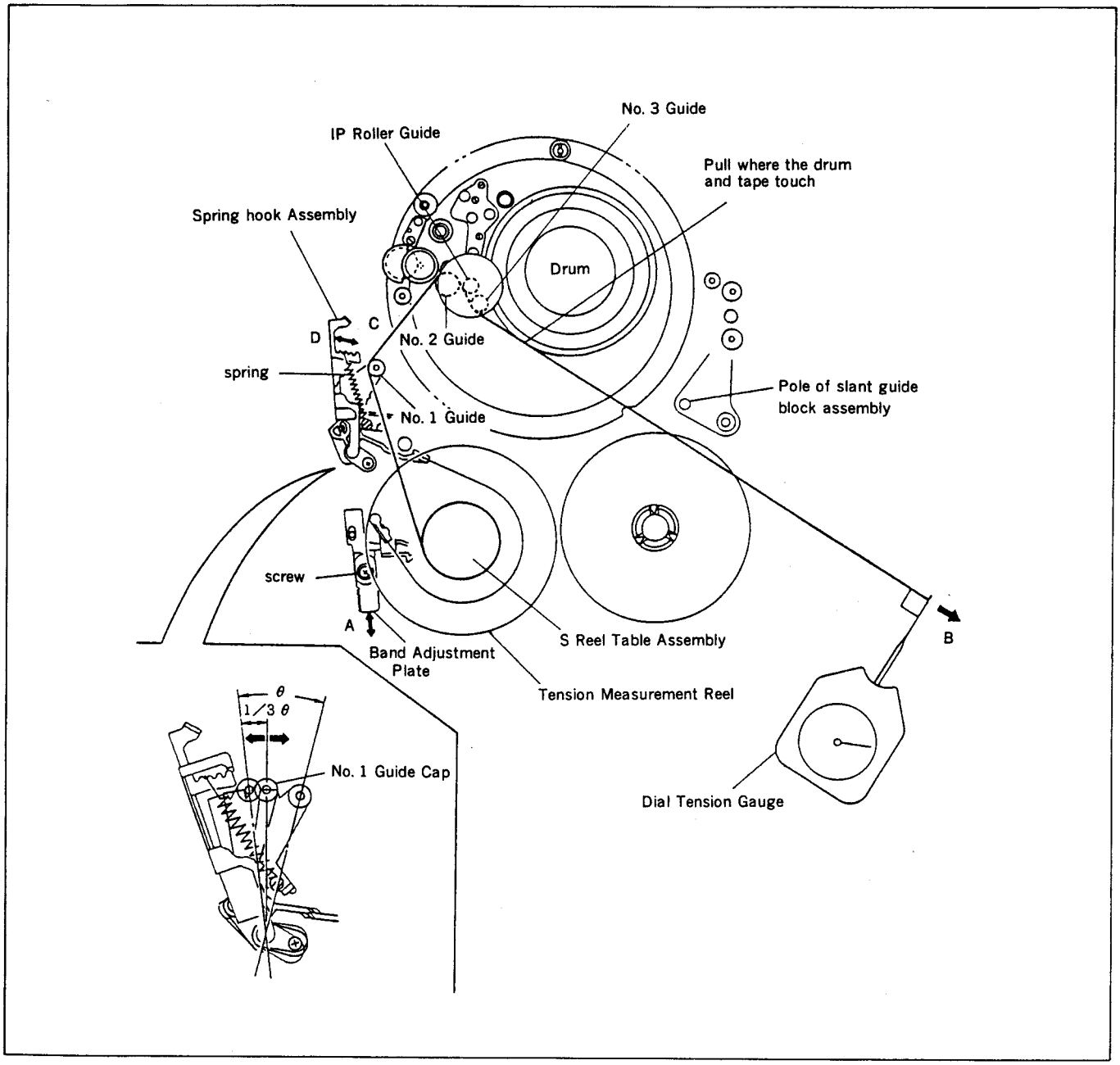
No. 3 Guide
IP Roller Guide
Pull where the drum
and tape touch
Spring hook Assembly
Drum
D
C
No. 2 Guide
spring
Pole of slant guide
block assembly
No. 1 Guide
screw
A
B
S Reel Table Assembly
Band Adjustment
Plate
Tension Measurement Reel
θ
1/3 θ
No. 1 Guide Cap
Dial Tension Gauge

7-4. TAPE PATH ADJUSTMENT

After check that the Electrical Adjustments (Sections 8) are completed, perform this adjustment.

Alignment Information

Track Shift Tool

The 8 mm Video System employs a high precision tracking ATF (Auto Track Finding) system which instantaneously controls the tape running speed with four kinds of pilot signals. In this way, the Tracking Adjustment Knob is unnecessary and it is possible to trace with accuracy. On the other hand, the adjustment of the Tape Path System was difficult in the ATF system. It was impossible to adjust perfectly because the ATF system automatically corrected even it small miss-tracking occurs. Then the Track Shift Tool (Ref. No. J-14) is used in the adjustment of Tape Path System. The Track Shift Tool can forcibly release the ATF system and can easly adjust the Tape Path System by setting the tracking amout (track shift) manually.

7-4-1. CONNECTION OF THE TRACK SHIFT TOOL

Use the connection cords (Ref. No. J-15 and J-16) for connection. Connect the Track Shift Tool and the unit as shown in figure 1.

. RF/SWP connector ...
  to CN004 on the FR-40 Board

. CTL connector ...
  to CN906 on the SE-10 Board

(Please refer to operation manual of the Track Shift Tool for details.)

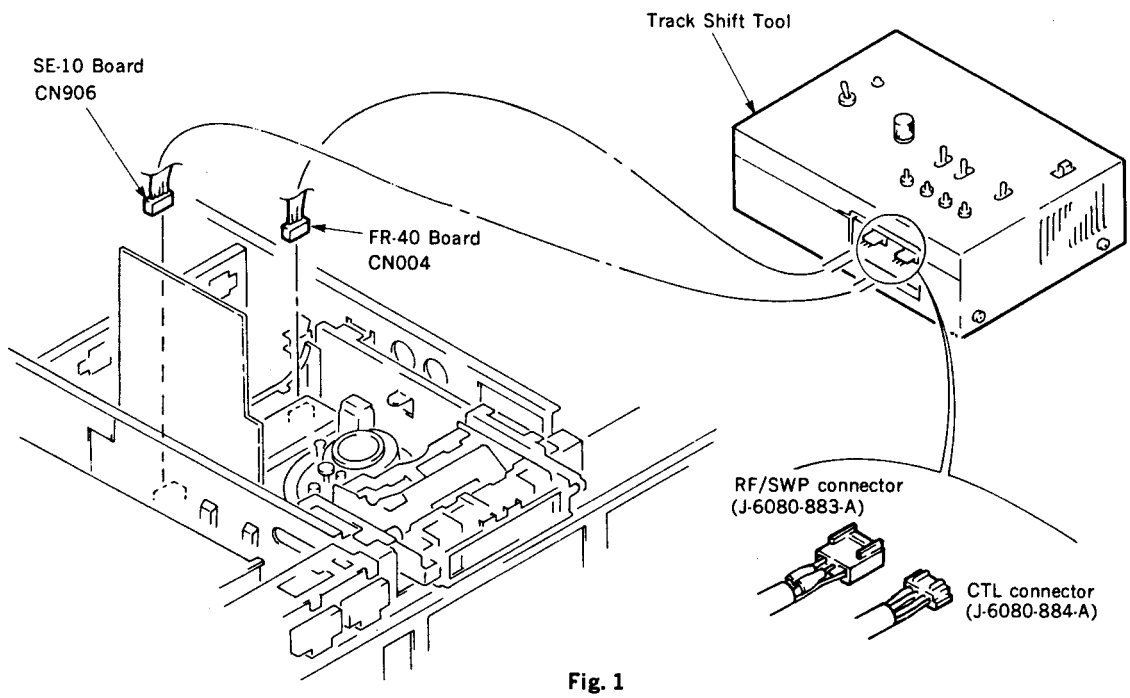

Fig. 1

[Designated Connecting Cord]

. RF/SWP connector connection cord
(Part No. J-6080-883-A)

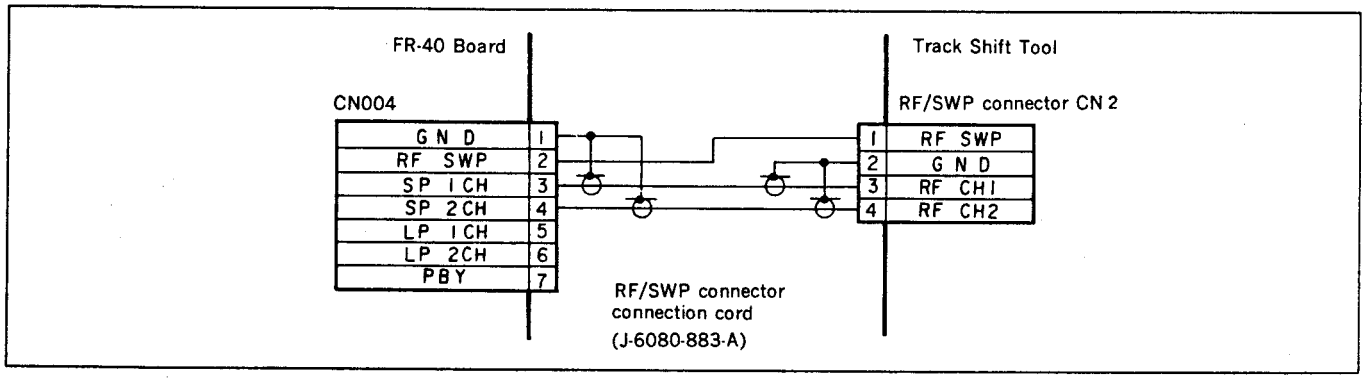

. CTL connector connection cord
(Part No. J-6080-884-A)

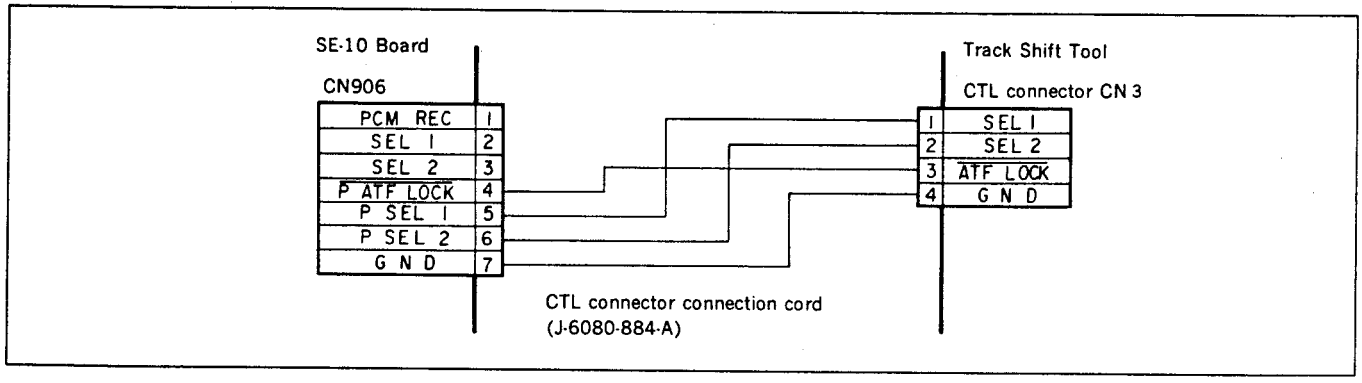

[Setting of the Switches]

SEL switch

When performing the track shift, set the switch to ON. When setting to OFF, the unit side controls.

PATTERN swich

Set to EV side.

ATF ADJ

Set to OFF side.

When adjusting EVO-9500, the other switches are not used.

7-4-2. PREPARATION FOR ADJUSTMENT

Tools: Track Shift Tool (Ref. No. J-14)
RF/SWP connector (Ref. No. J-15)
CTL connector (Ref. No. J-16)
Oscilloscope
Alignment tape for tracking (WR5-1NP) (Ref. No. J-5)

(1) Clean the tape path surface (the individual tape guides, drum, capstan shaft and pinch roller).

(2) Connection of the oscilloscope
1CH: CH2 checking pin of the Track Shift Tool
EXT TRIG:RF SWP checking pin of the Track Shift Tool

(3) Set the SEL switch of the Track Shift Tool to OFF and play back the alignment tape for tracking (WR5-1NP). Check that the RF waveforms of both entrance and exit sides are flat. (fig. 1 ⓐ) If the RF waveforms of both sides are not flat, adjust them as follows.
. In case of the RF waveform at the entrance side is not flat. (fig. 1 ⓑ)
... Perform entrance Side Adjustment referring to Section 7-4-4.
. In case of the RF wavefrom at the exit side is not flat. (fig. 1 ⓒ)
... Perform Exit Side Adjustment referring to Section 7-4-5.

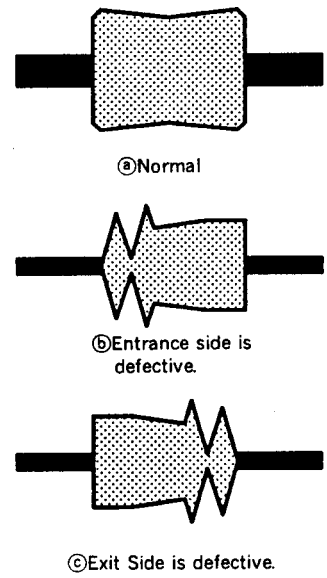

Fig. 1

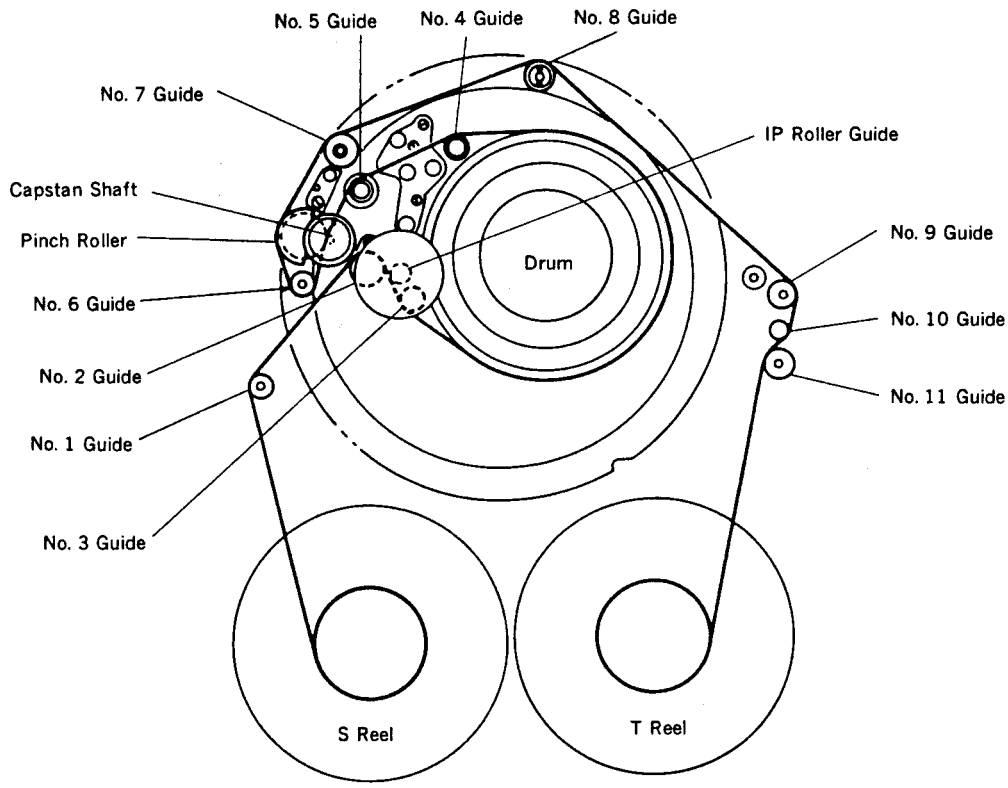

Fig. 2 Tape Guide Arrangement Diagram

7-4-3. TAPE PATH SYSTEM ADJUSTMENT TABLE

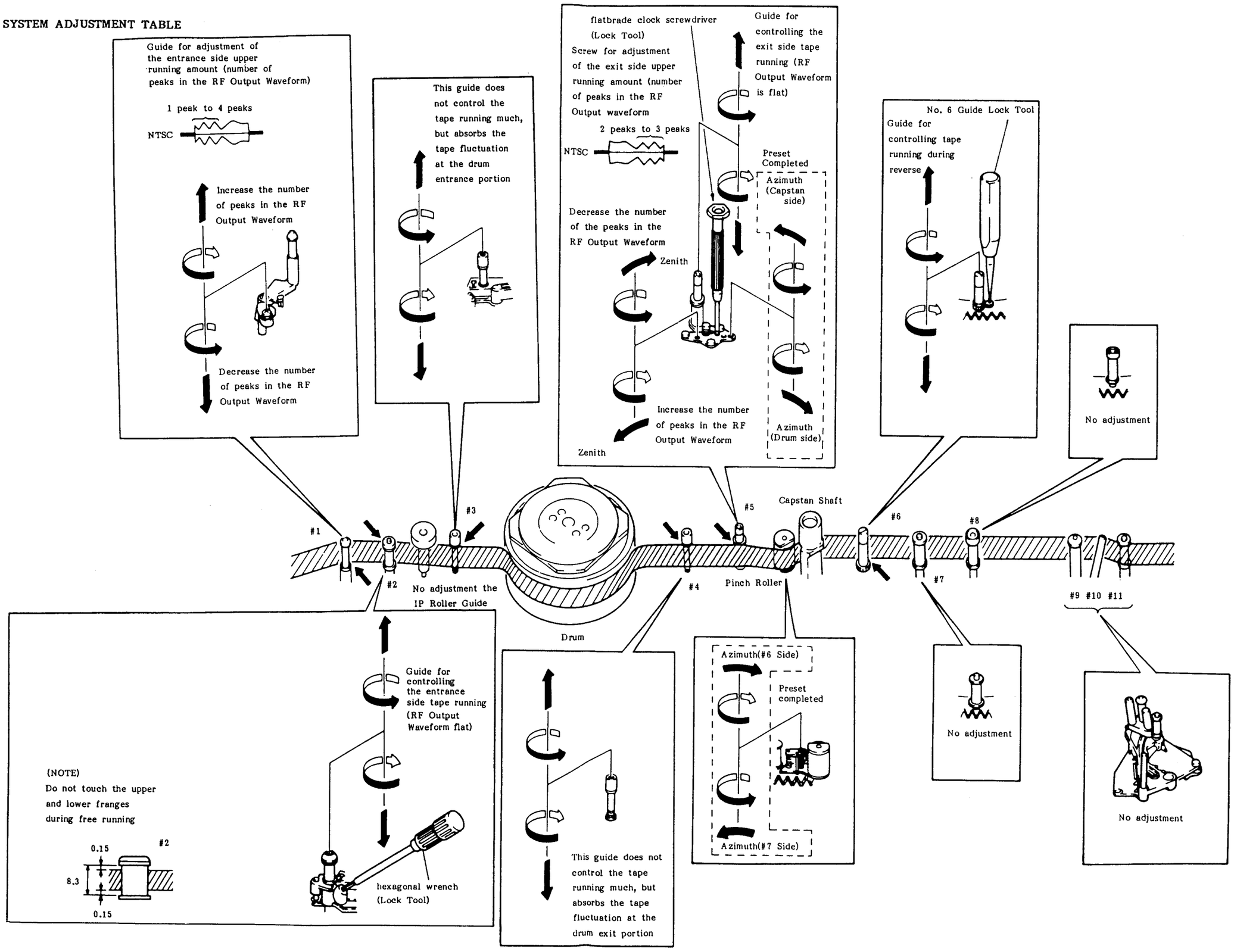

7-4-4. Tape Entrance Side Adjustment

Flow Chart of Adjustment

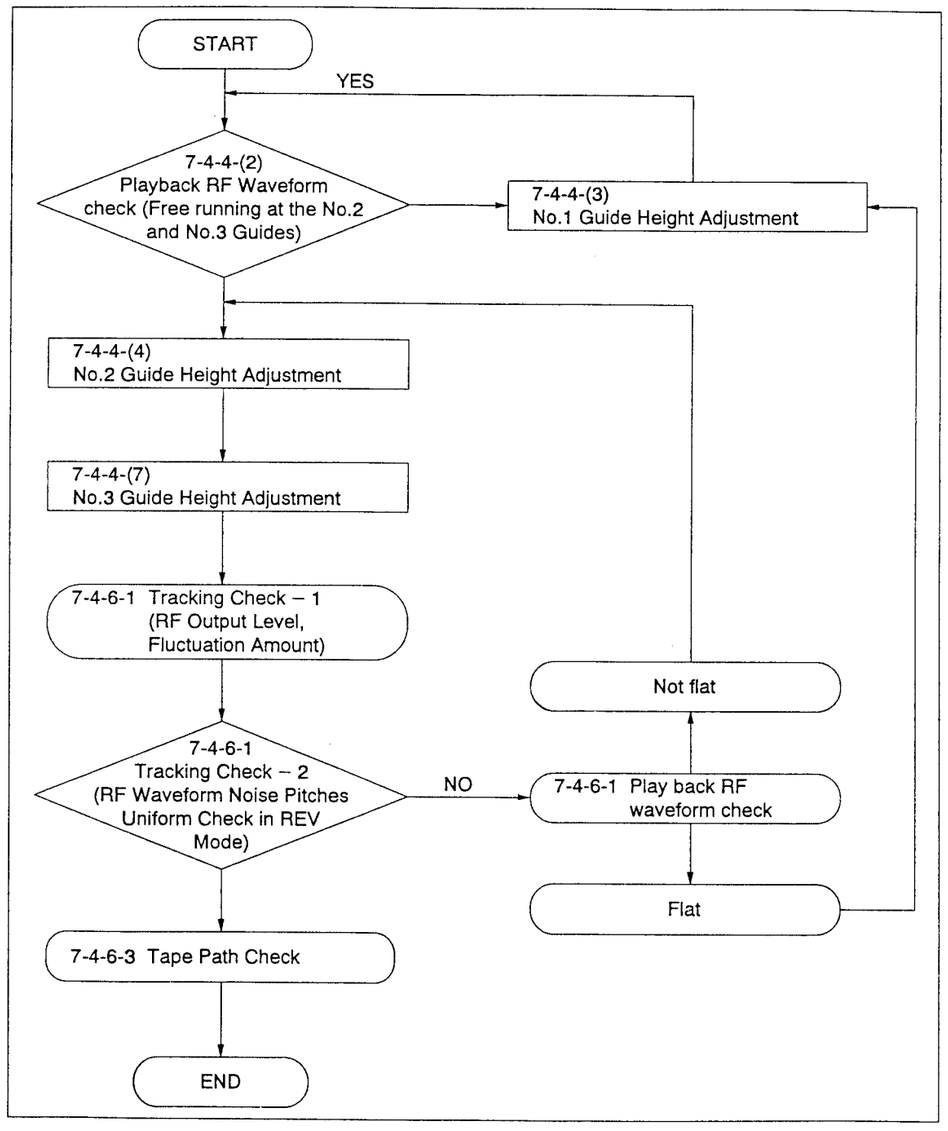

Mode: Play back the alignment tape

Tools: Alignment tape for tracking (WR5-1NP) (Ref. No. J-5)
Oscilloscope
Track Shift Tool (Ref. No. J-14)
RF/SWP connector (Ref. No. J-15)
CTL connector (Ref. No. J-16)
Hexagonal screwdriver (across flat has 0.89 mm) (Ref. No J-17)
Small adjustment mirror (Ref. No. J-4)

Preparation:

(i) Remove the Top Plate referring to Section 2-1.

(ii) Open the MB-19 Board referring to Section 2-8.

(iii) Connect the Track Shift Tool and oscilloscope to the unit referring to Sections 7-4-1 and 7-4-2.

(iv) Play back the alignment tape.

Procedure:

(1) Remove the Fly Wheel referring to Section 7-2-1.

(2) Loosen the No. 2 Guide Lock Screw and turn the No. 2 and No. 3 Guides counterclockwise to free the tape path at the entrance side. (fig. 1 and 2)

Note: The space between upper and lower flanges of the No. 2 Guide is narrow. Therefore, then check that the tape is not touch the upper and lower flanges. If loosen the No. 2 Guide too much, the tape touches the lower flange and the RF waveform at the entrance side exceeds the original free waveform.

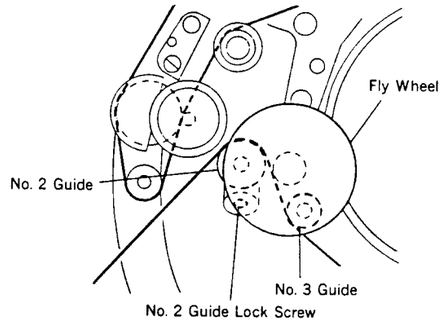

Fig. 1

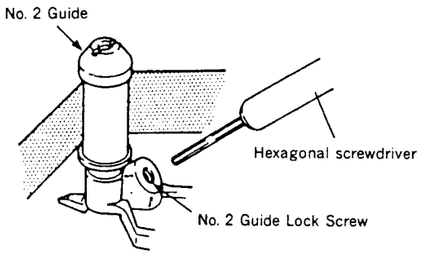

Fig. 2

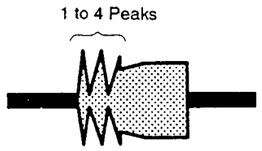

Fig. 3

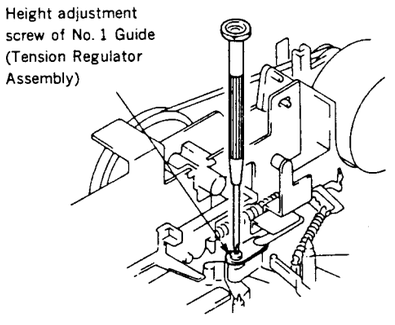

Fig. 4

(3) Check that the RF waveform at the entrance side has 1 to 4 peaks in this condition. If not, adjust as follows. (fig. 3)

. less than 1 peak

Turn and adjust the height adjustment screw of the No. 1 Guide (Tension Regulator Arm Assembly) clockwise 90 degrees step. (fig. 4)

. more than 4 peaks

Turn and adjust the height adjustment screw counterclockwise 90 degrees step. (fig. 4)

(4) Turn slowly the No. 2 Guide clockwise so that flatten the waveform at the entrance side. (fig. 5)

Note: At this time, do not turn the No. 2 Guide too much.

(5) Set the SEL switch of the Track Shift Tool to ON. Turn the Track Shift Knob and set the amplitude of the RF waveform to two-third position. (fig. 6)

(6) Turn the No. 2 Guide and raise the entrance side waveform sightly. (fig. 7)

(7) Flatten the waveform with the No. 3 Guide. (fig. 8)

(8) Tighten the lock screw of the No. 2 Guide. (fig. 2)

(9) Smear locking compound to the No. 1 Guide Height Adjustment Screw and top porsion of the No. 3 Guide.

(10) Install the Fly Wheel referring to Section 7-2-1.

Note: After adjustment, perform Check After Adjustment referring to Section 7-4-6.

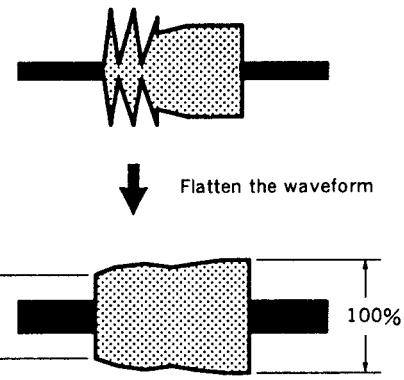

Fig. 5

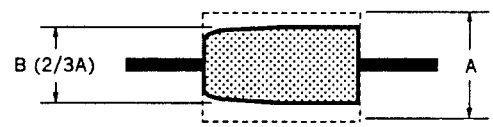

Fig. 6

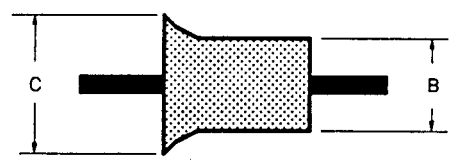

C=1.15B to 1.25B

Fig. 7

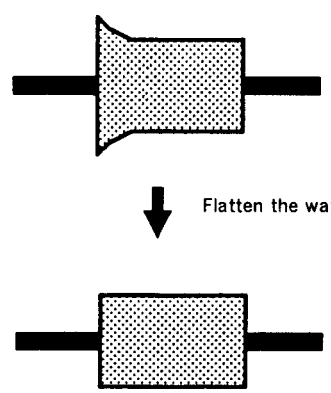

Fig. 8

7-4-5. Tape Exit Side Adjustment

Flow Chart of Adjustment

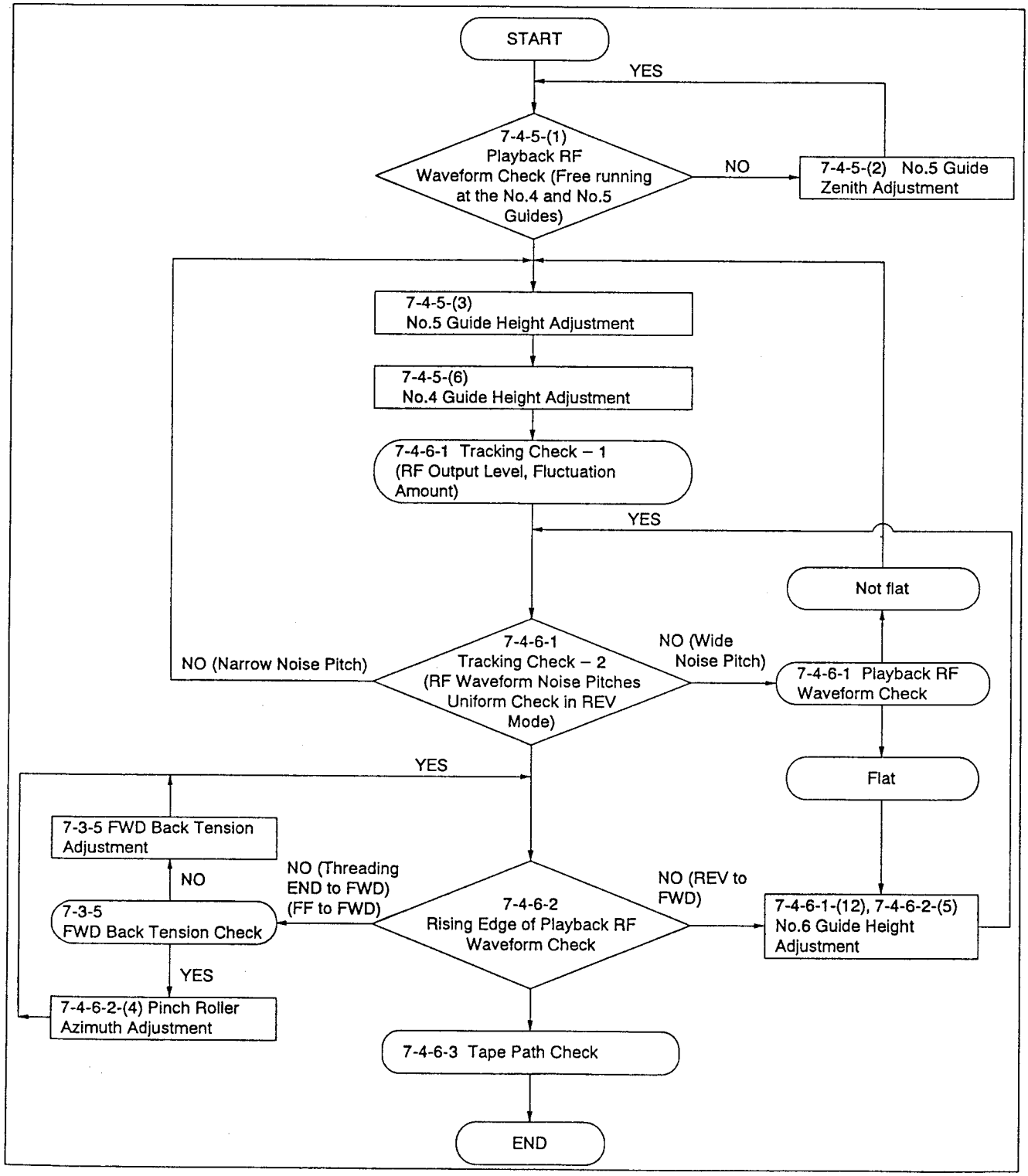

Mode: Play back the alignment tape

Tools: Alignment tape for tracking (WR5-1NP) (Ref. No. J-5)
Oscilloscope
Track Shift Tool (Ref. No. J-14)
RF/SWP connector (Ref. No. J-15)
CTL connector (Ref. No. J-16)
Hexagonal screwdreiver (across flat has 0.89 mm) (Ref. No. J-17)
Small adjustment mirror (Ref. No. J-4)

Preparation:

(i) Remove the Top Plate referring to Section 2-1.

(ii) Open the MB-19 board referring to Section 2-8.

(iii) Connect the Track Shift Tool and oscilloscope to the unit referring to Sections 7-4-1 and 7-4-2.

(iv) Play back the alignment tape.

Procedure:

(1) Turn the No. 4 and No. 5 Guides counterclockwise to free the tape path at the exit side. (fig. 1)

Note: If the No. 5 Guide nut is not loosen because of locking compound, dissolve locking compound with alcohol. Check that the tape does not touch the lower flange of the No. 5 Guide in free running.

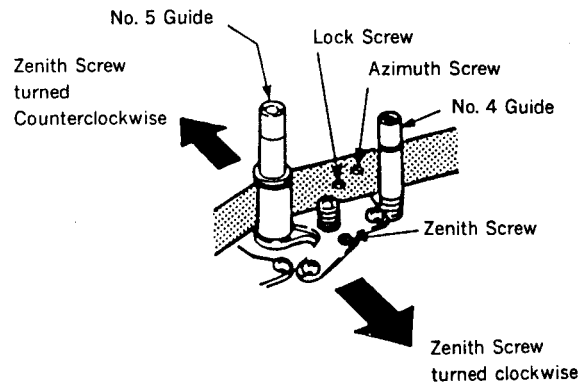

Fig. 1

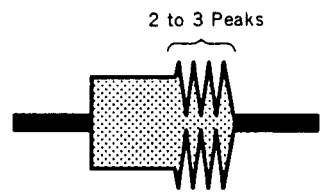

Fig. 2

(2) Check that the RF waveform at the exit side has 2 to 3 peaks in this condition. If not, adjust as follows. (fig. 2)

. Turn and loosen the lock screw counterclockwise.

. less than 2 peaks
Turn and adjust slowly the zenith screw clockwise 45 degrees step.

. more than 3 peaks
Turn and adjust slowly the zenith screw of the No. 5 Guide counterclockwise 45 degrees step.

After adjustment, tighten the lock screw clockwise.(fig. 1)

Note: If tighten the lock screw too strongly, the waveform will change. Tighten suitably the lock screw. Never turn the azimuth screw of the No. 5 Guide.

(3) Turn the No. 5 Guide clockwise and flatten the RF waveform at the exit side. (fig. 3)

Note: At this time, the waveform reaction is slow against the nut rotation. After checking that the waveform variation is stabilized, turn the nut more.

(4) Set the SEL switch of the Track Shift Tool to ON. Turn the Track Shift Knob and set the amplitude of the RF waveform to two-third position. (fig. 4)

(5) Turn the No. 5 Guide and raise the exit side waveform sightly. (fig. 5)

(6) Turn the No. 4 Guide and flatten the waveform. (fig. 6)

(7) Smear locking compound to the lock screw, zenith screw and top portions of the No. 4 Guide and No. 5 Guide.

Note: After adjustment, perform Check After Adjustment referring to Section 7-4-6.

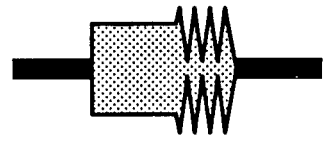

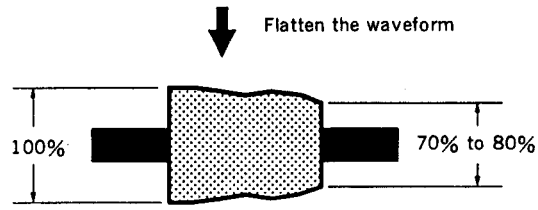

Fig. 3

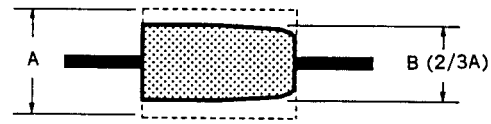

Fig. 4

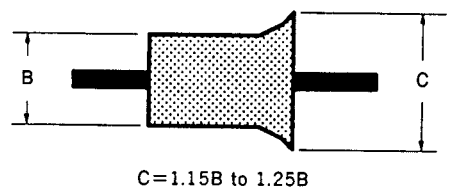

Fig. 5

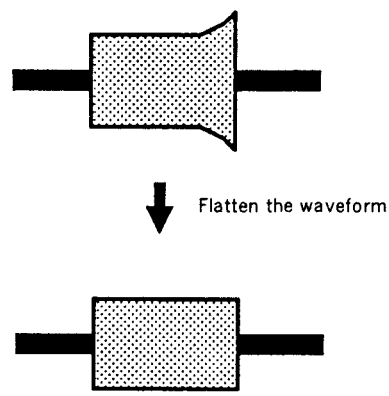

Fig. 6

7-4-6. CHECK AFTER ADJUSTMENT

Tool: No. 6 Guide Lock Screwdriver (Ref. No. J-10)
Alignment tape for tracking (WR5-1NP) (Ref. No. J-5)

1. Video Tracking Check

(1) Play back the alignment tape for tracking.

(2) Set the SEL switch of the Track Shift Tool to ON. Turn the Track Shift Knob and set the amplitude of the RF waveform to two-third position. (fig. 1)

(3) In this time, check that the amplitude minimum value (E MIN) of the RF waveform is more than 75% of maximum value (E MAX). (fig. 2)

(4) In this time, check that the fluctuation amount of th RF waveform at entrance and exit sides meet the reguired specification as shown in figure. 3.

(5) Set the SEL switch of the Track Shift Tool to OFF.

(6) Set to the REV mode and check that the noise pitches of the waveform are uniform. (fig. 4) If not, adjust as follows.

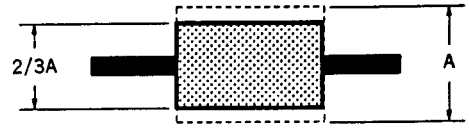

Fig. 1

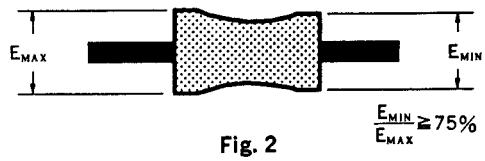

Fig. 2

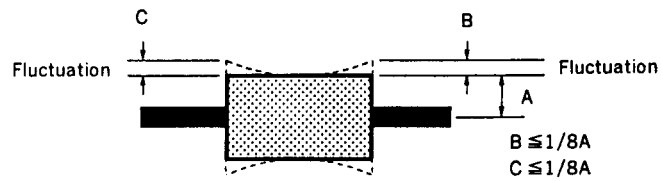

Fig. 3

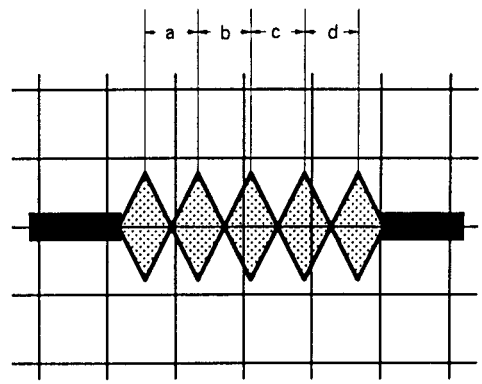

Fig. 4

When the Noise pitch is narrow at the entrance side (upper of screen). (fig. 5)

(7) Check that the RF waveform is flat in the PLAY mode.

(8) Perform the height adjustment of the No. 1 Guide referring to Section 7-4-4.

Note: After adjustment, perform the Tracking Check referring to Section 7-4-6-1.

When the RF waveform is not flat.

(9) Perform the height adjustment of the No. 2 and No. 3 Guides referring to Section 7-4-4.

Note: After adjustment, perform the Tracking Check referring to Section 7-4-6-1.

When the noise pitch is narrow at the exit side (lower of screen). (fig. 6)

(10) Set to PLAY mode and perform the height adjustment of the No. 4 and No. 5 Guides referring to Section 7-4-5. After adjustment, perform the Tracking Check referring to Section 7-4-6-1 and check that it meet the required specification.

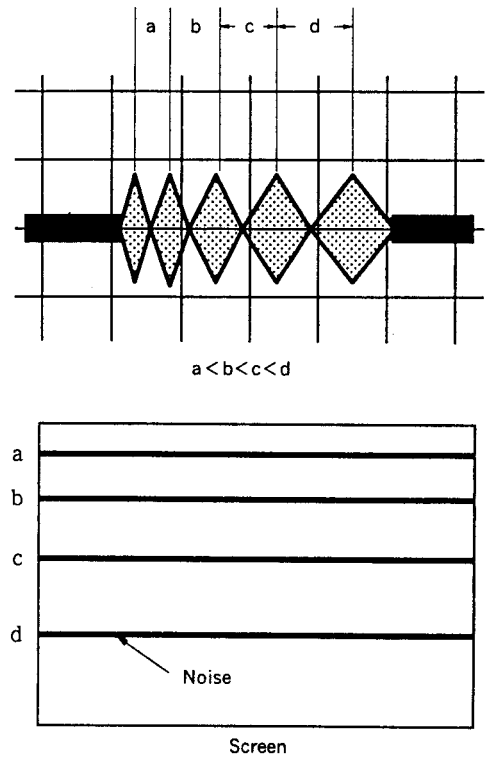

Fig. 5

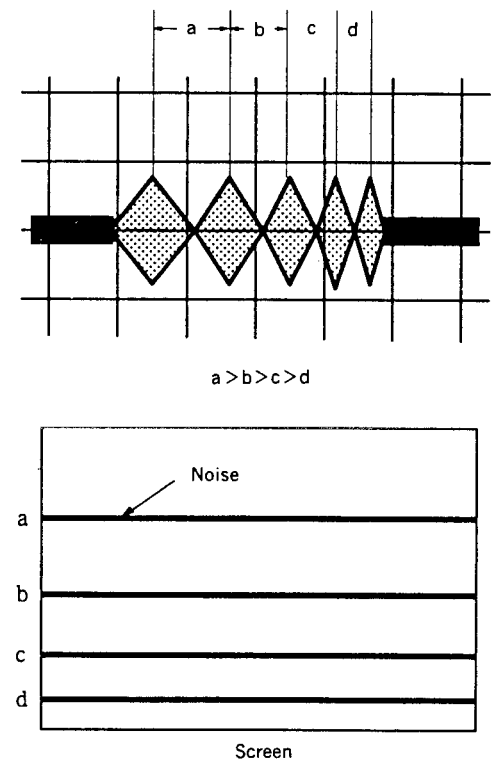

Fig. 6

When the noise pitch is wide at the exit side (lower of screen). (fig. 7)

(11) Set to PLAY mode and check that the RF waveform is flat.

(12) Turn and loosen the Guide Lower Gear counterclockwise with the No. 6 guide lock tool. (fig. 8)

(13) Turn the No. 6 Guide and perform the height adjustment.

Note: At this time, if the No. 6 Guide is raised too much, the wrinkles may occur between the Capstan Shaft and No. 5 Guide (A portion). Check that the wrinkes are not occur. (fig. 9)

(14) Turn and *lock the Guide Lower Gear clockwise with the N0. 6 guide lock tool.

*Touch the Guide Lower Gear against the lower flange of the No. 6 Guide and turn it more about 10 degrees.

Note: After adjustment, perform the Tracking Check referring to Section 7-4-6-1.

When the waveform is not flat.

(15) Perform the height adjustment of the No. 4 and No. 5 Guides referring to Section 7-4-5.

Note: After adjustment, perform the Tracking Check referring to Section 7-4-6-1.

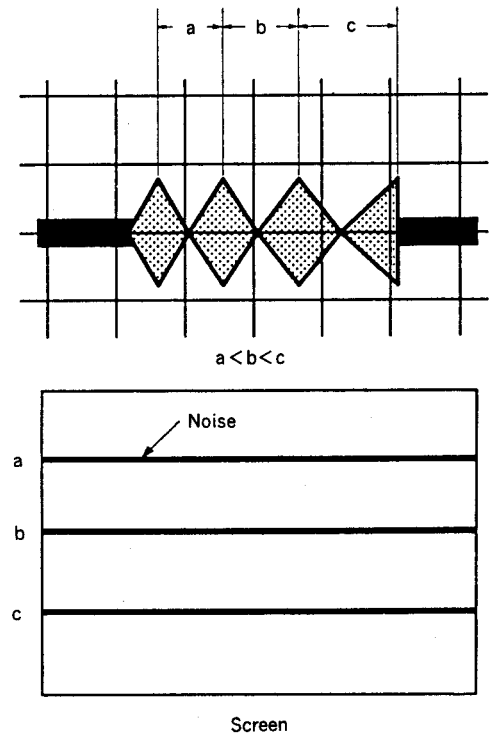

Fig. 7

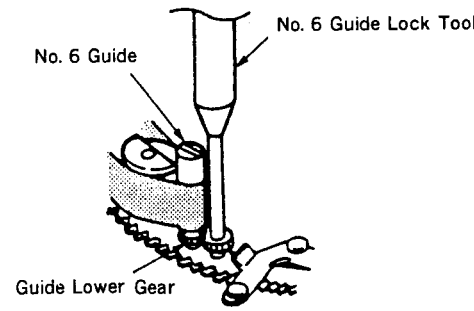

Fig. 8

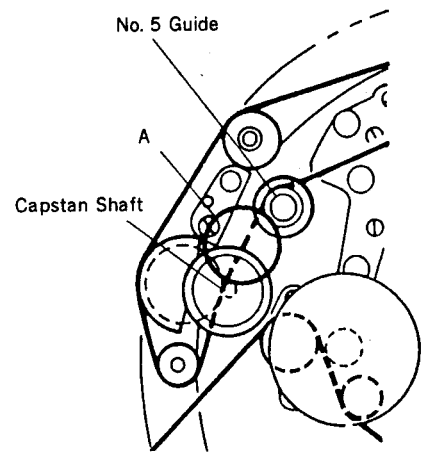

Fig. 9

2. Rising Edge of Waveform Check

(1) Check that the RF waveform rises horizontally (flat waveform) in playback after threading is completed, playback after CUE/REV or FF mode. If the RF waveform do not rise horizontally (flat waveform), adjust as follows.

In case of the noise occurs at the exit side (lower of screen) at the rising edge of the playback, after threading is completed. (fig. 11)

(2) Check that the FWD Back Tension.

When the FWD Back Tension is too low.

(3) Adjust again referring to FWD Back Tension Adjustment of Section 7-3-5.

When the FWD Back Tension is normal.

(4) While adjusting the waveform at the rising edge of the playback, turn the azimuth screw of the Pinch Roller clockwise about 5 degrees step. Then check the rising edge of waveform.

In case of the noise occurs at the exit side (lower of screen) at the rising edge of the playback after REV mode. (fig. 11)

(5) Turn and loosen the Guide Lower Gear counterclockwise with No. 6 guide lock tool. (fig. 8)

(6) Turn the No. 6 Guide and perform the height adjustment.

Note: At this time, if the No. 6 Guide is raised too much, the wrinkles may occur between the Capstan Shaft and No. 5 Guide(A portion). Check that the wrinkes are not occur. (fig. 9)

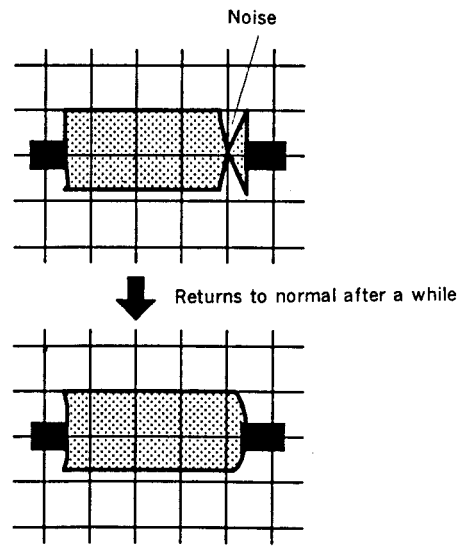

Fig. 11

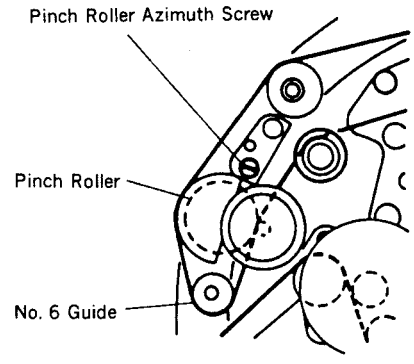

Fig. 12

In case of the noise occurs at the exit side (lower of screen) at the start of the playback after FF mode. (fig. 11)

(7) Check that the FWD Back Tension.

When the FWD Back Tension is too low.

(8) Adjust again referring to FWD Back Tension Adjustment of Section 7-3-5.

When the FWD Back Tension is normal.

(9) While adjusting the waveform at the rising edge of the playback, turn the azimuth screw of the Pinch Roller clockwise about 5 degrees step. Then check the rising edge of waveform. (fig. 12)

Note: After adjustment, be sure to check that waveform again at the rising edge of the playback after threading is completed.

3. Tape Running Check

Check the tape running at the flange of the Guides (shown by arrows) in PLAY and REV modes.

No. 1 Guide No. 2 Guide No. 5 Guide	...	Tape runs in contact with upper or lower flange. If tape curl exist, less than 0.3mm at the tape curl is acceptable.
No. 3 Guide No. 6 Guide	...	Tape runs in contact with upper or lower flange without curl.
No. 4 Guide	...	Tape runs in contact with upper flange. If tape curl exists, less than 0.5mm of tape curl is acceptable.

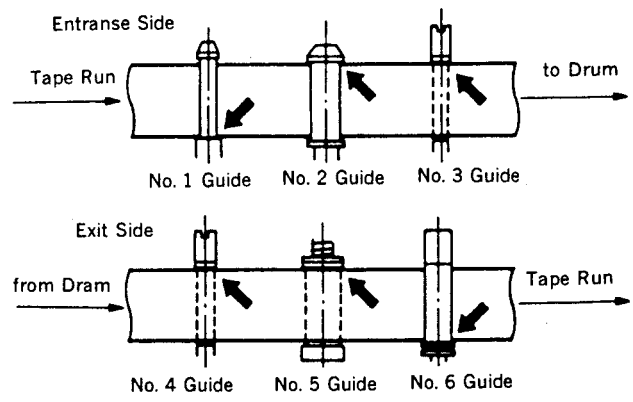

Fig. 13

SECTION 8
ELECTRICAL ADJUSTMENT

8-1. POWER SUPPLY ALIGNMENT

8-1-1. Equipment Required
- Digital voltmeter

8-1-2. +5V Adjustment

Machine condition for adjustment	Specifications	Adjustments
• STANDBY mode	CN101-2/IF-20 (J-1) 5.4 ± 0.1Vdc	⊘RV203/ POWER BLOCK (B-1)

8-1-3. REG +5V Adjustment

Machine condition for adjustment	Specifications	Adjustments
• E-E mode	CN101-5/IF-20 (J-1) 5.2 ± 0.1Vdc	⊘RV202/ POWER BLOCK (D-1)

8-1-4. REG +9V Adjustment

Machine condition for adjustment	Specifications	Adjustments
• E-E mode	CN101-10/IF-20 (J-1) 9.0 ± 0.1Vdc	⊘RV201/ POWER BLOCK (D-1)

8-2. SERVO SYSTEM ALIGNMENT

8-2-1. Equipment Required

- Oscilloscope
- Frequency counter
- Digital voltmeter
- Alignment tape

Name (Part No.)	REC mode	Tape Type	Tape Speed	Contents	
				Video Area	PCM Area
SP operation check WR5-8NSE (8-967-995-43)	Hi8	ME	SP	VIDEO SIGNAL Color-bar 4 min. Monoscope 4 min. AUDIO SIGNAL (AFM) 400 Hz 60% mod.	AUDIO SIGNAL (PCM) 400 Hz 20 min.
LP operation check WR5-8NLE (8-967-995-52)	Hi8	ME	LP	VIDEO SIGNAL Color-bar 4 min. Monoscope 4 min. AUDIO SIGNAL (AFM) 400 Hz 60% mod.	AUDIO SIGNAL (PCM) 400 Hz 40 min.

- Empty cassette (See below.)

1. Draw out a tape and cut it.
2. Cover two holes on both side of the cassette with a vinyl tape.

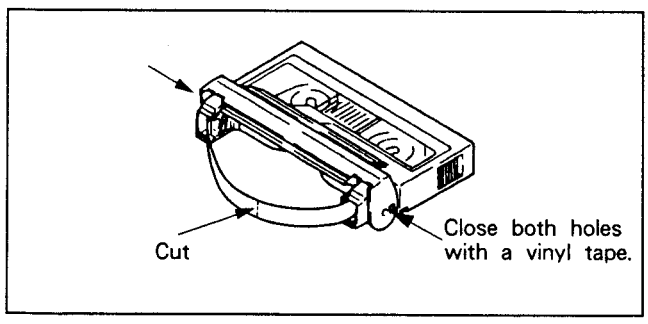

8-2-2. DS Clock Check

Machine condition for adjustment	Specifications	Adjustments
• VIDEO IN: color-bar signal • STOP mode	TP107/SE-10 (C-5) 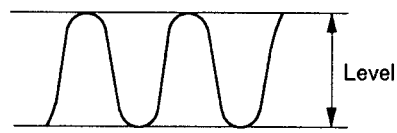 Level=more than 2.5 Vp-p Frequency=3578756 ± 300 Hz	

8-2-3. Capstan FG Duty Adjustment

Remove the Bottom Plate and open the HK-4 Board for this adjustment. If it does not meet the specification, remove the mechanical deck and adjust again.

Machine condition for adjustment	Specifications	Adjustments
• Connect each TP001 AND TP002 on the SE-10 board to ground with jumper wires. • Insert the empty cassette tape and put the machine into the play back mode. • After adjustment, remove the jumper wires.	TP105/SE-10 (D-4) 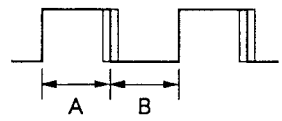 A ≒ B	⊘RV801/MD-23 (D-3)

8-2-4. Reel FG Adjustment

Remove the mechanical deck for this adjustment.
Connect only CN907 on the SE-10 Board.

Machine condition for adjustment	Specifications	Adjustments
• Play back the alignment tape WR5-8NLE.	TP901/MD-23 (G-1) 21 ± 1 Hz	⊘RV901/MD-23 (G-1)
• Perform confirmation while playing back the alignment tape WR5-8NLE.	TP902/MD-23 (E-1) 1.0 through 1.4Vdc	
• Perform confirmation while playing back the alignment tape WR5-8NLE with CUE (× 9) mode. CUE (× 9): While pressing the PB button, press the FF button on the MB-19 Board.	TP901/MD-23 (G-1) 37 through 50 Hz TP902/MD-23 (E-1) 1.4 through 1.9Vdc	

Note: After adjustment, install the mechanical deck.

8-2-5. Drum Free Speed Adjustment

Machine condition for adjustment	Specifications	Adjustments
• VIDEO IN: No signal • Use the Hi8 MP tape. • REC mode	TP101/SE-10 (D-6) 1.9 ± 0.1Vdc	⊘RV102/SE-10 (E-6)

8-2-6. Capstan Free Speed Adjustment

Machine condition for adjustment	Specifications	Adjustments
Step 1 (SP mode) • Connect TP201/SE-10 (H-3) to ground with electrolytic capacitor (100 µF/10V) during STOP mode. 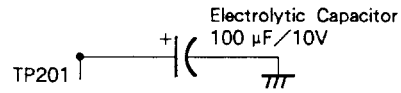 • Connect TP002/SE-10 (D-6) to ground with jumper wire during STOP mode. • Play back the alignment tape WR5-8NSE. • After adjustment, remove the jumper wire and capacitor.	TP105/SE-10 (D-4) 960 ± 1 Hz	⊘ RV106/SE-10 (D-5)
Step 2 (LP mode) • Connect TP201/SE-10 (H-3) to ground with electrolytic capacitor (100 µF/10V) during STOP mode. 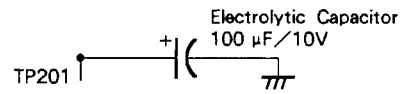 • Connect TP002/SE-10 (D-6) to ground with jumper wire during STOP mode. • Connect pin 4 of CN901/SE-10 (A-5) to ground with jumper wire during STOP mode. • Play back the alignment tape WR5-8NSE. • After adjustment, remove the jumper wire and capacitor.	TP105/SE-10 (D-4) 480 ± 1 Hz	⊘ RV105/SE-10 (D-5)

8-2-7. Switching Position Adjustment

Machine condition for adjustment	Specifications	Adjustments
• Play back the color bar signal portion of the alignment tape WR5-8NSE.	CH-1: TP701/HK-4(H-2) CH-2: TP103/SE-10 (F-3) 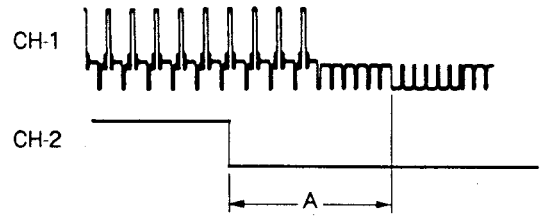 A=6.5 ± 0.3H	⊘ RV101/SE-10 (C-6) Trigger: TP301/SE-10 (F-3)

8-2-8. ATF BPF Balance Adjustment

Machine condition for adjustment	Specifications	Adjustments
• Connect TP208/SE-10 (H-3) to ground with jumper wire. • VIDEO IN : color-bar signal • Preform the self-recording /play back with a Hi8 ME tape. • After adjustment, remove the jumper wire.	CH-1: IC201-12/SE-10 (G-4) CH-2: IC201-11/SE-10 (G-4) 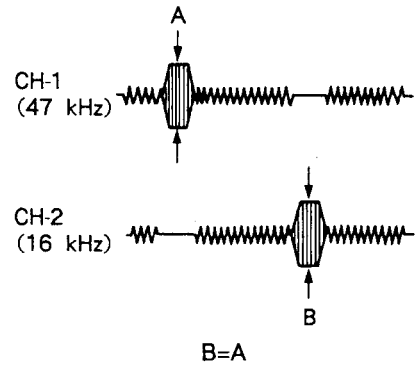	⊘RV201/SE-10 (G-4)

Note: It is difficult to connect the IC201-11 and IC201-12.
The substitutive positions of these pins described below.

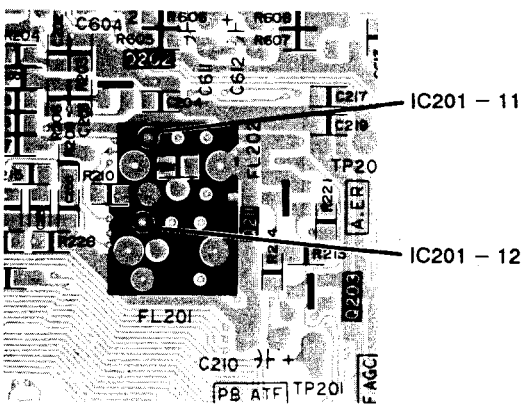

* Open the SE-10 board.

8-2-9. STILL Adjustment

Machine condition for adjustment	Specifications	Adjustments
• VIDEO IN : color-bar signal • Perform the self-recording/play back with a Hi8 ME tape. • Put the unit into the PAUSE mode and measure the pulse width of A portion. • Advance one frame and perform adjustment if the pulse width of A is narrow. If it is wide, advance the frame for one more frame and perform adjustment by observing narrower pulse width.	CH-1: TP103/SE-10 (F-3) CH-2: TP204/SE-10 (F-5) 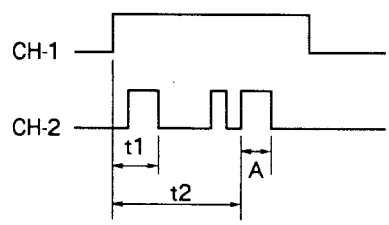 t1=4.0 ± 0.1msec t2=11.4 ± 0.1msec	t1 ⊘RV203/SE-10 (H-3) t2 ⊘RV204/SE-10 (H-3) Trigger: TP103/SE-10 (F-3)

8-2-10. SP Slow Adjustment

Machine condition for adjustment	Specifications	Adjustments
• VIDEO IN : color-bar signal • Using P6-120MPN tape, perform the short recording of the color-bar signal at the end of tape. • Connect TP001/SE-10 (C-2) to ground with jumper wire. • Playback the recorded portion with SLOW (× 1/5 speed) mode. • When the noise appears on the monitor screen, adjust RV104 temporarily. • When the noise appears on the monitor screen, adjust RV104 so that noise at the bottom of the screen disappears. • After adjustment, remove the jumper wire.	CH-1: TP103/SE-10 (F-3) CH-2: TP105/SE-10 (D-4) 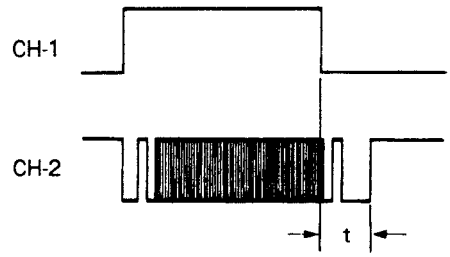 t=minimum	⊘ RV304/SE-10 (E-2) ⊘ RV104/SE-10 (D-5) Trigger: TP302/SE-10 (F-3)

8-2-11. LP Slow Adjustment

Note: This adjustment should be performed after completion of "8-2-10. SP SLOW ADJUSTMENT".

Machine condition for adjustment	Specifications	Adjustments
• Connect pin 4 of CN901/SE-10 (A-5) to ground with jumper wire. • VIDEO IN : color-bar signal • Perform the a short recording of the color-bar signal at the end of P6-120N tape. • Connect TP001/SE-10 (C-2) to ground with jumper wire. • Playback the recorded portion with SLOW (× 1/5 speed). • After adjustment, remove jumper wires.	Adjust RV103 so that the noise at the bottom of the screen disappears.	⊘ RV103/SE-10 (E-5)

8-2-12. SP Slow fH Adjustment

Machine condition for adjustment	Specifications	Adjustments
Step 1 • Perform the short recording of the color-bar signal with a Hi8 ME tape. Play back the recorded portion with SLOW (× 1/30 speed). SLOW (× 1/30 speed): Short-circuit pin 5 of CN901/SE-10 (A-5) to ground for one second with 6.2kΩ resistor.	CH-1: TP103/SE-10 (F-3) CH-2: TP102/SE-10 (D-5) 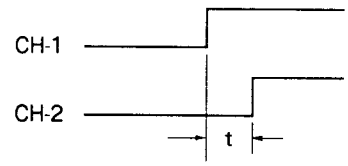 t=580 ± 10 µsec	⊘ RV301/SE-10 (F-1)
Step 2 • Perform the short recording of the color-bar signal with a Hi8 ME tape. Play back the recorded portion with SLOW (× 1/5 speed). SLOW (× 1/5 speed): Press SLOW button or short-circuit pin 5 of CN901/SE-10 (A-5) to ground for one second with 3.6kΩ resistor.	TP301/SE-10 (E-2) 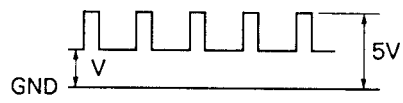 V=3.9 ± 0.1Vdc	⊘ RV303/SE-10 (E-1)

8-2-13. LP Slow fH Adjustment

Machine condition for adjustment	Specifications	Adjustments
• Connect pin 4 of CN901/SE-10 (A-5) to GND with jumper wire. (LP mode) • Perform the short recording of the color-bar signal with a Hi8 ME tape. Play back the recorded portion with SLOW (× 1/5 speed).	CH-1: TP103/SE-10 (F-3) CH-2: TP102/SE-10 (D-5) 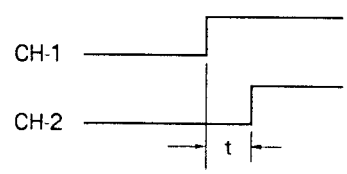 t=580 ± 10 µsec	⊘ RV302/SE-10 (F-2)

8-2-14. Slow Tracking Adjustment

Machine condition for adjustment	Specifications	Adjustments
• Play back the color-bar signal portion of alignment tape WR5-8NSE with SLOW mode. • Turn RV001/FB-169 (J-3) and stops where at the center click position.	W002-10/FB-169 (E-3) 2.5V ± 0.1 Vdc After the adjustment, turn RV001/FB-169 (J-3) and confirm the voltage whether varies.	⊘ RV002/FB-169 (J-3)

8-3. VIDEO SIGNAL SYSTEM ALIGNMENT

8-3-1. Equipment Required

- Oscilloscope
- Frequency counter
- Test signal generator
- Vectorscope
- Vectorscope
- Sweep generator

Name (Part No.)	REC mode	Tape Type	Tape Speed	Contents	
				Video Area	PCM Area
Video freq. resp. WR5-7NE (8-967-995-13)	Hi8	ME	SP	RF sweep 0 to 15 MHz Marker: 2.0 MHz 4.5 MHz 7.0 MHz 8.5 MHz 10.0 MHz	
SP operation check WR5-5NSP (8-967-995-42)	STD	MP	SP	VIDEO SIGNAL Color-bar 4 min. Monoscope 4 min. AUDIO SIGNAL (AFM) 400 Hz 60% mod.	AUDIO SIGNAL (PCM) Monoscope Section 20 Hz 20 sec. 400 Hz 20 sec. 14 kHz 20 sec. Color-Bar Section 1 kHz 4 min.
SP operation check WR5-8NSE (8-967-995-43)	Hi8	ME	SP		AUDIO SIGNAL (PCM) 400 Hz 20 min.
LP operation check WR5-8NLE (8-967-995-52)	Hi8	ME	LP	VIDEO SIGNAL Color-bar 4 min. Monoscope 4 min. AUDIO SIGNAL (AFM) 400 Hz 60% mod.	

8-3-2. SP PB Frequency Response Adjustment

Machine condition for adjustment	Specifications	Adjustments
• Play back the alignment tape WR5-7NE.	CN004-3/FR-40 (A-2) 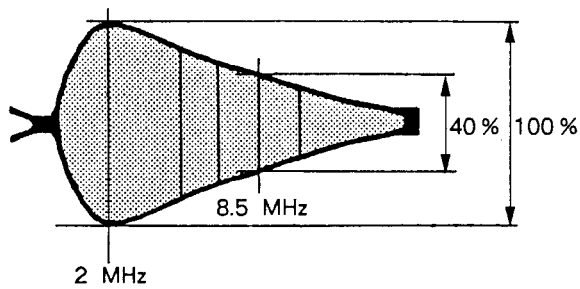 8.5 MHz=40% (in reference to 2 MHz)	⊘ RV004/RP-73 (SP) Trigger: CN004-2/FR-40 (A-2)
	CN004-4/FR-40 (A-2) 8.5 MHz=40% (in reference to 2 MHz)	⊘ RV003/RP-73 (SP) Trigger: CN004-2/FR-40 (A-2)

8-3-3. LP PB Frequency Response Adjustment

Machine condition for adjustment	Specifications	Adjustments
• Connect TP104/SE-10 (D-4) to ground with jumper wire. • Play back the alignment tape WR5-7NE. • After adjustment, remove a jumper wire.	CN004-5/FR-40 (A-2) 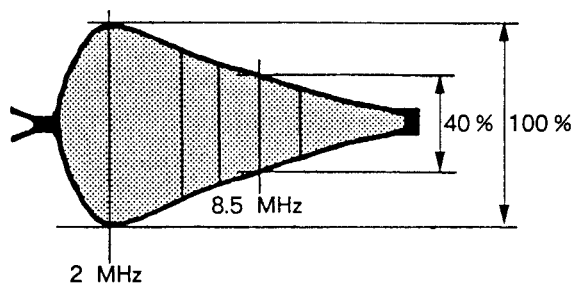 8.5 MHz=40% (in reference to 2 MHz)	⊘ RV004/RP-73 (LP) Trigger: CN004-2/FR-40 (A-2)
	CN004-6/FR-40 (A-2) 8.5 MHz=40% (in reference to 2 MHz)	⊘ RV003/RP-73 (LP) Trigger: CN004-2/FR-40 (A-2)

8-3-4. Flying Erase Confirmation

Machine condition for adjustment	Specifications	Adjustments
• VIDEO IN : color-bar signal • Use a Hi8 ME tape. • REC mode	TP041/FR-40 (C-1) 7.9 ± 0.5 MHz	

8-3-5. SubCarrier Frequency Adjustment

Machine condition for adjustment	Specifications	Adjustments
• VIDEO IN: no signal • PB mode	Q184-collector/HK-4 (F-4) 3579545 ± 30 Hz	⊘ CV601/HK-4 (B-3)

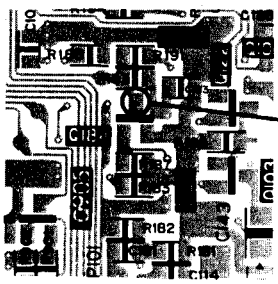

8-3-6. PB C Comb Filter Adjustment

Machine condition for adjustment	Specifications	Adjustments
• Supply the composite color-bar signal (Y=0.5 Vp-p, burst=0.143 Vp-p) to CN911-4/HK-4 (H-2). • E-E mode	IC501-26/HK-4 (B-2) 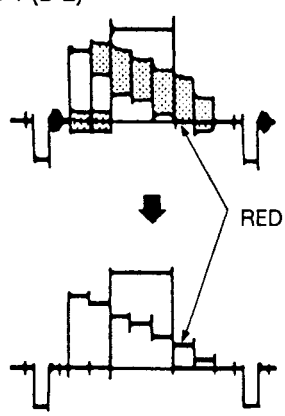 Minimize residual chroma component at RED portion (30 mVp-p or less)	⊘ RV502/HK-4 (A-3) ⊘ LV501/HK-4 (B-3)

8-3-7. SYNC AGC Adjustment

Machine condition for adjustment	Specifications	Adjustments
• VIDEO IN: color-bar signal • E-E mode	TP402/HK-4 (E-3) A=0.50 ± 0.02 Vp-p	⊘ RV302/HK-4 (D-1)

8-3-8. AGC Output Level Adjustment

Machine condition for adjustment	Specifications	Adjustments
• VIDEO IN: color-bar signal • E-E mode	TP301/HK-4 (B-3) 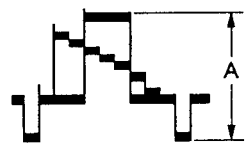 A=0.50 ± 0.02 Vp-p	⊘ RV405/HK-4 (D-3)

8-3-9. Video Output Level Adjustment

Machine condition for adjustment	Specifications	Adjustments
• VIDEO IN: color-bar signal • E-E mode	TP303/HK-4 (E-1) A=1.00 ± 0.05 Vp-p	⊘ RV301/HK-4 (E-1)

8-3-10. STD Mode PB Y Level Adjustment

Machine condition for adjustment	Specifications	Adjustments
• Play back the color-bar signal portion of the alignment tape WR5-5NSP.	TP302/HK-4 (D-3) 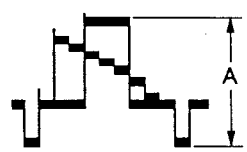 A=0.50 ± 0.02 Vp-p	⊘ RV304/HK-4 (E-2)

8-3-11. PB De-emphasis Adjustment

Machine condition for adjustment	Specifications	Adjustments
• Play back the color-bar signal portion of the alignment tape WR5-5NSP.	TP302/HK-4 (D-3) 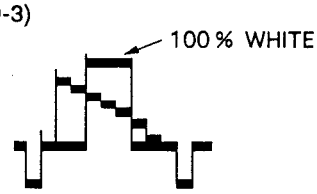 100% white level=makes flat	⊘ RV304/HK-4 (E-2)

8-3-12. Hi8 Mode PB Y Level Adjustment

Machine condition for adjustment	Specifications	Adjustments
• Play back the color-bar signal portion of the alignment tape WR5-8NSE.	TP302/HK-4 (D-3) 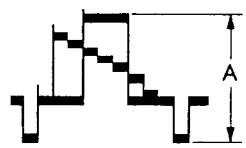 A=0.50 ± 0.02 Vp-p	⊘ RV305/HK-4 (E-2)

8-3-13. STD Mode Y FM Carrier Adjustment

Machine condition for adjustment	Specifications	Adjustments
• VIDEO IN: no signal • Use a P6-MP series tape. • E-E mode	IC401-14/HK-4 (D-2) 4.40 ± 0.02 MHz	⊘ RV402/HK-4 (D-2)

8-3-14. STD Mode Y FM Deviation Adjustment

Machine condition for adjustment	Specifications	Adjustments
• VIDEO IN: color-bar signal • Preform the self-recording/play back with a P6-MP series tape.	TP302/HK-4 (D-3) 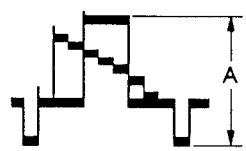 A=0.50 ± 0.02 Vp-p • Repeat recording and play back several times until the level meets the specification. Adjust the RV403 during recording.	⊘ RV403/HK-4 (D-2) When turning in the clockwise direction, the level decreases.

8-3-15. Hi8 Mode Y FM Carrier Adjustment

Machine condition for adjustment	Specifications	Adjustments
• VIDEO IN: no signal • E-E mode	TP401/HK-4 (C-3) 6.00 ± 0.02 MHz	⊘ RV401/HK-4 (D-2)

8-3-16. Hi8 Mode Y FM Deviation Adjustment

Machine condition for adjustment	Specifications	Adjustments
• VIDEO IN: color-bar signal • Preform the self-recording/play back with a Hi8 ME tape.	TP302/HK-4 (D-3) 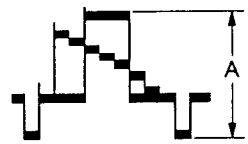 A=0.50 ± 0.02 Vp-p • Repeat recording and play back several times until the level meets the specification. Adjust RV404 during recording.	⊘ RV404/HK-4 (D-2) When turning in the clockwise direction, the level decreases.

8-3-17. 378fH VCO Adjustment

Machine condition for adjustment	Specifications	Adjustments
• VIDEO IN: color-bar signal • E-E mode • Solder the jumper wire to the position described below. Connect the voltmeter at the end of jumper wire. • After adjustment, remove the jumper wire.	IC602-26/HK-4 (B-4) 3.0 ± 0.1Vdc	⊘ RV601/HK-4 (A-4)

Note: It is difficult to connect to 26 pin of IC602 because it is under the oscillator. The substitutive position is described below.

HK-4 Board (A-4)

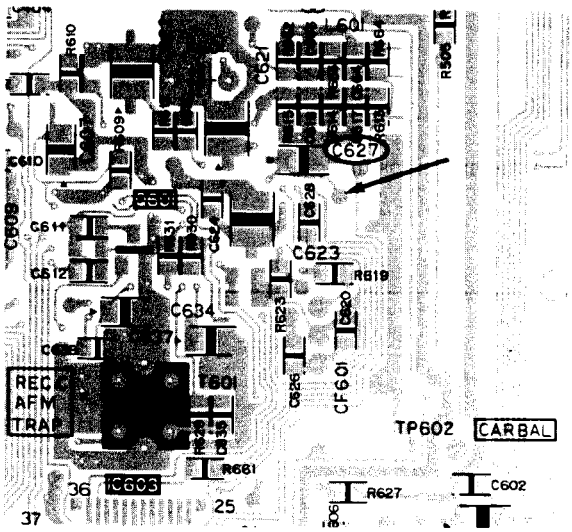

8-3-18. Chroma Emphasis fo Adjustment

Machine condition for adjustment	Specifications	Adjustments
• Connect pin 47 of IC602 to TP902/HK-4 (F-5) via 10 k ohm resistor. • Connect pin 47 of IC602 to ground via 10 k ohm resistor. • VIDEO IN: color-bar signal • E-E mode • After adjustment, remove the resistor.	IC601-11/HK-4 (A-5) 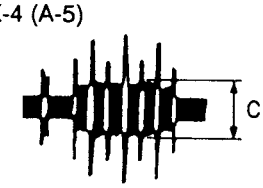 C (chroma component)=minimum	⊘ T602/HK-4 (A-6)

8-3-19. Carrier Balance Adjustment

Machine condition for adjustment	Specifications	Adjustments
• Play back the color-bar signal portion of the alignment tape WR5-8NSE.	TP602/HK-4 (A-5) A (4.32 MHz component)=minimum	⊘ RV602/HK-4 (A-5)

8-3-20. REC Y RF Level Adjustment

Machine condition for adjustment	Specifications	Adjustments
• VIDEO IN: no signal • Use a P6-MP tape • E-E mode	TP201/HK-4 (D-6) 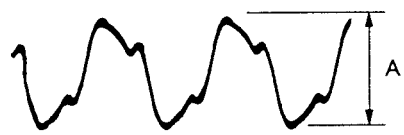 A=0.62 ± 0.02 Vp-p	⊘ RV202/HK-4 (D-5)

8-3-21. REC C RF Level Adjustment

Machine condition for adjustment	Specifications	Adjustments
• Perform following connections. Q211-emitter (D-5) ↔ TP902/HK-4 (F-5) CN101-3 (C-6) ↔ ground Q608-emitter (B-6) ↔ ground • VIDEO IN: color-bar signal • E-E mode • After adjustment, remove the jumper wires.	TP201/HK-4 (D-6) 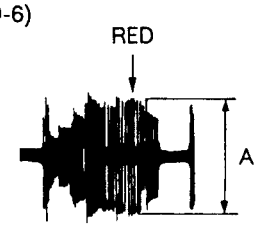 A=100 ± 10m Vp-p	⊘ RV201/HK-4 (C-5)

8-3-22. SP REC Current Adjustment

Machine condition for adjustment	Specifications	Adjustments
• VIDEO IN : 50% white signal • Use a Hi8 ME tape • REC mode	TP001/FR-40 (A-1) 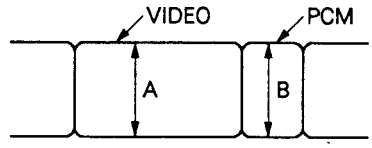 A (VIDEO)=180 ± 10 mV B (PCM)=180 ± 10 mV	VIDEO ⊘RV001/RP-73 (SP) PCM ⊘RV002/RP-73 (SP) Trigger: CN004-2/FR-40

Note: LP REC CURRENT ADJUSTMENT (RV001, RV002) is unnecessory.

8-3-23. DOC Level Adjustment

Step 1.

Note: Remove C103 on the HK-4 Board (F-6) for this adjustment. Use the sweep generator and put the marker in the 5 MHz portion. Adjust the level of maker to the level described below steps with variable volume of the sweep generator. After adjustment, solder the chip capacitor (0.047 μF) to C103 on the HK-4 Board (F-6).
Be sure to use the new capacitor. (1-163-035-00)

Connect the output of sweep generator to the point of HK-4 Board after removing C103 as described below.

HK-4 soldering side

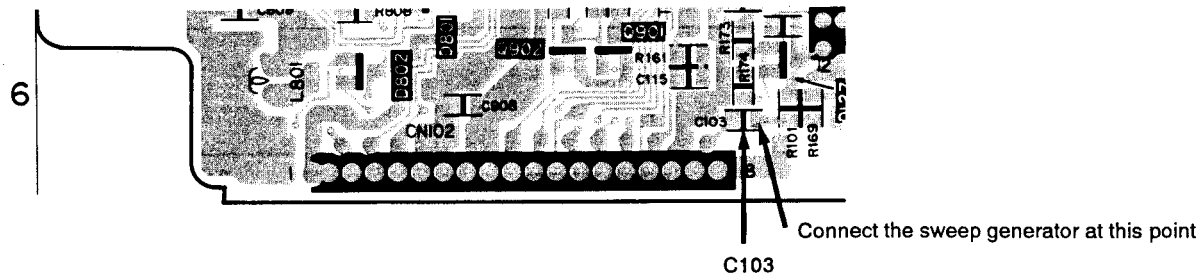

Machine condition for adjustment	Specifications	Adjustments
• VIDEO IN: color-bar signal. • Adjust the marker level of the sweep generator to meet the specification. • E-E mode	IC501-17/HK-4 (B-2) 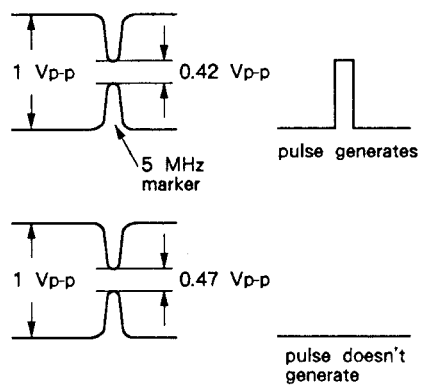	⊘ RV101/HK-4 (F-5)

- After adjustment, remove the sweep generator and solder chip capacitor to C103.

Step 2.

Use the oscilloscope in this adjustment.

Machine condition for adjustment	Specifications	Adjustments
• Supply the composite color-bar signal (Y=0.5 Vp-p, Burst=0.143 Vp-p, chroma OFF) to CN911-4 pin on the HK-4 Board (H-2).	IC501-12/HK-14 (B-2) 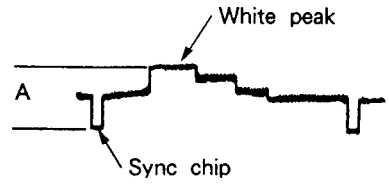 A=0 ± 15 mVp-p	⊘ RV501/HK-4 (A-2)

8-3-24. E-E Y Signal Level Adjustment

Machine condition for adjustment	Specifications	Adjustments
• VIDEO IN: color-bar signal • E-E mode	TP701/HK-4 (H-2) A=1.00 ± 0.05 Vp-p	⊘ RV702/HK-4 (H-2)

8-3-25. E-E C Signal Level Adjustment

Machine condition for adjustment	Specifications	Adjustments
• VIDEO IN: color-bar signal • E-E mode	TP801/HK-4 (H-4) A=286 ± 10 mVp-p	⊘ RV802/HK-4 (H-5)

8-3-26. JOG Direct Y Signal Level Adjustment

Machine condition for adjustment	Specifications	Adjustments
• Play back the color-bar signal portion of the alignment tape WR5-8NSE. • PAUSE mode	TP701/HK-4 (H-2) 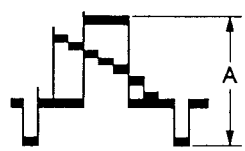 A=1.00 ± 0.05 Vp-p	⊘ RV701/HK-4 (G-2)

8-3-27. JOG Direct C Signal Level Adjustment

Machine condition for adjustment	Specifications	Adjustments
• Play back the color-bar signal portion of the alignment tape WR5-8NSE. • PAUSE mode	TP801/HK-4 (H-4) A=286 ± 10mV	⊘ RV801/HK-4 (G-5)

8-3-28. Chroma Cancel (1H) Adjustment

Machine condition for adjustment	Specifications	Adjustments
• VIDEO IN: color bar signal • E-E mode	TP203/IF-20 (A-2) 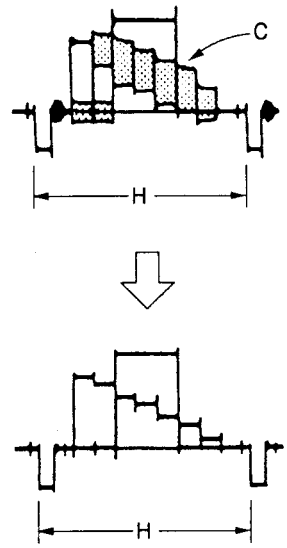 C (residual chroma component)=minimum Level=less than 25 mvp-p	⊘ RV201/IF-20 (B-1) ⊘ LV201/IF-20 (B-1)

8-3-29. Chroma Cancel (2H) Adjustment

Machine condition for adjustment	Specifications	Adjustments
• VIDEO IN: color bar signal • E-E mode	TP207/IF-20 (C-2) A=less than 20 mVp-p	⊘ RV204/IF-20 (C-2) ⊘ LV202/IF-20 (C-1)

8-3-30. DC Offset Adjustment

Machine condition for adjustment	Specifications	Adjustments
• VIDEO IN: no signal • E-E mode	+: TP208/IF-20 (C-3) –: TP209/IF-20 (C-3) 100 ± 10 mVp-p	⊘ RV205/IF-20 (C-3)

8-3-31. C Comb Cancel Adjustment

Machine condition for adjustment	Specifications	Adjustments
• VIDEO IN: color-bar signal • E-E mode	TP206/IF-20 (B-6) 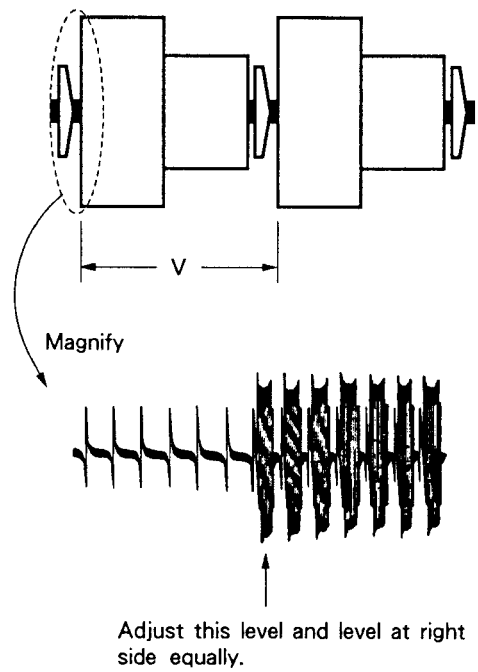 Adjust this level and level at right side equally.	⊘ RV203/IF-20 (B-2)

8-3-32. Ys Level Adjustment

Machine condition for adjustment	Specifications	Adjustments
• VIDEO IN: color-bar signal • E-E mode	TP204/IF-20 (A-3) 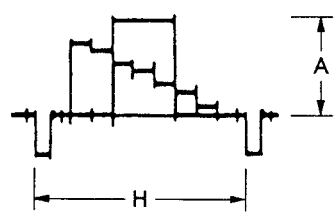 A=0.5 ± 0.02 Vp-p	⊘ RV202/IF-20 (A-3)

8-3-33. Noise Cancel +6 dB Amplifier Adjustment

Machine condition for adjustment	Specifications	Adjustments
• Play back the color-bar signal portion of alignment tape WR5-8NSE.	CH-1: TP602/IF-20 (D-5) CH-2: TP604/IF-20 (D-4) Peak level B × 2=Peak level A	⊘ RV601/IF-20 (D-5)

8-3-34. Limiter Cancel Adjustment

Machine condition for adjustment	Specifications	Adjustments
• Play back the color-bar signal portion of alignment tape WR5-8NSE.	TP603/IF-20 (E-5) 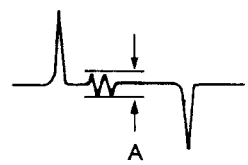 A (burst portion)=minimum	⊘ RV602/IF-20 (E-4)

8-3-35. Y Output Level Adjustment

Machine condition for adjustment	Specifications	Adjustments
• Play back the color bar signal portion of the alignment tape WR5-8NSE.	TP651/DI-11 (K-4) 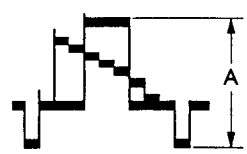 A=1.0 ± 0.1 Vp-p	⊘ RV651/DI-11 (K-4)

8-3-36. CNR Chroma Output Level Adjustment

Machine condition for adjustment	Specifications	Adjustments
• Play back the color bar signal portion of the alignment tape WR5-8NSE.	TP652/DI-11 (J-3) 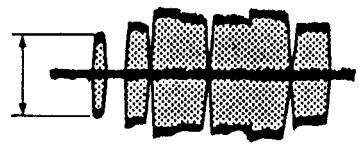 A=0.286 ± 0.01 Vp-p	⊘ RV652/DI-11 (J-4)

8-3-37. Yx Filter DIP Point Adjustment

Machine condition for adjustment	Specifications	Adjustments
• Disconnect CN901/IF-20 (C-5) and input the color-bar signal of 50 mVp-p burst at pin 1 of CN901. • PLAY mode • Turn RV706/IF-20 (G-5) fully counterclockwise.	TP705/IF-20 (G-5) 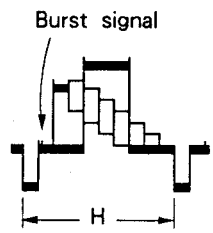 Turn RV702 and RV703 alternately and minimize the burst level.	⊘ RV702/IF-20 (H-5) ⊘ RV703/IF-20 (I-5)

8-3-38. Yx Filter C Control Level Adjustment

Machine condition for adjustment	Specifications	Adjustments
• VIDEO IN: color-bar signal • E-E mode • Set CH-1 and CH-2 of oscilloscope ranges equally.	**Step 1** CH-1: TP709/IF-20 (G-5) (AC range) CH-2: TP709/IF-20 (G-5) (AC range) Align the CH-1 and CH-2 waveforms. **Step 2** CH-1: TP709/IF-20 (G-5) (DC range) CH-2: TP711/IF-20 (G-5) (DC range) 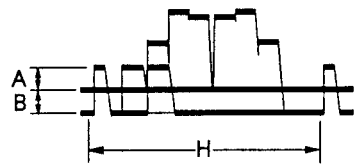 4:6 ≦ A:B ≦ 6:4	⊘ RV706/IF-20 (G-5)

8-3-39. Video Output Level Adjustment

Machine condition for adjustment	Specifications	Adjustments
• VIDEO IN: color-bar signal • E-E mode	TP706/IF-20 (I-4) 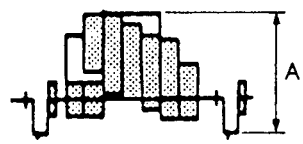 A=1.0 ± 0.05 Vp-p B=0.286 ± 0.02 Vp-p	⊘ RV704/IF-20 (I-5) ⊘ RV705/IF-20 (I-5)
	TP712/IF-20 (J-4) 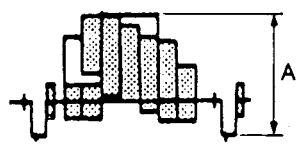 A=1.0 ± 0.05 Vp-p B=0.286 ± 0.02 Vp-p	⊘ RV707/IF-20 (J-4) ⊘ RV708/IF-20 (J-5)

8-3-40. REF V Adjustment

Machine condition for adjustment	Specifications	Adjustments
• VIDEO IN: color-bar signal • E-E mode	CH-1: TP204/IF-20 (A-3) CH-2: IC903 PIN 7/IF-20 (D-2) 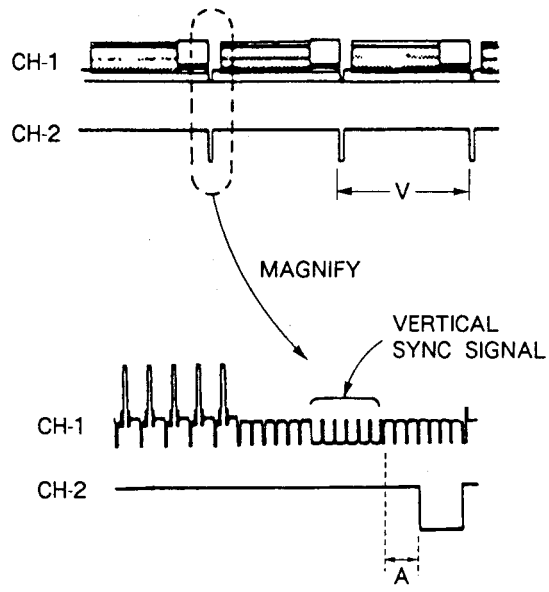 A=134.7 ± 5.0 μsec	⊘RV901/IF-20 (B-5)

8-3-41. Picture Splitting Adjustment

Machine condition for adjustment	Specifications	Adjustments
	Set RV802 and RV803 on the MD-23 board to the mechanical center position.	⊘RV802/MD-23 (A-2) ⊘RV803/MD-23 (A-2)

8-4. AUDIO SIGNAL SYSTEM ALIGNMENT

8-4-1. Equipment Required

- Oscilloscope
- Frequency counter
- Audio signal generator
- Audio level meter
- Digital voltmeter
- Alignment tape

Name (Part No.)	REC mode	Tape Type	Tape Speed	Contents	
				Video Area	PCM Area
SP operation check WR5-8NSE (8-967-995-43)	Hi8	ME	SP	VIDEO SIGNAL Color-bar 4 min. Monoscope 4 min. AUDIO SIGNAL (AFM) 400 Hz 60% mod.	AUDIO SIGNAL (PCM) 400 Hz 20 min.
LP operation check WR5-8NLE (8-967-995-52)	Hi8	ME	LP	VIDEO SIGNAL Color-bar 4 min. Monoscope 4 min. AUDIO SIGNAL (AFM) 400 Hz 60% mod.	AUDIO SIGNAL (PCM) 400 Hz 20 min.

8-4-2. PCM Master Clock Adjustment

Note: Before adjustment, remove the PA-27 board.

Machine condition for adjustment	Specifications	Adjustments
• Connect pin 14 of IC853/PD-19 (A-1) and pin 11 of CN852/PD-19 (A-2) with jumper wire. • E-E mode • After the adjustment, remove jumper wire.	IC853-8/PD-19 (A-1) 11.45 ± 0.01 MHz	⊘ RV851/PD-19 (A-2)

8-4-3. PCM Playback VCO Free-Frequency Adjustment

Note: Before adjustment, remove the PA-27 board.

Machine condition for adjustment	Specifications	Adjustments
• Connect pin 9 of CN851/PD-19 (B-1) and pin 11 of CN852/PD-19 (C-3) with jumper wire. • Connect pins 7 and 8 of CN852/PD-19 (C-3) with jumper wire. • E-E mode • After the adjustment, remove jumper wires.	IC854-8/PD-19 (A-2) 11.58 ± 0.05 MHz	⊘ RV854/PD-19 (A-2)

8-4-4. D/A Converter Level Adjustment

Machine condition for adjustment	Specifications	Adjustments
• Play back the Audio 400 Hz portion of the alignment tape WR5-8NSE.	CN001-16/PA-27 (A-2) –4.0 ± 0.2 dBs	⊘ RV032/PA-27 (A-1)

8-4-5. NR Decode Level Adjustment

Machine condition for adjustment	Specifications	Adjustments
• Play back the Audio 400 Hz portion of the alignment tape WR5-8NSE.	CN001-20/PA-27 (A-3) –14.0 ± 0.5 dBs • If adjustment value doesn't meet the specification, change the value of resistors as follows and perform adjustment again. R062 12k→13k R012 12k→13k	⊘ RV031/PA-27 (C-1)

8-4-6. A/D Converter Offset Adjustment

Machine condition for adjustment	Specifications	Adjustments
• Connect pin 8 of CN001/PA-27 (A-2) to pin 17 of CN001/PA-27 (A-2) with jumper wire. • Connect pins 15 and 18 of CN001 with jumper wire. • Connect pins 4 and 5 of CN001 with jumper wire. • REC mode (no signal input) • After adjustment, remove jumper wires.	CH-1: CN001-11/PA-27 (A-2) CH-2: CN001-9/PA-27 (A-2) 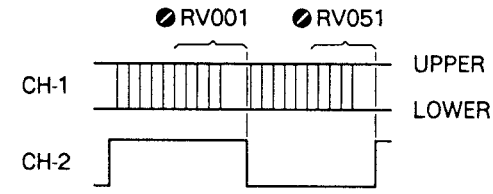 Adjust upper and lower brightnesses for the same.	L-CH ⊘ RV001/PA-27 (B-2) R-CH ⊘ RV051/PA-27 (B-1)

8-4-7. PCM REC Level Adjustment

Note: This adjustment should be performed after completion of 9-4. NR DECODED LEVEL ADJUSTMENT.

Machine condition for adjustment	Specifications	Adjustments
• AUDIO LINE IN: 400 Hz/–10 dB • Preform the self-recording/play back with a Hi8 ME tape.	L-CH: CN001-20/PA-27 (A-3) –13.5 ± 0.1 dB	L-CH ⊘ RV002/PA-27 (B-3)
	R-CH: CN001-1/PA-27 (A-1) –13.5 ± 0.1 dB	R-CH ⊘ RV052/PA-27 (B-1)

8-5. ADJUSTMENT RELATED PARTS ARRANGEMENT DIAGRAMS

RV's on the Power Supply Block Location (Component Side)

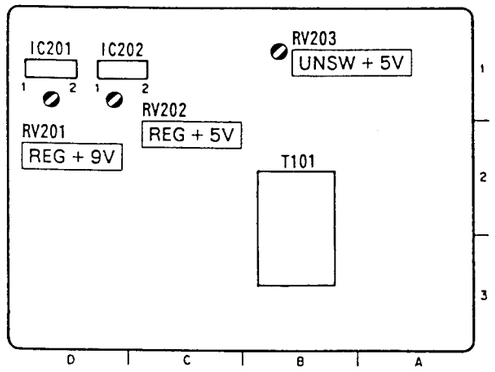

RV's on the MD-23 Board Location (Component Side)

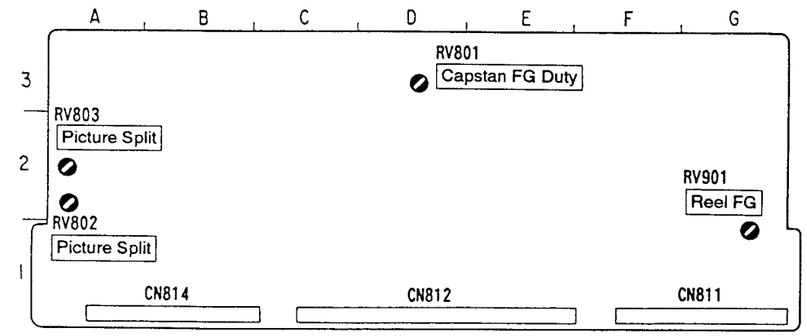

TP's on the MD-23 Board Location (Component Side)

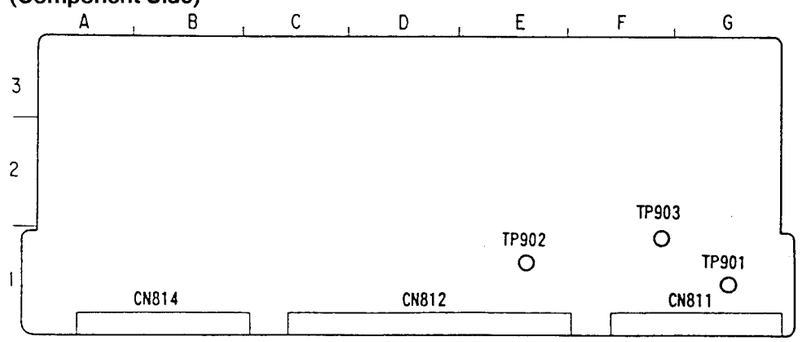

8-5. ADJUSTMENT RELATED PARTS ARRANGEMENT DIAGRAMS

RV's on the Power Supply Block Location (Component Side)

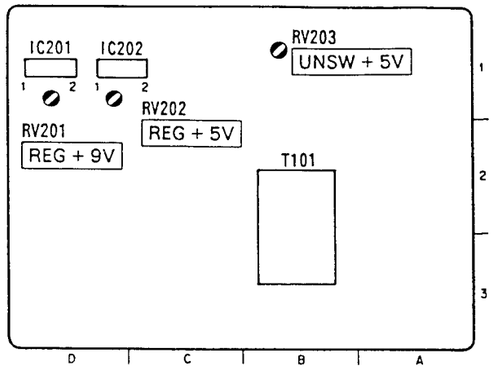

RV's on the MD-23 Board Location (Component Side)

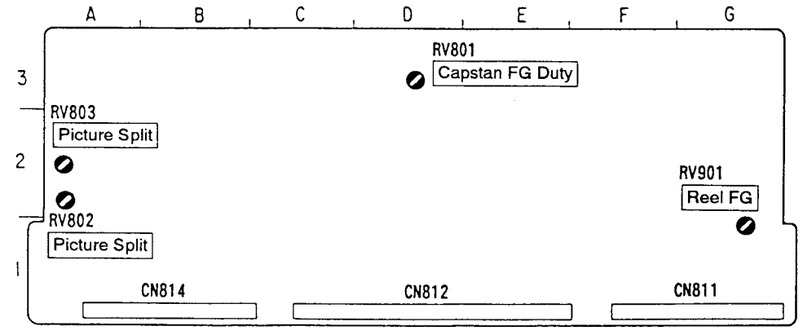

TP's on the MD-23 Board Location (Component Side)

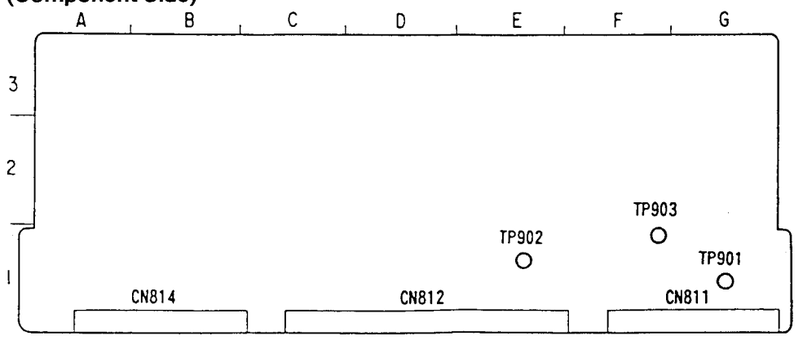

TP's on the SE-10 Board Location (Component Side)

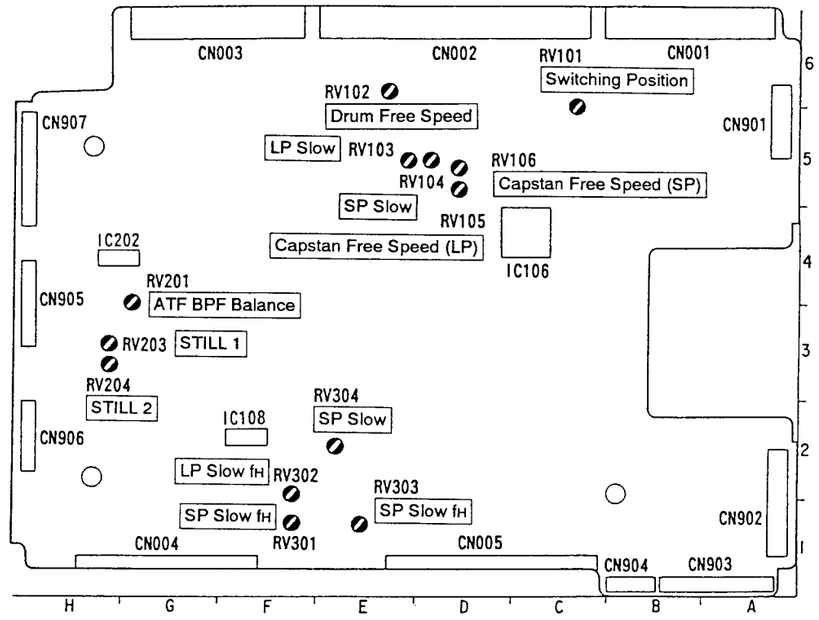

RV's on the SE-10 Board Location (Component Side)

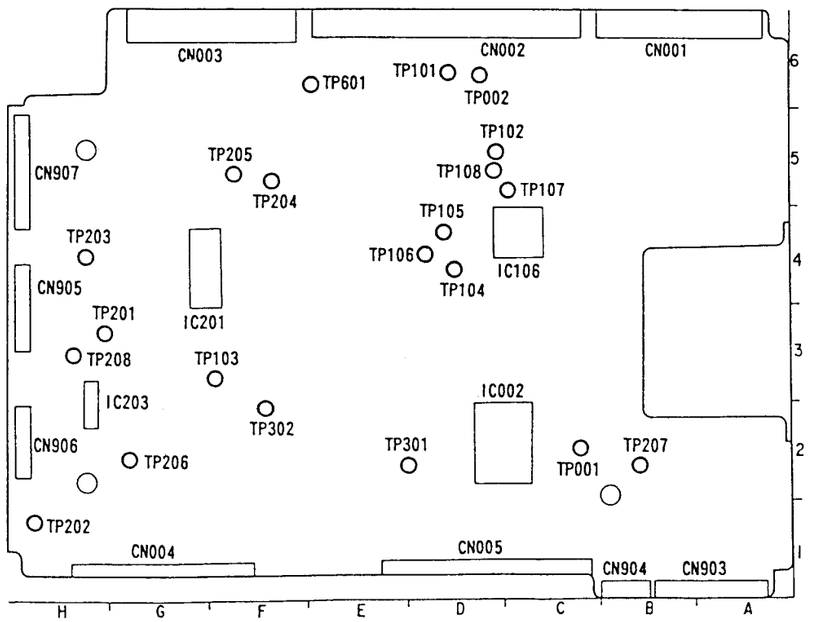

RV's on the FB-169 Board Location (Component Side)

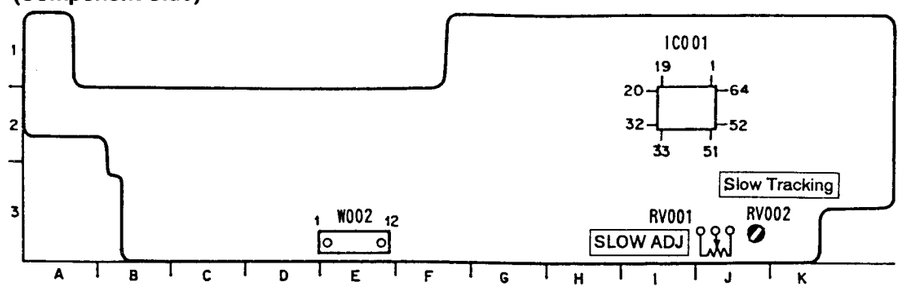

RV's on the FR-40 Board Location (Component Side)

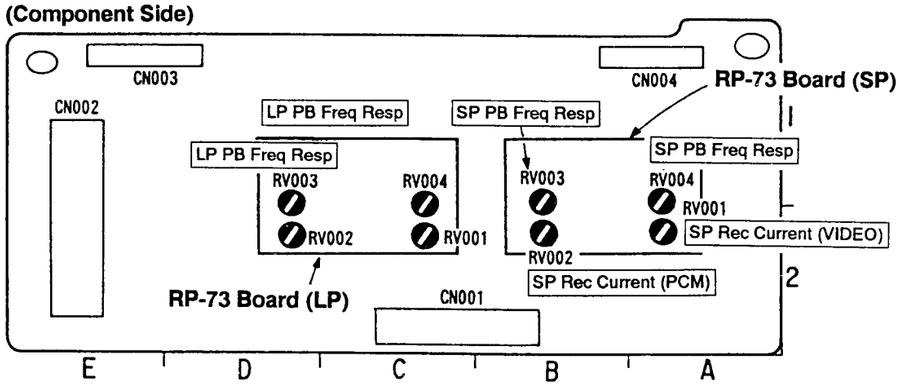

TP's on the FR-40 Board Location (Component Side)

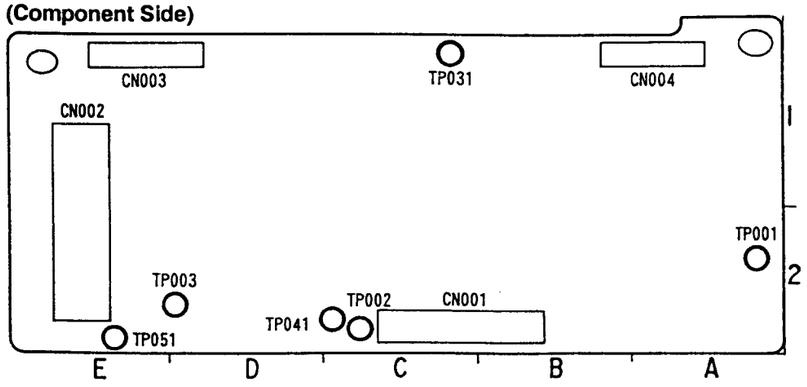

RV's on the HK-4 Board Location (Component Side)

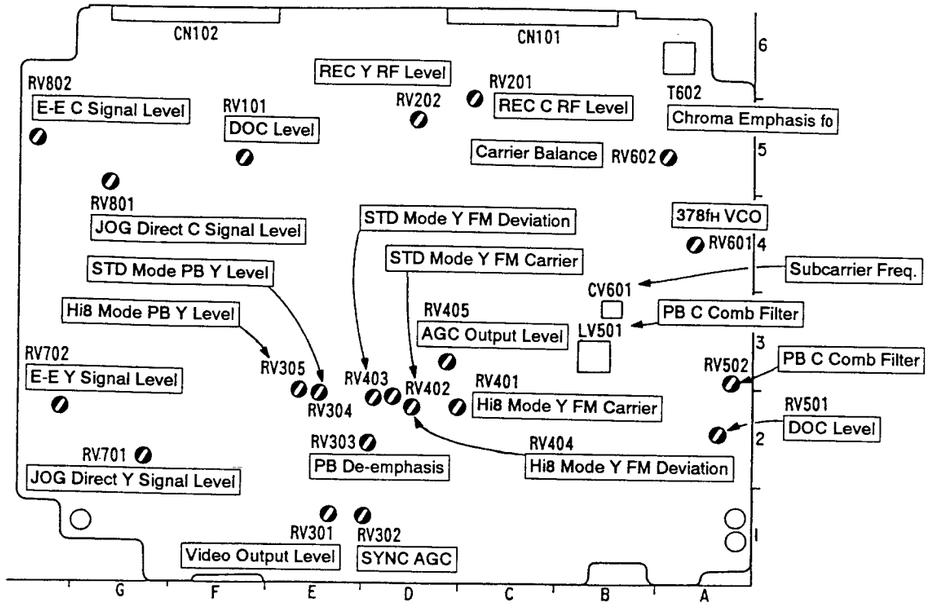

TP's on the HK-4 Board Location (Component Side)

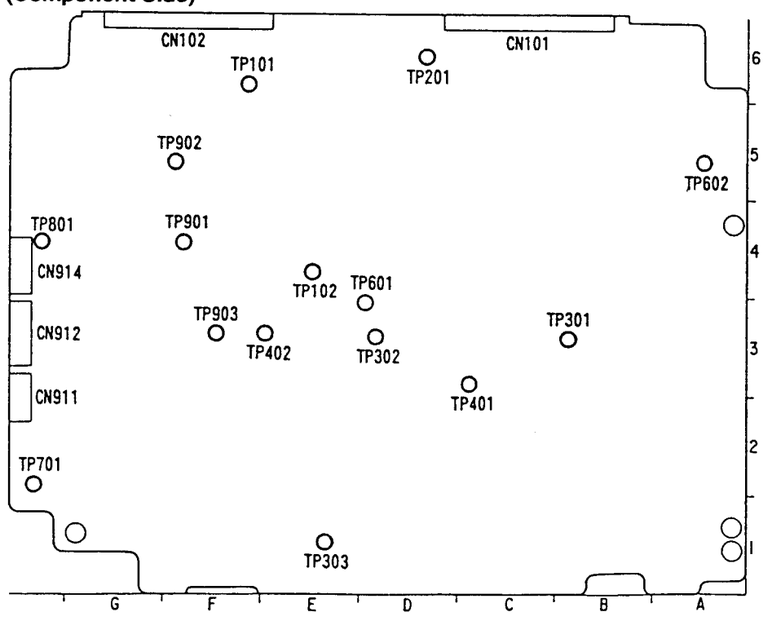

RV's on the HK-4 Board Location (Component Side)

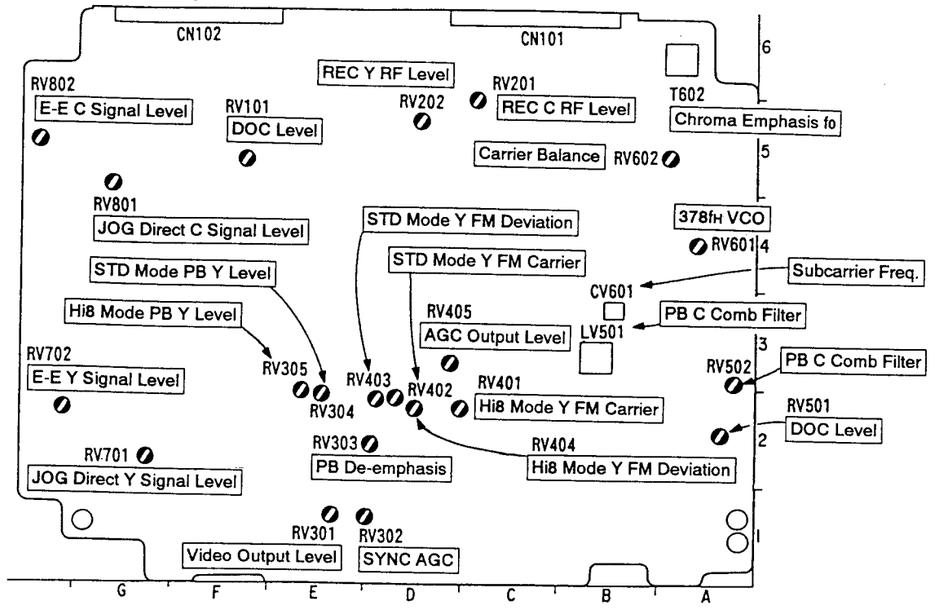

TP's on the HK-4 Board Location (Component Side)

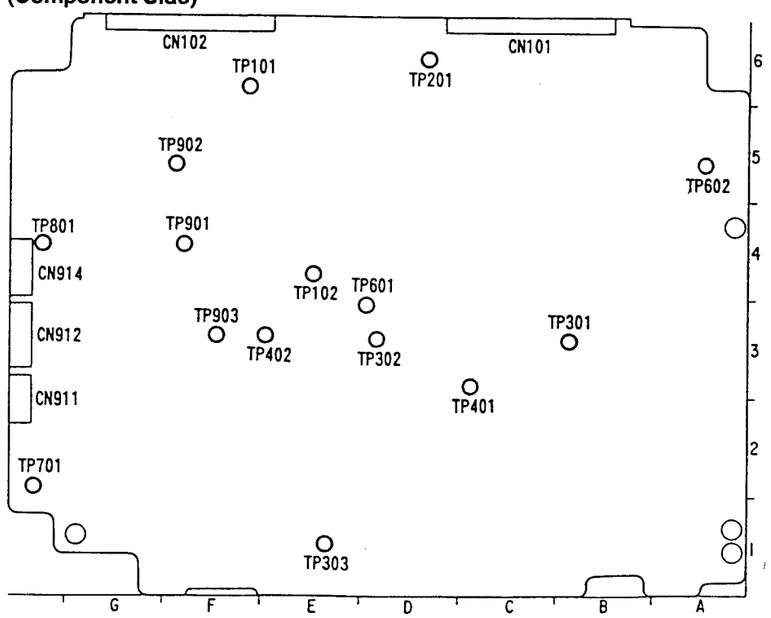

RV's on the IF-20 Board Location (Component Side)

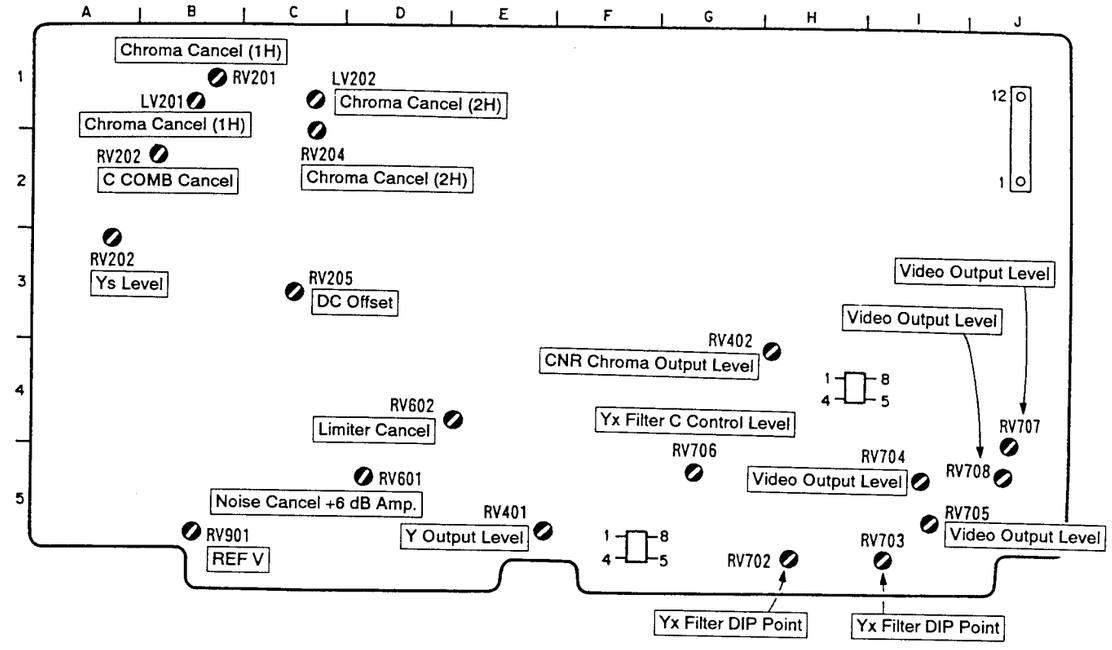

TP's on the IF-20 Board Location (Component Side)

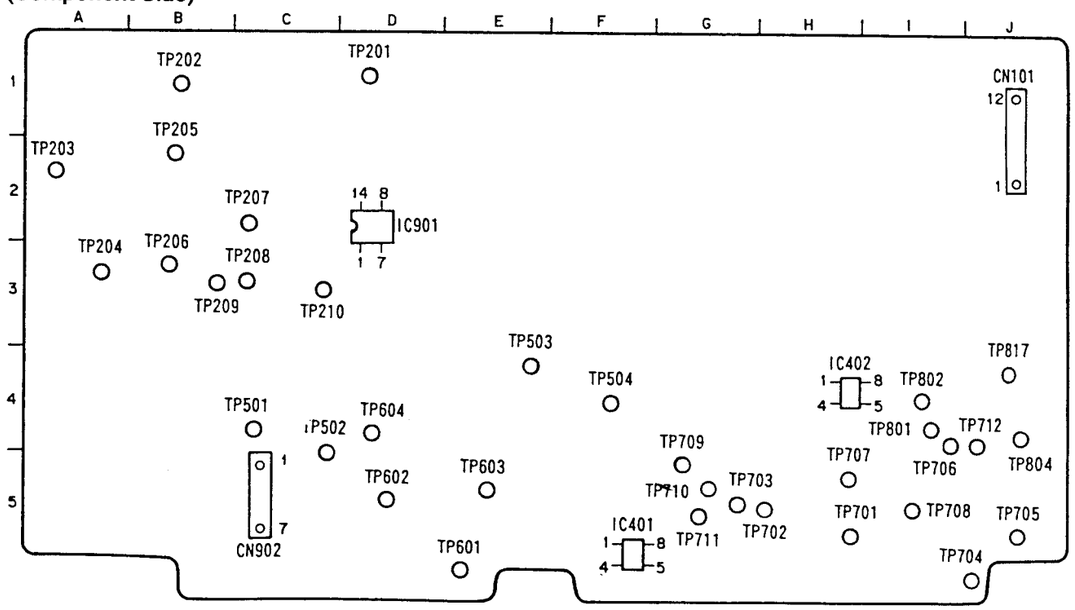

RV's on the PD-19 Board Location

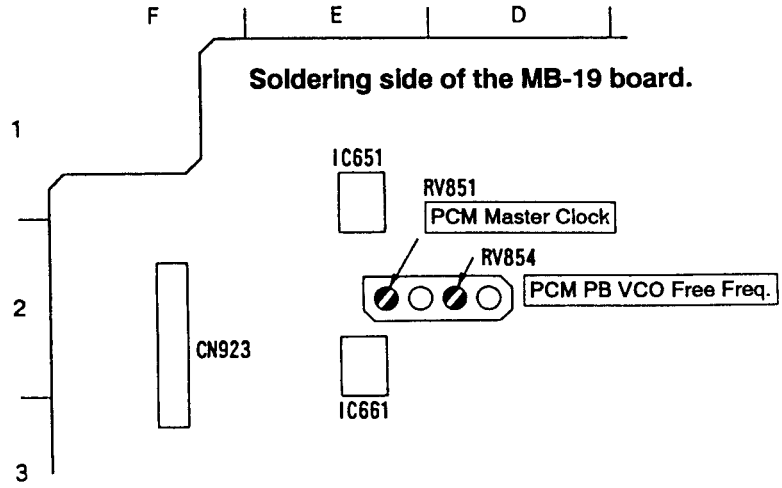
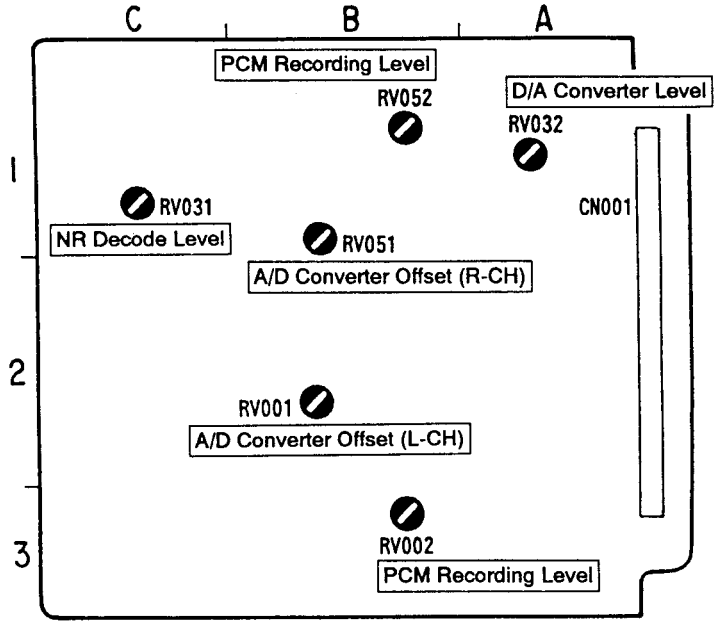
RV's on the PA-27 Board Location (Component Side)